8. EACH SETTING AND ADJUSTMENT

There is not information to be shown in this chapter.

9. EXPLODED VIEWS AND PARTS LIST

NOTES : • *Parts marked by " * " are generally unavailable because they are not in our Master Spare Parts List.*
• *The ⚠ mark found on some component parts indicates the importance of the safety factor of the part. Therefore, when replacing, be sure to use parts of identical designation.*
• *Screw adjacent to▽ mark on the product are used for disassembly.*
• *For the applying amount of lubricants or glue, follow the instructions in this manual. (In the case of no amount instructions,apply as you think it appropriate.)*

9.1 PACKING

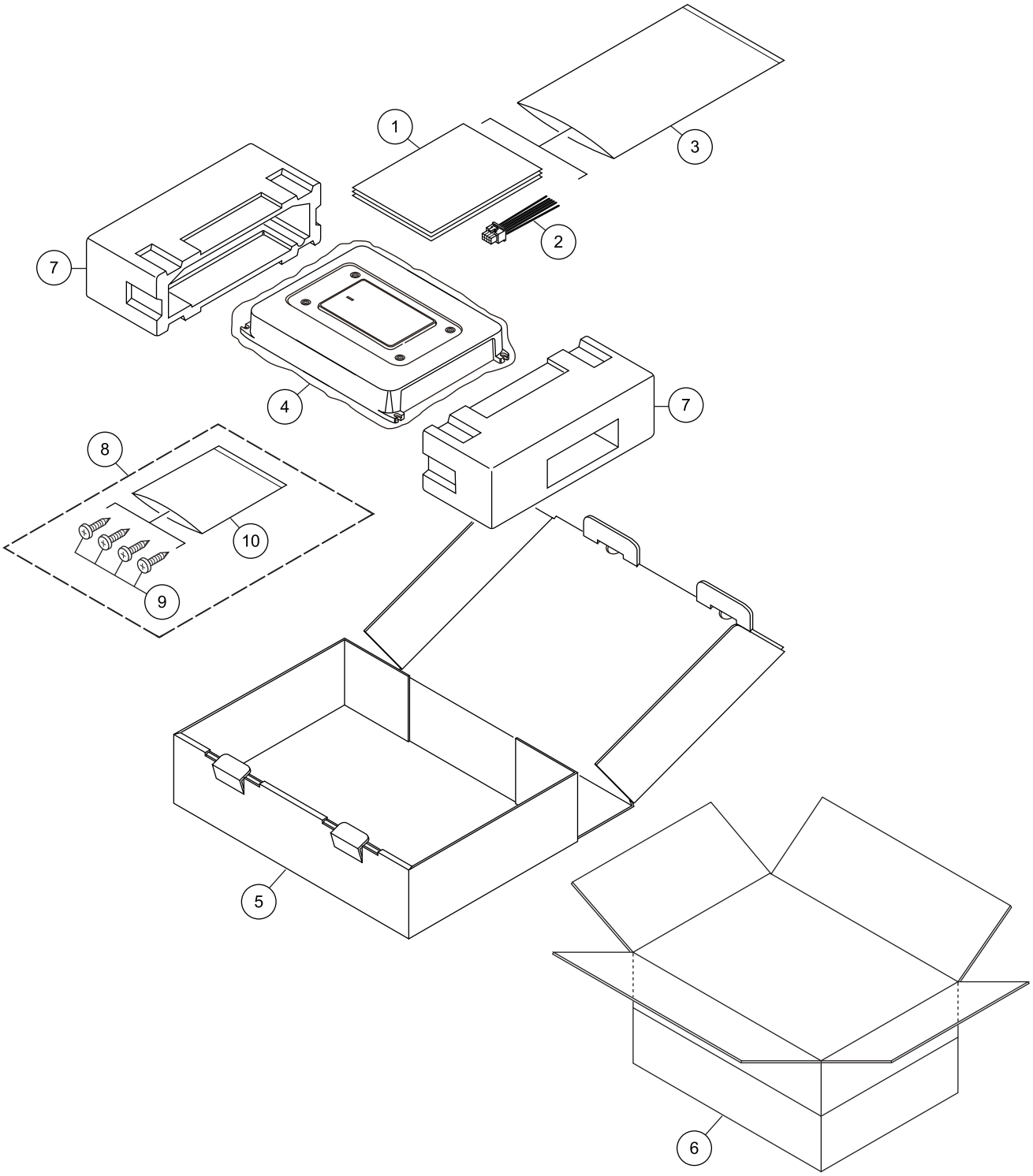

(1) PACKING SECTION PARTS LIST

Mark	No.	Description	Part No.
*	1-1	Warranty Card	See Contrast table (2)
	1-2	Owner's Manual	See Contrast table (2)
	2	Cord Assy	CZD5518
	3	Polyethylene Bag	CZE2962
	4	Polyethylene Bag	See Contrast table (2)
	5	Unit Box	See Contrast table (2)
	6	Contain Box	See Contrast table (2)
	7	Cushion	CZH6698
	8	Screw Assy	CEA5330
	9	Screw	BYC40P180FTB
*	10	Polyethylene Sheet	CNM4338

(2) CONTRAST TABLE

GM-6400T/XJ/UC, GM-6400T/XJ/EW5 and GM-6400T/XJ/ES are constructed the same except for the following:

Mark	No.	Description	GM-6400T/XJ/UC	GM-6400T/XJ/EW5	GM-6400T/XJ/ES
*	1-1	Warranty Card	CRY1276	CRY1279	Not used
	1-2	Owner's Manual	CZR5556	CZR5555	CZR5557
	4	Polyethylene Bag	CEG1351	*CZE2987	*CZE2987
	5	Unit Box	CZH6692	CZH6690	CZH6694
	6	Contain Box	CZH6693	CZH6691	CZH6695

Owner's Manual,Installation Manual

Part No.	Language
CZR5556	English, French, Spanish(Espanol)
CZR5555	English, Spanish(Espanol), German, French, Italian, Dutch, Russian
CZR5557	English, Spanish(Espanol), Portuguese(B), Arabic

9.2 EXTERIOR

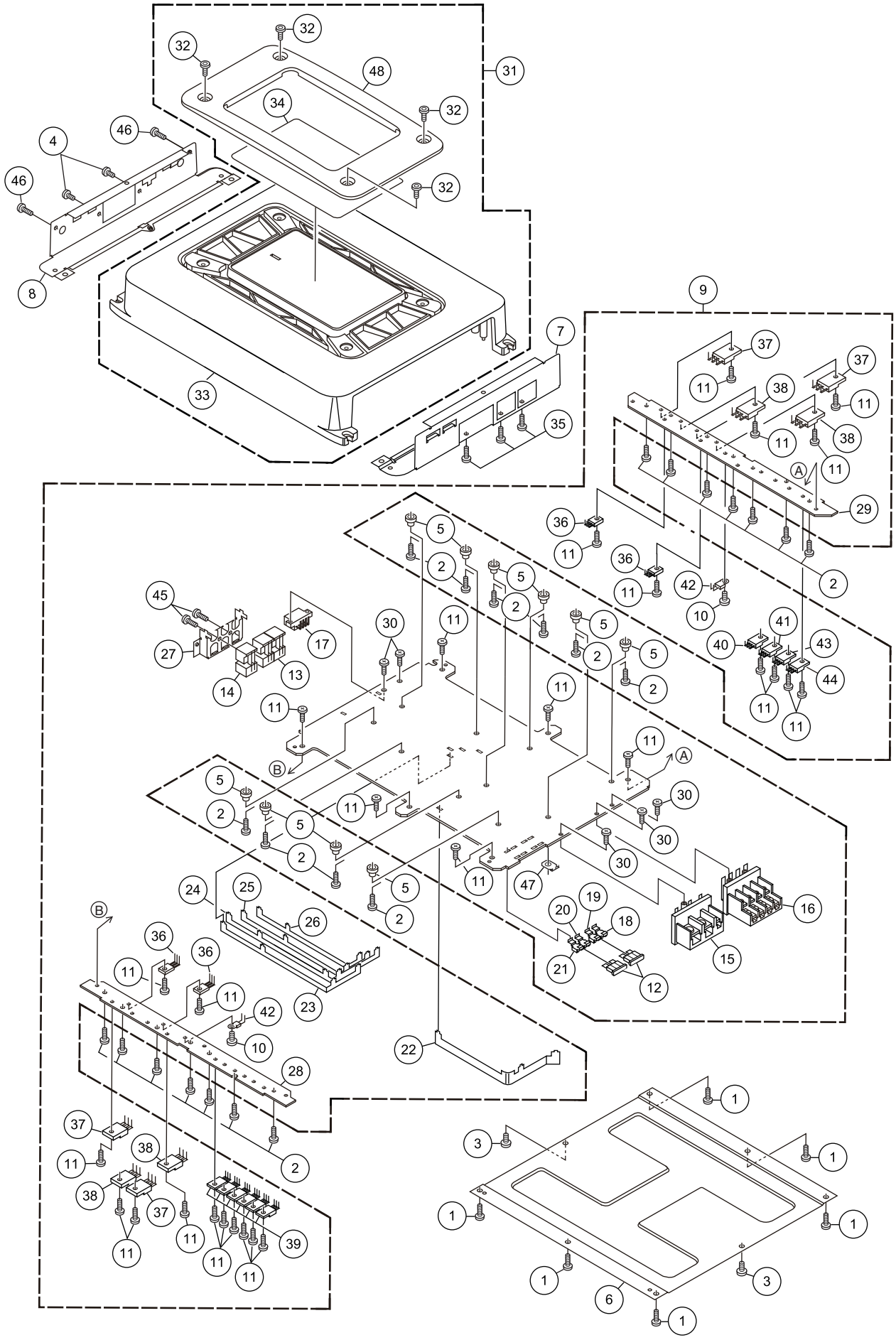

32
32
48
31
34
32
46
4
46
32
8
9
7
37
37
11
38
11
33
35
11
38
11
A
29
36
5
11
2
36
5
11
42
2
45
2
10
30
11
5
41
27
17
40
43
13
2
5
14
2
44
11
11
11
11
11
A
B
5
30
2
11
5
30
2
30
11
47
24
25
5
19
16
B
26
2
20
18
36
36
15
11
21
11
12
42
23
10
22
28
1
37
3
1
38
11
2
38
1
37
1
11
11
39
11
11
1
3
6
1

EXTERIOR SECTION PARTS LIST

Mark	No.	Description	Part No.
	1	Screw	BBZ30P100FTC
	2	Screw	BBZ30P120FTC
	3	Screw	BSZ26P060FTB
	4	Screw	BSZ30P060FTB
	5	Spacer	CZN8440
	6	Chassis	CZN8441
	7	Plate	See Contrast table (2)
	8	Plate	CZN8439
	9	Amp Unit	See Contrast table (2)
	10	Screw	BBZ30P080FTB
	11	Screw	BBZ30P100FTC
⚠	12	Fuse(25 A)	CEK1329
	13	Pin Jack(JA101)	CKB1066
	14	Pin Jack(JA102)	CKB1068
	15	Terminal(JA801)	CKE1055
	16	Terminal(JA501)	CKE1059
	17	Connector(JA103)	CKM1334
	18	Terminal(JA802)	CND2458
	19	Terminal(JA803)	CND2458
	20	Terminal(JA804)	CND2458
	21	Terminal(JA805)	CND2458
*	22	Bus Bar(1)	CZN8425
*	23	Bus Bar(2)	CZN8426
*	24	Bus Bar(5)	CZN8429
*	25	Bus Bar(4)	CZN8428
*	26	Bus Bar(3)	CZN8427
	27	Holder	CZN8431
*	28	Heat Sink	CZN8432
*	29	Heat Sink	CZN8433
	30	Screw	PPZ30P100FNN
	31	Case Unit	See Contrast table (2)
	32	Screw	BBZ30H060FTB
*	33	Heat Sink	CZN8416
	34	Plate Assy	See Contrast table (2)
	35	Screw	PPZ30P100FTB
	36	Transistor(Q515,516,615,616)	KTC3114
	37	Transistor(Q517,518,617,618)	2SD2439
	38	Transistor(Q519,520,619,620)	2SB1588
	39	Transistor(Q805,806,807,808,809,810)	FKV550N
	40	Transistor(Q811)	KTC2026
	41	Transistor(Q812)	KTA1046
	42	Thermistor(TH701,702)	CCX1065
	43	Diode(D801)	FML22S
	44	Diode(D802)	FML22R
	45	Screw	PPZ30P100FTB
	46	Screw	BBZ30P080FTB
	47	Earth Terminal(KN801)	CZK2969
	48	Plate	CZN8417

(2) CONTRAST TABLE

GM-6400T/XJ/UC, GM-6400T/XJ/EW5 and GM-6400T/XJ/ES are constructed the same except for the following:

Mark	No.	Description	GM-6400T/XJ/UC	GM-6400T/XJ/EW5	GM-6400T/XJ/ES
	7	Plate	CZN8437	CZN8436	CZN8436
	9	Amp Unit	CZW5580	CZW5579	CZW5579
	31	Case Unit	CZX6649	CZX6648	CZX6650
	34	Plate Assy	CZX6642	CZX6641	CZX6642

12. ELECTRICAL PARTS LIST

NOTE:

- *Parts whose parts numbers are omitted are subject to being not supplied.*
- *The part numbers shown below indicate chip components.*

  Chip Resistor

  RS1/◯S◯◯◯J,RS1/◯◯S◯◯◯J

  Chip Capacitor (except for CQS.....)

  CKS....., CCS....., CSZS.....
- *The ⚠ mark found on some component parts indicates the importance of the safety factor of the part. Therefore, when replacing, be sure to use parts of identical designation.*
- *Meaning of the figures and others in the parentheses in the parts list.*

  Example) IC 301 is on the point (face A, 91 of x-axis, and 111 of y-axis) of the corresponding PC board.

  IC 301 (A, 91, 111) IC NJM2068V
- *The expression of the unit in this manual is shown by u instead of µ. Please do not make a mistake.*

Unit Number : CZW5580(UC)

Unit Number : CZW5579(EW5,ES)

Unit Name : Amp Unit

A

Unit Number : CZW5580(UC)

Unit Number : CZW5579(EW5,ES)

Unit Name : Amp Unit

MISCELLANEOUS

Circuit Symbol and No.		Part No.
IC 101	IC	NJM2068MD
IC 102	IC	NJM2068MD
IC 201	IC	NJM2068MD
IC 202	IC	NJM2068MD
IC 301	IC	NJM4558MD
IC 302	IC	NJM4558MD
IC 401	IC	NJM4558MD
IC 402	IC	NJM4558MD
IC 701	IC	NJM4558MD
IC 801	IC	UPC494GS
Q 301	Transistor	2SC2412K
Q 302	Transistor	2SC2412K
Q 401	Transistor	2SC2412K
Q 402	Transistor	2SC2412K
Q 501	Transistor	2SA1037K
Q 502	Transistor	2SA1037K
Q 503	Transistor	2SC2412K
Q 504	Transistor	2SC2412K
Q 505	Transistor	2SA1037K
Q 506	Transistor	2SA1037K
Q 507	Transistor	2SC2412K
Q 508	Transistor	2SC2412K
Q 509	Transistor	2SC2412K
Q 510	Transistor	2SC2412K
Q 511	Transistor	2SA1038S
Q 512	Transistor	2SA1038S
Q 513	Transistor	2SC2389S
Q 514	Transistor	2SC2389S
Q 515	Transistor	KTC3114
Q 516	Transistor	KTC3114
Q 517	Transistor	2SD2439
Q 518	Transistor	2SD2439
Q 519	Transistor	2SB1588
Q 520	Transistor	2SB1588
Q 521	Transistor	KTC3911S
Q 522	Transistor	KTC3911S
Q 601	Transistor	2SA1037K
Q 602	Transistor	2SA1037K
Q 603	Transistor	2SC2412K
Q 604	Transistor	2SC2412K
Q 605	Transistor	2SA1037K
Q 606	Transistor	2SA1037K
Q 607	Transistor	2SC2412K
Q 608	Transistor	2SC2412K
Q 609	Transistor	2SC2412K
Q 610	Transistor	2SC2412K
Q 611	Transistor	2SA1038S
Q 612	Transistor	2SA1038S
Q 613	Transistor	2SC2389S
Q 614	Transistor	2SC2389S
Q 615	Transistor	KTC3114
Q 616	Transistor	KTC3114
Q 617	Transistor	2SD2439
Q 618	Transistor	2SD2439
Q 619	Transistor	2SB1588
Q 620	Transistor	2SB1588
Q 621	Transistor	KTC3911S
Q 622	Transistor	KTC3911S
Q 701	Transistor	2SC2412K
Q 702	Transistor	2SC2412K
Q 703	Transistor	KTA1504S
Q 704	Transistor	KTC3875S
Q 705	Transistor	KN2907AS
Q 706	Transistor	KTA1504S
Q 707	Transistor	KTC3875S
Q 708	Transistor	DTA114TUA

Circuit Symbol and No.		Part No.
Q 709	Transistor	KTA1504S
Q 710	Transistor	KTC3875S
Q 711	Transistor	KTC3875S
Q 750	Transistor	KRA102S
Q 760	Transistor	KTA1504S
Q 801	Transistor	2SC2411K
Q 802	Transistor	2SA1036K
Q 803	Transistor	2SA1036K
Q 804	Transistor	2SC2411K
Q 805	Transistor	FKV550N
Q 806	Transistor	FKV550N
Q 807	Transistor	FKV550N
Q 808	Transistor	FKV550N
Q 809	Transistor	FKV550N
Q 810	Transistor	FKV550N
Q 811	Transistor	KTC2026
Q 812	Transistor	KTA1046
D 101	Diode	1SS355
D 102	Diode	1SS355
D 103	Diode	1SS355
D 104	Diode	1SS355
D 105	Diode	1SS355
D 106	Diode	1SS355
D 107	Diode	1SS355
D 108	Diode	1SS355
D 201	Diode	1SS355
D 202	Diode	1SS355
D 203	Diode	1SS355
D 204	Diode	1SS355
D 205	Diode	1SS355
D 206	Diode	1SS355
D 207	Diode	1SS355
D 208	Diode	1SS355
D 501	Diode	KDS4148U
D 502	Diode	KDS4148U
D 503	Diode	KDS4148U
D 504	Diode	KDS4148U
D 505	Diode	MA111
D 506	Diode	MA111
D 601	Diode	KDS4148U
D 602	Diode	KDS4148U
D 603	Diode	KDS4148U
D 604	Diode	KDS4148U
D 605	Diode	MA111
D 606	Diode	MA111
D 701	Diode	UDZS7R5(B)
D 702	Diode	UDZS16(B)
D 703	Diode	KDS4148U
D 704	Diode	KDZ8R2V(Y)
D 705	Diode	KDS4148U
D 706	Diode	KDS4148U
D 707	Diode	KDS4148U
D 708		UDZS3R6(B)
D 709	Diode	KDS4148U
D 710	Diode	KDS4148U
D 711	Diode	KDS4148U
D 751	Diode	UDZS6R8(B)
D 752	Diode	UDZS4R7(B)
D 801	Diode	FML22S
D 802	Diode	FML22R

Circuit Symbol and No.		Part No.
D 803	Diode	EP05FA20
D 804	Diode	EP05FA20
D 805	Diode	MTZJ16(B)
D 806	Diode	MTZJ16(B)
D 841	Diode	RM4Z-LFJ4
D 842	Chip LED	NHSB046AT
L 801	Choke Coil 45 uH	CZT2939
L 802	Choke Coil 105 uH	CZT2938
L 803	Choke Coil 105 uH	CZT2938
T 801	Transformer	CZT2941
TH701	Thermistor	CCX1065
TH702	Thermistor	CCX1065
TH703	Posistor	CZC2982
S 101	Switch(4CH/2CH)	CZS2930
S 301	Switch(A LPF/HPF)	CZS2929
S 401	Switch(B LPF/HPF)	CZS2929
S 801	Switch(BFC)(EW5,ES)	CZS2927
VR301	Variable Resistor 10 kohm	CZC2975
VR401	Variable Resistor 10 kohm	CZC2975

RESISTORS

R 101		RS1/16S471J
R 102		RS1/16S471J
R 103		RS1/16S223J
R 104		RS1/16S223J
R 105	10 kohm	CCN1152
R 106	10 kohm	CCN1152
R 107	10 kohm	CCN1152
R 108	10 kohm	CCN1152
R 109	10 kohm	CCN1152
R 110	10 kohm	CCN1152
R 111	10 kohm	CCN1152
R 112	10 kohm	CCN1152
R 117		RS1/16S103J
R 118		RS1/16S103J
R 119		RS1/8S101J
R 120		RS1/8S101J
R 121		RS1/8S683J
R 122		RS1/8S683J
R 131		RS1/10S2R2J
R 132		RS1/10S2R2J
R 201		RS1/16S471J
R 202		RS1/16S471J
R 203		RS1/16S223J
R 204		RS1/16S223J
R 205	10 kohm	CCN1152
R 206	10 kohm	CCN1152
R 207	10 kohm	CCN1152
R 208	10 kohm	CCN1152
R 209	10 kohm	CCN1152
R 210	10 kohm	CCN1152
R 211	10 kohm	CCN1152
R 212	10 kohm	CCN1152
R 217		RS1/16S103J
R 218		RS1/16S103J
R 219		RS1/8S101J
R 220		RS1/8S101J
R 221		RS1/8S683J
R 222		RS1/8S683J
R 231		RS1/10S2R2J

Circuit Symbol and No.	Part No.	Circuit Symbol and No.		Part No.
R 232	RS1/10S2R2J	R 532		RS1/8S100J
R 301	RS1/16S752J	R 533	0.1 kohm(2 W)	CZC2974
R 302	RS1/16S752J	R 534	0.1 kohm(2 W)	CZC2974
R 303	RS1/16S133J	R 535	0.1 kohm(2 W)	CZC2974
R 304	RS1/16S133J	R 536	0.1 kohm(2 W)	CZC2974
R 305	RS1/16S912J	R 537		RS1/16S473J
R 306	RS1/16S912J	R 538		RS1/16S473J
R 307	RS1/16S912J	R 539		RD1/2PM100J
R 308	RS1/16S912J	R 540		RD1/2PM100J
R 309	RS1/16S222J	R 541		RS1/16S473J
R 310	RS1/16S222J	R 542		RS1/16S473J
R 311	RS1/16S680J	R 543		RS1/16S564J
R 312	RS1/16S680J	R 544		RS1/16S564J
R 313	RS1/16S153J	R 601		RS1/16S103J
R 314	RS1/16S153J	R 602		RS1/16S103J
R 401	RS1/16S752J	R 603		RS1/16S333J
R 402	RS1/16S752J	R 604		RS1/16S333J
R 403	RS1/16S133J	R 605		RS1/16S331J
R 404	RS1/16S133J	R 606		RS1/16S331J
R 405	RS1/16S912J	R 607		RS1/16S331J
R 406	RS1/16S912J	R 608		RS1/16S331J
R 407	RS1/16S912J	R 609		RS1/16S681J
R 408	RS1/16S912J	R 610		RS1/16S681J
R 409	RS1/16S222J	R 611		RS1/16S681J
R 410	RS1/16S222J	R 612		RS1/16S681J
R 411	RS1/16S680J	R 613		RS1/16S471J
R 412	RS1/16S680J	R 614		RS1/16S471J
R 413	RS1/16S153J	R 615		RS1/10S473J
R 414	RS1/16S153J	R 616		RS1/10S473J
R 501	RS1/16S103J	R 617		RS1/16S223J
R 502	RS1/16S103J	R 618		RS1/16S223J
R 503	RS1/16S333J	R 619		RS1/8S101J
R 504	RS1/16S333J	R 620		RS1/8S101J
R 505	RS1/16S331J	R 621		RS1/16S471J
R 506	RS1/16S331J	R 622		RS1/16S471J
R 507	RS1/16S331J	R 623		RS1/16S472J
R 508	RS1/16S331J	R 624		RS1/16S472J
R 509	RS1/16S681J	R 625		RS1/16S222J
R 510	RS1/16S681J	R 626		RS1/16S222J
R 511	RS1/16S681J	R 627		RS1/8S101J
R 512	RS1/16S681J	R 628		RS1/8S101J
R 513	RS1/16S471J	R 629		RS1/8S100J
R 514	RS1/8S471J	R 630		RS1/8S100J
R 515	RS1/10S473J	R 631		RS1/8S100J
R 516	RS1/10S473J	R 632		RS1/8S100J
R 517	RS1/16S223J	R 633	0.1 kohm(2 W)	CZC2974
R 518	RS1/16S223J	R 634	0.1 kohm(2 W)	CZC2974
R 519	RS1/8S101J	R 635	0.1 kohm(2 W)	CZC2974
R 520	RS1/8S101J	R 636	0.1 kohm(2 W)	CZC2974
R 521	RS1/16S471J	R 637		RS1/16S473J
R 522	RS1/16S471J	R 638		RS1/16S473J
R 523	RS1/16S472J	R 639		RD1/2PM100J
R 524	RS1/16S472J	R 640		RD1/2PM100J
R 525	RS1/16S222J	R 641		RS1/16S473J
R 526	RS1/16S222J	R 642		RS1/16S473J
R 527	RS1/8S101J	R 643		RS1/16S564J
R 528	RS1/8S101J	R 644		RS1/16S564J
R 529	RS1/8S100J	R 701	2.2 kohm(1/4 W)	CZC2980
R 530	RS1/8S100J	R 702		RS1/16S473J
R 531	RS1/8S100J	R 703		RS1/16S103J

Circuit Symbol and No.		Part No.
R 704		RS1/16S103J
R 705		RS1/16S332J
R 706		RS1/16S472J
R 707		RS1/16S222J
R 708		RS1/16S472J
R 709	560 ohm(1/4 W)	CZC2981
R 710		RS1/16S393J
R 711		RS1/16S393J
R 712		RS1/16S153J
R 713		RS1/16S102J
R 714		RS1/16S103J
R 715		RS1/16S152J
R 716		RS1/16S332J
R 717		RS1/16S101J
R 718		RS1/16S103J
R 719		RS1/16S103J
R 720		RS1/16S223J
R 721		RS1/16S472J
R 722		RS1/16S223J
R 723		RS1/10S222J
R 724		RS1/16S183J
R 725		RS1/16S102J
R 726		RS1/16S153J
R 727		RS1/10S221J
R 728		RS1/16S223J
R 729		RS1/16S103J
R 731		RS1/16S563J
R 732		RS1/16S123J
R 733		RS1/16S472J
R 734		RS1/16S333J
R 735		RS1/16S123J
R 736		RS1/16S102J
R 737		RS1/16S331J
R 738		RS1/16S473J
R 742		RS1/16S334J
R 750		RS1/16S513J
R 751		RS1/16S473J
R 752		RS1/16S332J
R 753		RS1/16S182J
R 754		RS1/16S202J
R 755		RS1/16S564J
R 760		RS1/16S222J
R 761		RS1/16S221J
R 801		RS1/16S153J
R 802	(EW5,ES)	RS1/16S105J
R 803		RS1/16S332J
R 804		RS1/16S332J
R 805		RS1/16S472J
R 806		RS1/16S472J
R 807		RS1/16S472J
R 808		RS1/16S473J
R 809		RS1/16S102J
R 810		RS1/16S222J
R 811		RS1/16S184J
R 812		RS1/16S183J
R 813		RD1/2PM121J
R 814		RD1/2PM121J
R 815		RD1/2PM121J
R 817		RD1/2PM121J
R 818		RD1/2PM121J
R 819		RD1/2PM121J
R 820		RS1/16S472J
R 821		RS1/16S472J
R 822		RD1/2PM100J
R 823		RD1/2PM100J
R 824		RD1/2PM220J
R 825		RD1/2PM220J
R 826		RD1/2PM220J
R 827		RD1/2PM181J
R 828		RD1/2PM181J
R 831	2.2 kohm(1/4 W)	CZC2980
R 832	2.2 kohm(1/4 W)	CZC2980
R 833		RS1/16S102J
R 834		RS1/16S132J

CAPACITORS

C 101	CCSRCH331J50
C 102	CCSRCH331J50
C 105	CCSRCH470J50
C 106	CCSRCH470J50
C 107	CCSRCH470J50
C 108	CCSRCH470J50
C 109	CFTLA223J50
C 110	CFTLA223J50
C 111	CEAT330M16
C 112	CEAT330M16
C 113	CCSRCH221J50
C 114	CCSRCH221J50
C 201	CCSRCH331J50
C 202	CCSRCH331J50
C 205	CCSRCH470J50
C 206	CCSRCH470J50
C 207	CCSRCH470J50
C 208	CCSRCH470J50
C 209	CFTLA223J50
C 210	CFTLA223J50
C 211	CEAT330M16
C 212	CEAT330M16
C 213	CCSRCH221J50
C 214	CCSRCH221J50
C 301	CFTLA224J50
C 302	CFTLA224J50
C 303	CFTLA224J50
C 304	CFTLA224J50
C 305	CFTLA274J50
C 306	CFTLA274J50
C 307	CFTLA154J50
C 308	CFTLA154J50
C 401	CFTLA224J50
C 402	CFTLA224J50
C 403	CFTLA224J50
C 404	CFTLA224J50
C 405	CFTLA274J50
C 406	CFTLA274J50
C 407	CFTLA154J50
C 408	CFTLA154J50
C 501	CEAT101M16
C 502	CEAT101M16
C 503	CCSRCH101J50

Circuit Symbol and No.	Part No.
C 504	CCSRCH101J50
C 505	CCSRCH471J50
C 506	CCSRCH471J50
C 507	CEAT101M16
C 508	CEAT101M16
C 509	CCSRCH220J50
C 510	CCSRCH220J50
C 511	CCSRCH220J50
C 512	CCSRCH220J50
C 513	CCSRCH220J50
C 514	CCSRCH220J50
C 515	CFTLA223J50
C 516	CFTLA223J50
C 517	CCSRCH220J50
C 518	CCSRCH220J50
C 519	CCSRCH220J50
C 520	CCSRCH220J50
C 521	CCSRCH220J50
C 522	CCSRCH220J50
C 523	CCSRCH220J50
C 524	CCSRCH220J50
C 525	CKSRYB333K50
C 526	CKSRYB333K50
C 527	CQMA102J50
C 528	CQMA102J50
C 531	CKSRYB103K50
C 532	CKSRYB103K50
C 533	CCSRCH470J50
C 534	CCSRCH470J50
C 601	CEAT101M16
C 602	CEAT101M16
C 603	CCSRCH101J50
C 604	CCSRCH101J50
C 605	CCSRCH471J50
C 606	CCSRCH471J50
C 607	CEAT101M16
C 608	CEAT101M16
C 609	CCSRCH220J50
C 610	CCSRCH220J50
C 611	CCSRCH220J50
C 612	CCSRCH220J50
C 613	CCSRCH220J50
C 614	CCSRCH220J50
C 615	CFTLA223J50
C 616	CFTLA223J50
C 617	CCSRCH220J50
C 618	CCSRCH220J50
C 619	CCSRCH220J50
C 620	CCSRCH220J50
C 621	CCSRCH220J50
C 622	CCSRCH220J50
C 623	CCSRCH220J50
C 624	CCSRCH220J50
C 625	CKSRYB333K50
C 626	CKSRYB333K50
C 627	CQMA102J50
C 628	CQMA102J50
C 631	CKSRYB103K50
C 632	CKSRYB103K50
C 633	CCSRCH470J50

Circuit Symbol and No.		Part No.
C 634		CCSRCH470J50
C 701		CCSRCH222J50
C 702		CKSRYB103K50
C 703		CEJQ100M50
C 704		CEAT101M16
C 705		CEANP470M16
C 706		CKSRYB104K50
C 707		CEJQ220M16
C 708		CEJQ220M16
C 709		CEAT331M25
C 710		CKSRYB103K50
C 711		CEAT221M16
C 801		CCSRCH102J50
C 802		CEAT101M16
C 803		CKSRYB103K50
C 804		CKSRYB105K10
C 805		CEAT221M16
C 806		CFTLA564J50
C 807		CKSRYB224K16
C 808		CKSRYB472K50
C 809		CKSRYB472K50
C 810	3 300 uF/16 V	CZC2977
C 811	3 300 uF/16 V	CZC2977
C 812		CCSRCH222J50
C 813		CCSRCH102J50
C 814		CCSRCH102J50
C 815		CEAT221M35
C 816		CEAT221M35
C 819	3 300 uF/35 V	CZC2978
C 820	3 300 uF/35 V	CZC2978
C 821	3 300 uF/35 V	CZC2978
C 822	3 300 uF/35 V	CZC2978
C 823		CEAT470M25
C 824		CEAT470M25
C 825		CEAT470M25
C 826		CEAT470M25
C 827		CKSRYB333K50
C 828		CKSRYB333K50
C 829		CKSRYB333K50
C 830		CKSRYB333K50
C 831		CCSRCH222J50
C 841		CFTLA224J50
C 843		CCSQCH103J50