PACKING

(X, M4 Type)

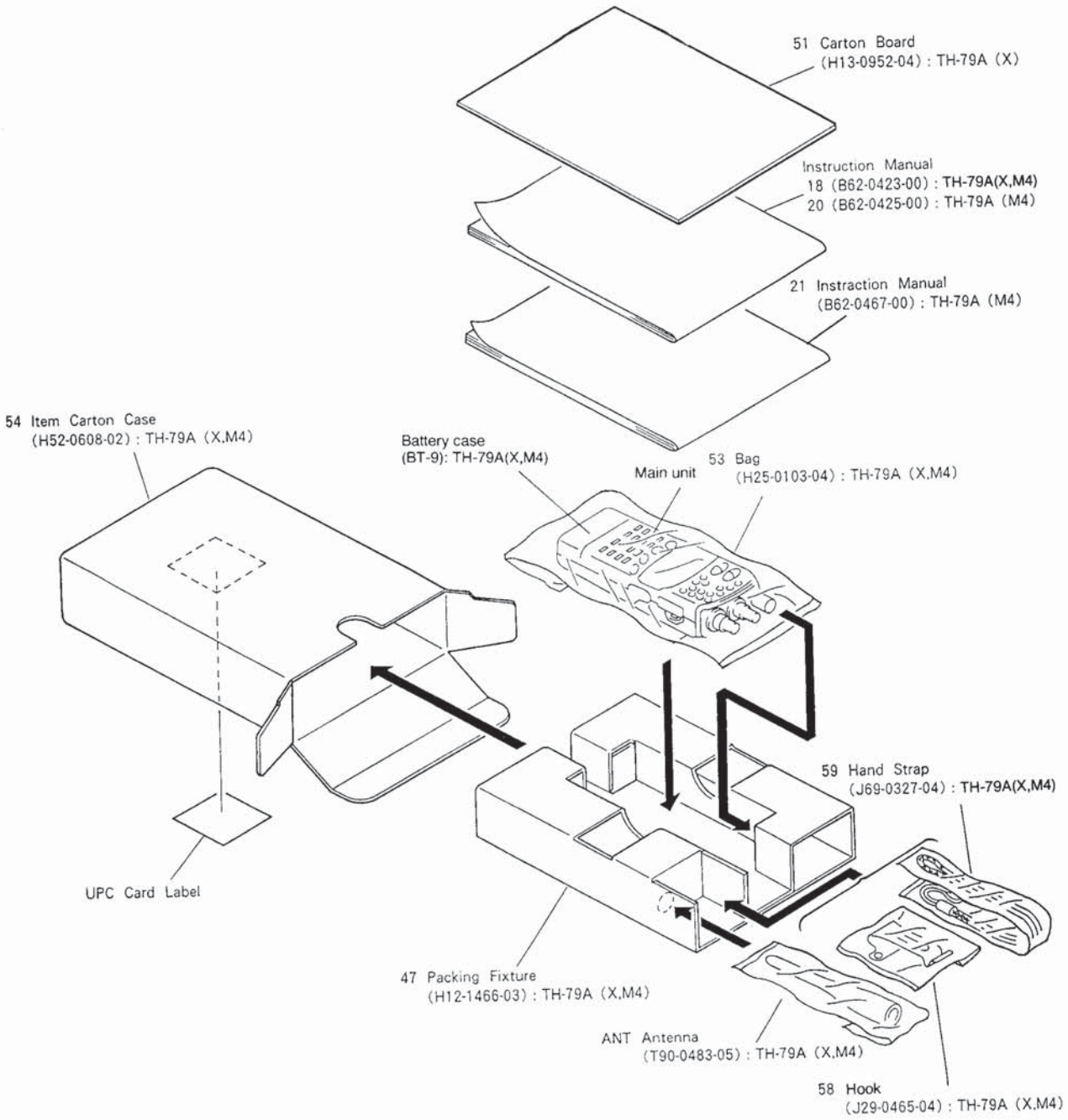

PACKING

(EXCEPT X,M4 Type)

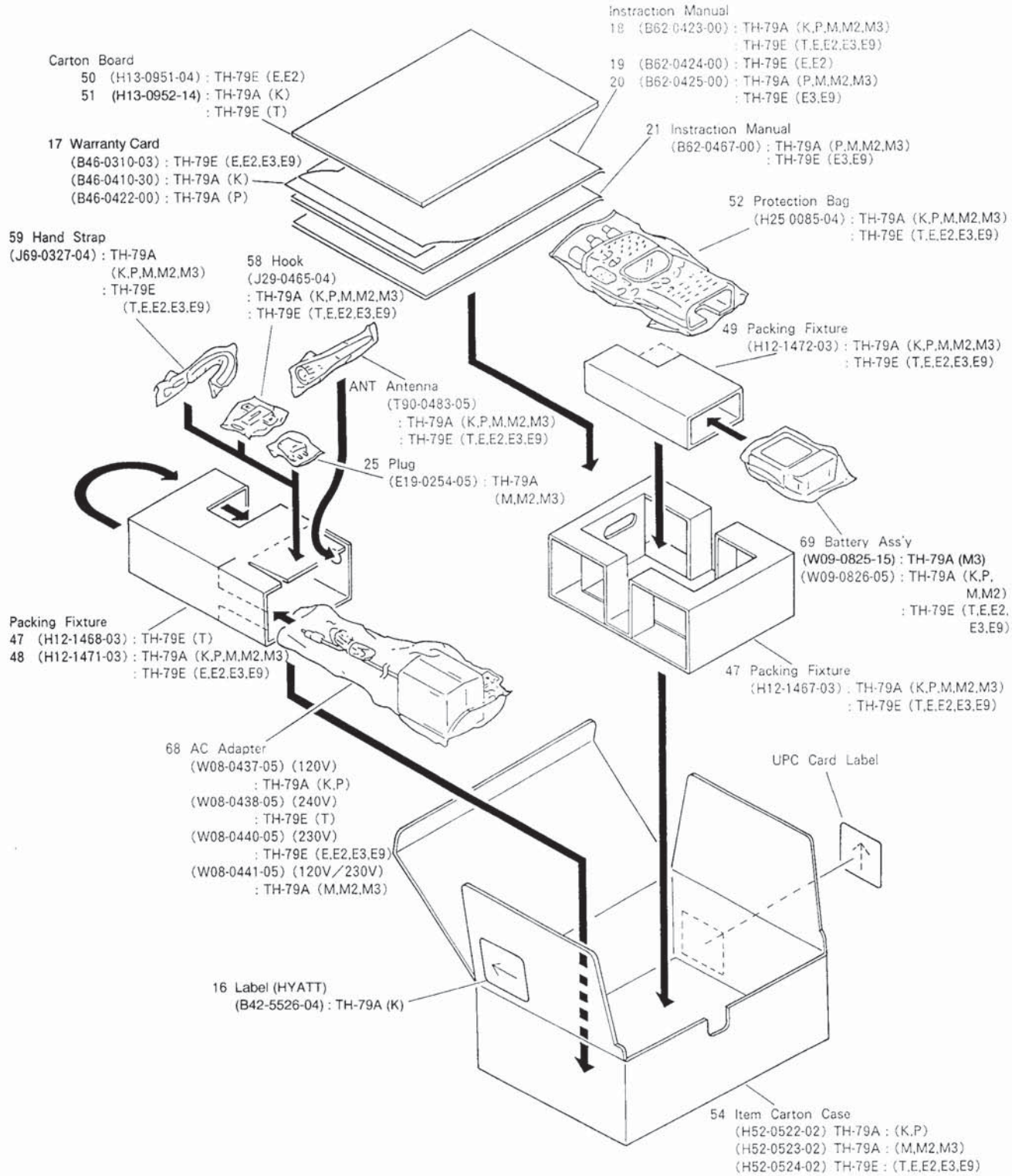

EXPLODED VIEW

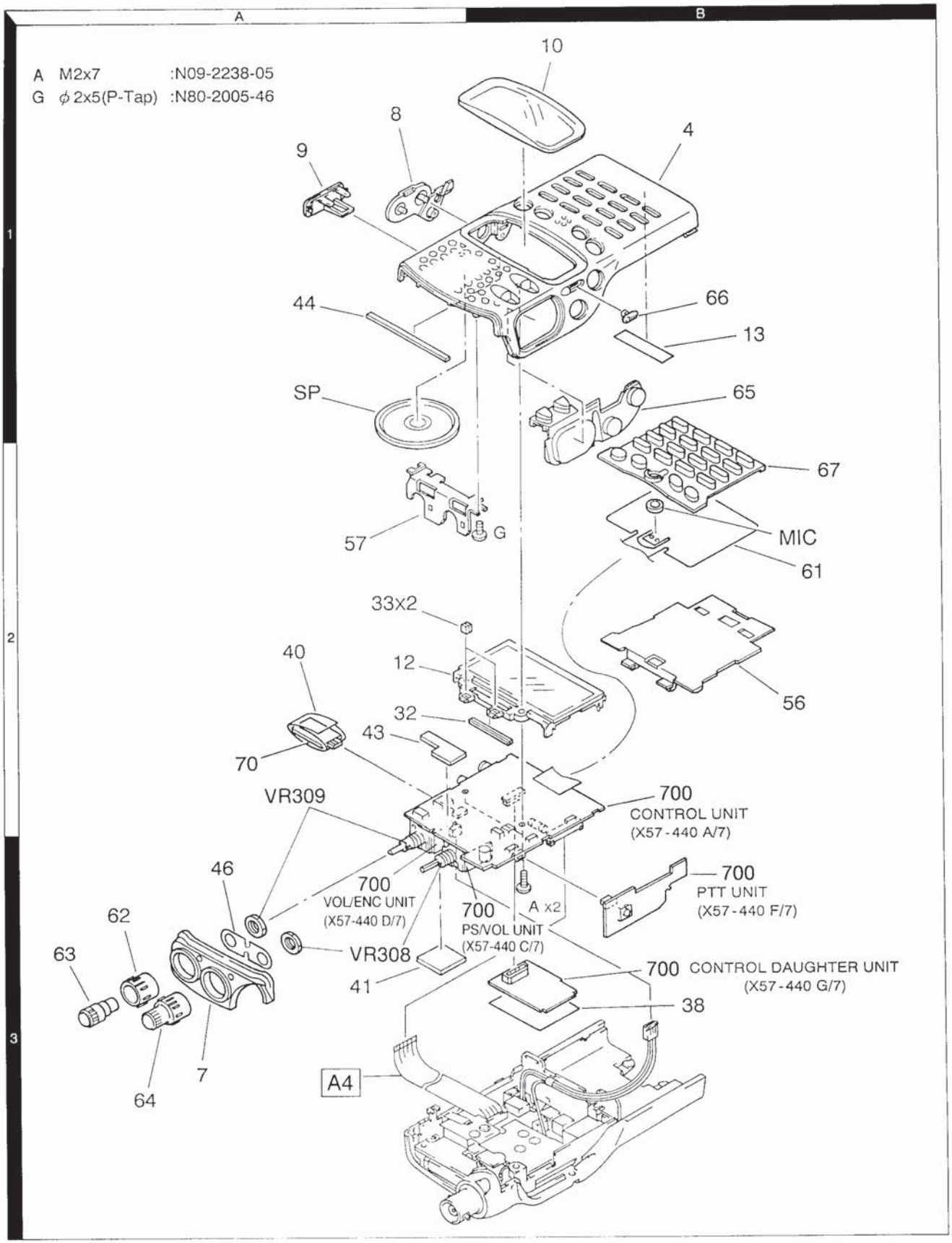

Parts with the exploded numbers larger than 700 are not supplied.

TH-79 A/E

EXPLODED VIEW

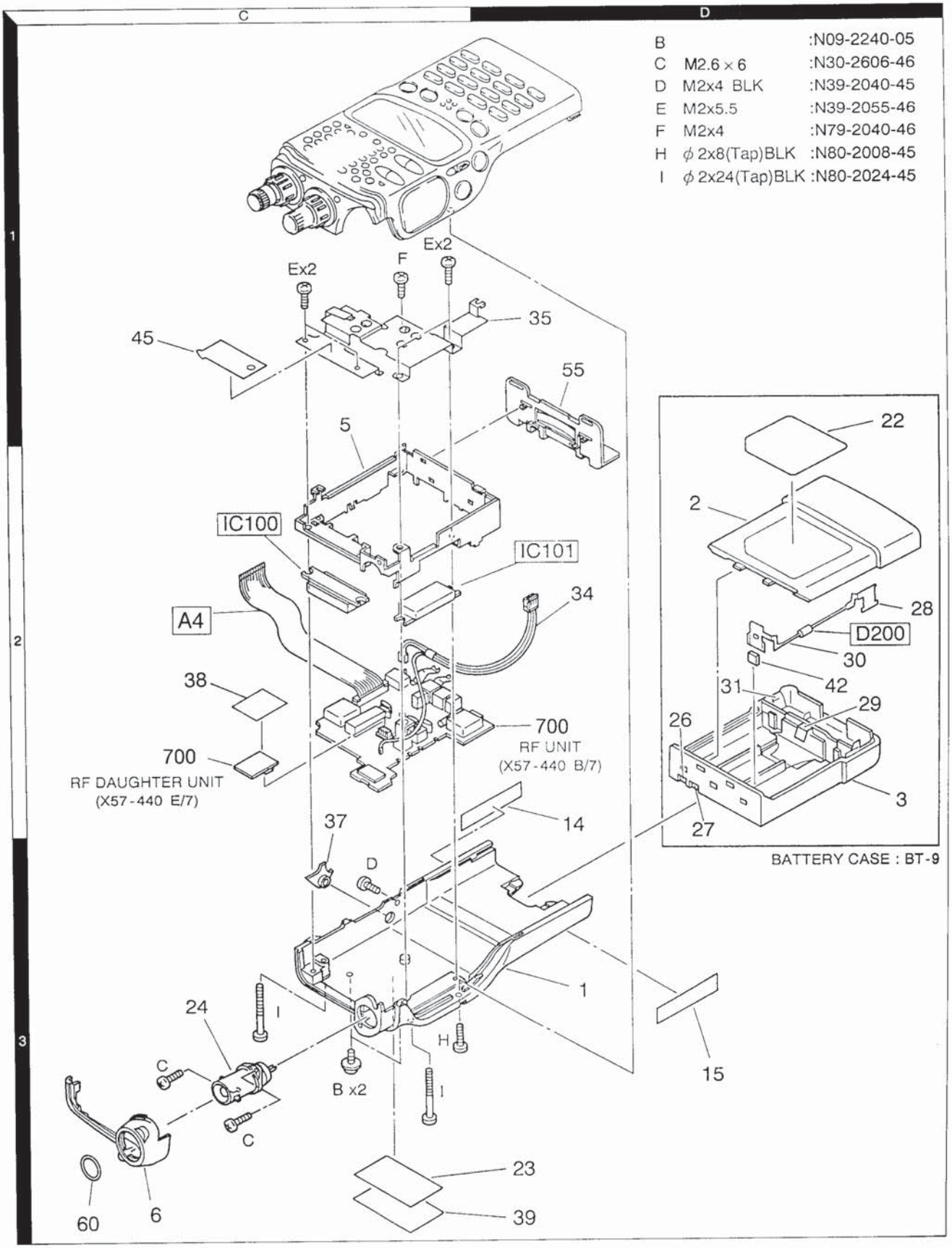

Parts with the exploded numbers larger than 700 are not supplied.

TH-79 A/E

PARTS LIST

* New Parts
Parts without Parts No. are not supplied.
Les articles non mentionnés dans le Parts No. ne sont pas fournis.
Teile ohne Parts No. werden nicht geliefert.

TH-79 A/E

Ref. No. 参照番号	Address 位置	New Parts 新	Parts No. 部品番号	Description 部品名／規格	Destination 仕向	Remarks 備考
TH-79 A/E						
1	3D	*	A01-2089-02	METALLIC CABINET(REAR)		
2	2D		A02-1784-03	PLASTIC CABINET (BT-9 FRONT)	M4X	
3	2D		A02-1785-02	PLASTIC CABINET (BT-9 REAR)	M4X	
4	1B	*	A02-1806-03	PLASTIC CABINET ASSY	KP	
4	1B	*	A02-1807-03	PLASTIC CABINET ASSY	MM2M3	
4	1B	*	A02-1807-03	PLASTIC CABINET ASSY	M4X	
4	1B	*	A02-1844-03	PLASTIC CABINET ASSY	TEE2	
4	1B	*	A02-1844-03	PLASTIC CABINET ASSY	E3E9	
5	1C	*	A13-1610-02	FRAME		
6	3C	*	A62-0334-02	PANEL (REAR)		
7	3A	*	A62-0348-13	PANEL ASSY (FRONT)		
8	1A	*	B09-0342-03	CAP (MIC/SP)		
9	1A	*	B09-0343-03	CAP (CTCSS)		
10	1B	*	B10-1214-24	FRONT GLASS		
-		*	B11-1106-04	REFRECTOR (ON AIR)		
12	2A	*	B38-0716-05	LCD ASSY		
13	1B		B42-3343-04	S/NO LABEL		
14	2D		B42-3394-14	LABEL (FCC)	K	
15	3D		B42-5074-04	LABEL (NI-CD)	K	
16	-		B42-5526-04	LABEL (HYATT)	K	
17	-		B46-0310-03	WARRANTY CARD :ACSY	E E2E3	
17	-		B46-0310-03	WARRANTY CARD :ACSY	E9	
17	-		B46-0410-30	WARRANTY CARD :ACSY	K	
17	-		B46-0422-00	WARRANTY CARD :ACSY	P	
18	-	*	B62-0423-00	INSTRUCTION MANUAL :ACSY		
19	-	*	B62-0424-00	INSTRUCTION MANUAL :ACSY	E E2	
20	-	*	B62-0425-00	INSTRUCTION MANUAL :ACSY	M M2M3	
20	-	*	B62-0425-00	INSTRUCTION MANUAL :ACSY	M4PE3	
20	-	*	B62-0425-00	INSTRUCTION MANUAL :ACSY	E9	
21	-	*	B62-0467-00	INSTRUCTION MANUAL :ACSY	M M2M3	
21	-	*	B62-0467-00	INSTRUCTION MANUAL :ACSY	M4PE3	
21	-	*	B62-0467-00	INSTRUCTION MANUAL :ACSY	E9	
22	2D		B72-0572-14	MODEL NAME PLATE (BT-9)	M4X	
23	3D	*	B72-0648-04	MODEL NAME PLATE	KP	
23	3D	*	B72-0649-04	MODEL NAME PLATE	M M2M3	
23	3D	*	B72-0649-04	MODEL NAME PLATE	M4X	
23	3D	*	B72-0650-04	MODEL NAME PLATE	TEE2E3	
23	3D		B72-0651-14	MODEL NAME PLATE	E9	
24	3C		E04-0181-05	RF COAXIAL CABLE RECEPTACLE		
25	-		E19-0254-05	PLUG :ACSY	M M2M3	
26	2D		E23-0944-04	TERMINAL (BT-9)	M4X	
27	2D		E23-0945-04	TERMINAL (BT-9)	M4X	
28	2D		E23-0946-04	TERMINAL (BT-9)	M4X	
29	2D		E23-0947-04	TERMINAL (BT-9)	M4X	
30	2D		E23-0948-04	TERMINAL (BT-9)	M4X	
31	2D		E23-0949-04	TERMINAL (BT-9)	M4X	
32	2A	*	E29-1123-05	INTER CONNECTOR (LCD ASSY)		
33	2A	*	E29-1124-05	INTER CONNECTOR (LCD ASSY)		
34	2D	*	E37-0424-05	LEAD WIRE WITH CONNECTOR		
35	1D	*	F10-2107-33	SHIELDING COVER (P MODULE)		
-			F20-1110-04	INSULATING SHEET(RF DAUGHTER)		

PARTS LIST

* New Parts
Parts without Parts No. are not supplied.
Les articles non mentionnes dans le Parts No. ne sont pas fournis.
Teile ohne Parts No. werden nicht geliefert.

TH-79 A/E

Ref. No. 参照番号	Address 位置	New Parts 新	Parts No. 部品番号	Description 部品名／規格	Destination 仕向	Remarks 備考
37	2C	*	F20-1145-04	INSULATING SHEET(DC IN)		
38	3B	*	F20-1155-04	INSULATING SHEET(DAUGHTER)		
-		*	F20-1159-04	INSULATING SHEET(L27,FRAME)		
39	3D		G11-0701-04	SHEET	E9	
40	2A	*	G11-0722-04	SHEET	KP	
41	3A		G13-1307-04	CUSHION		
42	2D		G13-1375-04	CUSHION (BT-9)	M4X	
43	2A	*	G13-1467-04	CUSHION (LED)		
44	1A	*	G13-1469-14	CUSHION (PANEL)		
45	1C	*	G13-1474-04	CUSHION (PANEL)		
46	3A	*	G53-0769-04	PACKING (VOL/ENC)		
47	-	*	H12-1466-03	PACKING FIXTURE	M4X	
47	-	*	H12-1467-03	PACKING FIXTURE	KM M2	
47	-	*	H12-1467-03	PACKING FIXTURE	M3TPE	
47	-	*	H12-1467-03	PACKING FIXTURE	E2E3E9	
47	-	*	H12-1468-03	PACKING FIXTURE	T	
48	-	*	H12-1471-03	PACKING FIXTURE	KM M2	
48	-	*	H12-1471-03	PACKING FIXTURE	M3PE	
48	-	*	H12-1471-03	PACKING FIXTURE	E2E3E9	
49	-	*	H12-1472-03	PACKING FIXTURE	KM M2	
49	-	*	H12-1472-03	PACKING FIXTURE	M3TPE	
49	-	*	H12-1472-03	PACKING FIXTURE	E2E3E9	
50	-	*	H13-0951-04	CARTON BOARD	E E2	
51	-	*	H13-0952-14	CARTON BOARD	KTX	
52	-		H25-0085-04	BAG	KM M2	
52	-		H25-0085-04	BAG	M3TPE	
52	-		H25-0085-04	BAG	E2E3E9	
53	-		H25-0103-04	BAG	M4X	
54	-	*	H52-0522-02	ITEM CARTON CASE	KP	
54	-	*	H52-0523-02	ITEM CARTON CASE	M M2M3	
54	-	*	H52-0524-02	ITEM CARTON CASE	TE E2	
54	-	*	H52-0524-02	ITEM CARTON CASE	E3E9	
54	-	*	H52-0608-02	ITEM CARTON CASE	M4X	
55	1D	*	J19-1552-03	HOLDER		
56	2B	*	J19-1553-13	HOLDER (KEY TOP)		
57	2A	*	J21-4456-04	HARDWARE FIXTURE(VOL/ENC)		
58	-		J29-0465-04	HOOK :ACSY		
59	-		J69-0327-04	HAND STRAP :ACSY		
60	3C	*	J69-0333-05	RING (BNC)		
61	2B	*	J82-0030-05	PRINTED FLAXIBLE BOARD		
62	3A	*	K29-4906-04	KNOB (VOL)		
63	3A	*	K29-4907-04	KNOB (ENC)		
64	3A	*	K29-4908-04	KNOB (VOL/PWR)		
65	1B	*	K29-4909-02	KNOB (PTTetc)		
66	1B	*	K29-4910-04	KNOB (LOCK)		
67	2B	*	K29-4912-03	KNOB (KEY TOP)		
A	3B	*	N09-2238-05	SCREW (M2x7)		
B	3C	*	N09-2240-05	SCREW (BELT HOOK)		
C	3C		N30-2606-46	PAN HEAD MACHINE SCREW(BNC)		
D	3C		N39-2040-45	PAN HEAD MACHINE SCREW(CASE)		
E	1C		N39-2055-46	PAN HEAD MACHINE SCREW(PCB)		
F	1C		N79-2040-46	SCREW (RF)		

TH-79 A/E

PARTS LIST

× New Parts
Parts without Parts No. are not supplied.
Les articles non mentionnes dans le Parts No. ne sont pas fournis.
Teile ohne Parts No. werden nicht geliefert.

TH-79 A/E
CTCSS UNIT (X52-3290-00) : TSU-8

Ref. No. 参照番号	Address 位置	New Parts 新	Parts No. 部品番号	Description 部品名／規格	Destination 仕向	Remarks 備考
G	2B		N80-2005-46	SCREW		
H	3C		N80-2008-45	SCREW (CASE)		
I	3C	*	N80-2024-45	SCREW (CASE)		
SP	1A	*	T07-0317-05	SPEAKER		
ANT	-	*	T90-0483-05	ANTENNA :ACSY		
MIC	2B		T91-0504-05	MIC ELEMENT		
D200	2D		ERB83-004	DIODE(BT-9)	M4X	
IC101	2D		PF0310-01	IC (144MHZ POWER MODULE)		
IC100	2C		S-AU57	IC (430/440MHZ POWER MODULE)		
68	-		W08-0437-05	AC ADAPTER (120V) :ACSY	KP	
68	-		W08-0438-05	AC ADAPTER (240V) :ACSY	T	
68	-		W08-0440-05	AC ADAPTER (230V) :ACSY	E E2E3	
68	-		W08-0440-05	AC ADAPTER (230V) :ACSY	E9	
68	-		W08-0441-05	AC ADAPTER (120/230V) :ACSY	M M2M3	
69	-		W09-0825-15	BATTERY ASSY(PB-34) :ACSY	M3	
69	-		W09-0826-05	BATTERY ASSY(PB-32) :ACSY	KM M2T	
69	-		W09-0826-05	BATTERY ASSY(PB-32) :ACSY	PE E2	
69	-		W09-0826-05	BATTERY ASSY(PB-32) :ACSY	E3E9	
70	2A	*	X52-3290-00	CTCSS UNIT (OPTION··TSU-8)	KP	
700	-	*	X57-4400-11	TX-RX UNIT (A/7···G/7)	KP	
700	-	*	X57-4400-21	TX-RX UNIT (A/7···G/7)	M	
700	-	*	X57-4400-22	TX-RX UNIT (A/7···G/7)	M2M3M4	
700	-	*	X57-4400-71	TX-RX UNIT (A/7···G/7)	X	
700	-	*	X57-4402-71	TX-RX UNIT (A/7···G/7)	TE	
700	-	*	X57-4402-72	TX-RX UNIT (A/7···G/7)	E2	
700	-	*	X57-4402-73	TX-RX UNIT (A/7···G/7)	E3E9	
CTCSS UNIT (X52-3290-00) : TSU-8						
C1			CK73HB1C103K	CHIP C 0.01UF K	KP	
C2			CK73HB1E102K	CHIP C 1000PF K	KP	
C3 ,4			CC73HCH1E220J	CHIP C 22PF J	KP	
C5			CK73HB1C103K	CHIP C 0.01UF K	KP	
C6 ,7			CK73FF1C105Z	CHIP C 1.0UF Z	KP	
C8			C92-0507-05	CHIP TAN 4.7UF 6.3WV	KP	
C9			CC73HCH1E101J	CHIP C 100PF J	KP	
C10			CK73FB1E104K	CHIP C 0.10UF K	KP	
C11			CK73HB1E102K	CHIP C 1000PF K	KP	
C12			CK73GR1C473K	CHIP C 0.047UF K	KP	
X1			L77-1530-05	CRYSTAL RESONATOR(3.6864MHZ)	KP	
R1			RK73HB1J563J	CHIP R 56K J 1/16W	KP	
R2			RK73HB1J473J	CHIP R 47K J 1/16W	KP	
R3			RK73HB1J224J	CHIP R 220K J 1/16W	KP	
R4			RK73HB1J101J	CHIP R 100 J 1/16W	KP	
R5			RK73HB1J105J	CHIP R 1M J 1/16W	KP	
R6			RK73HB1J274J	CHIP R 270K J 1/16W	KP	
R7			RK73HB1J101J	CHIP R 100 J 1/16W	KP	
R8			RK73HB1J562J	CHIP R 5.6K J 1/16W	KP	
R9			RK73HB1J333J	CHIP R 33K J 1/16W	KP	
R10			RK73HB1J123J	CHIP R 12K J 1/16W	KP	
R11			RK73HB1J104J	CHIP R 100K J 1/16W	KP	
R12			RK73HB1J822J	CHIP R 8.2K J 1/16W	KP	
R13			RK73HB1J682J	CHIP R 6.8K J 1/16W	KP	

PARTS LIST

* New Parts
Parts without Parts No. are not supplied.
Les articles non mentionnes dans le Parts No. ne sont pas fournis.
Teile ohne Parts No. werden nicht geliefert.

CTCSS UNIT (X52-3290-00) : TSU-8
TX-RX UNIT(X57-440X-XX)

Ref. No. 参照番号	Address 位置	New Parts 新	Parts No. 部品番号	Description 部品名／規格	Destination 仕向	Remarks 備考
R14			R92-1252-05	CHIP R 0 OHM	KP	
R15			R92-1368-05	CHIP R 0 OHM 1/16W	KP	
R16 ,17			RK73HB1J473J	CHIP R 47K J 1/16W	KP	
IC1			AK2341	IC	KP	
TX-RX UNIT(X57-440X-XX)						
C1			CK73HB1C103K	CHIP C 0.01UF K		
C2 ,3			CK73FB1E104K	CHIP C 0.10UF K		
C4		*	CC73HCH1E150J	CHIP C 15PF J		
C5		*	CC73HCH1E270J	CHIP C 27PF J		
C6		*	CC73HCH1E820J	CHIP C 82PF J		
C7 -9			CK73FB1E104K	CHIP C 0.10UF K		
C10			CK73HB1C103K	CHIP C 0.01UF K		
C11		*	CC73HCH1E680J	CHIP C 68PF J		
C12		*	CC73HCH1E820J	CHIP C 82PF J		
C13			CC73HCH1E101J	CHIP C 100PF J		
C14 ,15			CK73FB1E104K	CHIP C 0.10UF K		
C16		*	CC73HCH1E180J	CHIP C 18PF J		
C17		*	CC73HCH1E270J	CHIP C 27PF J		
C18		*	CC73HCH1E390J	CHIP C 39PF J		
C19			CK73FB1E104K	CHIP C 0.10UF K		
C20 ,21			CK73HB1C103K	CHIP C 0.01UF K		
C22 ,23			CK73HB1E471K	CHIP C 470PF K		
C24			CK73GB1H471K	CHIP C 470PF K		
C25			CK73HB1C103K	CHIP C 0.01UF K		
C26			C92-0576-05	TANTAL 1UF 6.3WV		
C27			CK73GR1C333K	CHIP C 0.033UF K		
C28			CK73GR1C473K	CHIP C 0.047UF K		
C29			CK73HB1C103K	CHIP C 0.01UF K		
C30			CK73FB1E104K	CHIP C 0.10UF K		
C31			CK73HB1E471K	CHIP C 470PF K		
C32		*	CC73HCH1E120J	CHIP C 12PF J		
C33			CC73GCH1H070D	CHIP C 7PF D		
C34			CK73GR1C473K	CHIP C 0.047UF K		
C35 -40			CK73HB1E471K	CHIP C 470PF K		
C41			CK73HB1E102K	CHIP C 1000PF K		
C42 ,43			CK73HB1E471K	CHIP C 470PF K		
C44			CK73GB1H152K	CHIP C 1500PF K		
C45			CK73GR1C333K	CHIP C 0.033UF K		
C46			C92-0576-05	TANTAL 1UF 6.3WV		
C47			CK73GB1H152K	CHIP C 1500PF K		
C48			CK73GR1C333K	CHIP C 0.033UF K		
C49			C92-0576-05	TANTAL 1UF 6.3WV		
C50			CC73GCH1H050C	CHIP C 5PF C		
C51			CC73GCH1H080D	CHIP C 8PF D		
C52 ,53			CK73GR1C333K	CHIP C 0.033UF K		
C54 -57			CK73HB1C103K	CHIP C 0.01UF K		
C58			CK73HB1E102K	CHIP C 1000PF K		
C59			CK73HB1E471K	CHIP C 470PF K		
C60		*	C92-0542-05	CHIP TAN 0.1UF 20WV		
C61			CK73HB1E471K	CHIP C 470PF K		
C63			CK73HB1E471K	CHIP C 470PF K		
C64		*	C92-0542-05	CHIP TAN 0.1UF 20WV		
C65			CK73GR1C473K	CHIP C 0.047UF K		
C67			CK73HB1C103K	CHIP C 0.01UF K		

TH-79 A/E

PARTS LIST

* New Parts
Parts without Parts No. are not supplied.
Les articles non mentionnes dans le Parts No. ne sont pas fournis.
Teile ohne Parts No. werden nicht geliefert.

TX-RX UNIT(X57-440X-XX)

Ref. No. 参照番号	Address 位置	New Parts 新	Parts No. 部品番号	Description 部品名／規格			Destination 仕向	Remarks 備考
C68			CK73HB1E471K	CHIP C	470PF	K		
C69			C92-0507-05	CHIP TAN	4.7UF	6.3WV		
C70 -72			CK73GR1C473K	CHIP C	0.047UF	K		
C73			CK73HB1E471K	CHIP C	470PF	K		
C74			C92-0507-05	CHIP TAN	4.7UF	6.3WV		
C75		*	CC73HCH1E030C	CHIP C	3PF	C		
C76			C92-0507-05	CHIP TAN	4.7UF	6.3WV		
C77			C92-0566-05	TANTAL	10UF	6.3WV		
C78 ,79			CK73HB1E471K	CHIP C	470PF	K		
C80			C92-0507-05	CHIP TAN	4.7UF	6.3WV		
C81			CK73HB1E102K	CHIP C	1000PF	K		
C82 ,83			CK73HB1E471K	CHIP C	470PF	K		
C84			CK73GR1C473K	CHIP C	0.047UF	K		
C85			CK73HB1E102K	CHIP C	1000PF	K		
C86		*	C92-0542-05	CHIP TAN	0.1UF	20WV		
C87			C92-0587-05	TANTAL	2.2UF	4WV		
C88			CK73HB1C103K	CHIP C	0.01UF	K		
C89 ,90			CK73HB1E471K	CHIP C	470PF	K		
C91		*	CC73HCH1E030C	CHIP C	3PF	C		
C92			CK73HB1C103K	CHIP C	0.01UF	K		
C93		*	CC73HCH1E470J	CHIP C	47PF	J		
C94			CK73HB1C103K	CHIP C	0.01UF	K		
C95		*	CC73HCH1E050C	CHIP C	5PF	C		
C96		*	CC73HCH1E030C	CHIP C	3PF	C		
C97			CK73HB1E102K	CHIP C	1000PF	K		
C98			CC73GCH1H070D	CHIP C	7PF	D		
C99		*	CC73HCH1E180J	CHIP C	18PF	J		
C100			CK73HB1E471K	CHIP C	470PF	K		
C101		*	CC73HCH1E050C	CHIP C	5PF	C		
C102		*	CC73HCH1E030C	CHIP C	3PF	C	XTMM1	
C102		*	CC73HCH1E030C	CHIP C	3PF	C	M3M4E	
C102		*	CC73HCH1E030C	CHIP C	3PF	C	E2E3E9	
C102		*	CC73HCH1E050C	CHIP C	5PF	C	KP	
C103			CK73HB1C103K	CHIP C	0.01UF	K		
C104		*	CC73HCH1E120J	CHIP C	12PF	J		
C105			CK73HB1C103K	CHIP C	0.01UF	K		
C106			CC73HCH1E010C	CHIP C	1PF	C		
C107			CK73HB1E471K	CHIP C	470PF	K		
C108			CC73HCH1E101J	CHIP C	100PF	J		
C109			CK73HB1E102K	CHIP C	1000PF	K		
C110			CC73HCH1E101J	CHIP C	100PF	J		
C111			CK73HB1E471K	CHIP C	470PF	K		
C113,114			CK73HB1E102K	CHIP C	1000PF	K		
C115			CK73HB1E471K	CHIP C	470PF	K		
C116			CC73GCH1H070D	CHIP C	7PF	D		
C117-119			CK73HB1E102K	CHIP C	1000PF	K		
C120			CK73HB1E471K	CHIP C	470PF	K	XTMM2	
C120			CK73HB1E471K	CHIP C	470PF	K	M3M4E	
C120			CK73HB1E471K	CHIP C	470PF	K	E2E3E9	
C121			CK73FB1E104K	CHIP C	0.10UF	K		
C122		*	CC73HCH1E680J	CHIP C	68PF	J		
C123			CK73GB1H102K	CHIP C	1000PF	K		
C124			CK73HB1E102K	CHIP C	1000PF	K		
C125			CC73GCH1H220J	CHIP C	22PF	J		
C126			CK73HB1E102K	CHIP C	1000PF	K		

PARTS LIST

* New Parts
Parts without Parts No. are not supplied.
Les articles non mentionnes dans le Parts No. ne sont pas fournis.
Teile ohne Parts No. werden nicht geliefert.

TX-RX UNIT(X57-440X-XX)

Ref. No. 参照番号	Address 位置	New Parts 新	Parts No. 部品番号	Description 部品名／規格			Destination 仕向	Remarks 備考
C127			CK73HB1E471K	CHIP C	470PF	K		
C128		*	CC73HCH1E120J	CHIP C	12PF	J		
C129		*	CC73HCH1E680J	CHIP C	68PF	J		
C130,131			CK73HB1E471K	CHIP C	470PF	K		
C132		*	CC73HCH1E120J	CHIP C	12PF	J		
C134		*	CC73HCH1E060D	CHIP C	6PF	D		
C135			CC73GCH1H030C	CHIP C	3PF	C		
C136			CK73HB1E471K	CHIP C	470PF	K		
C137			CC73HCH1E100D	CHIP C	10PF	D		
C138			CC73HCH1E101J	CHIP C	100PF	J	XTMM2	
C138			CC73HCH1E101J	CHIP C	100PF	J	M3M4E	
C138			CC73HCH1E101J	CHIP C	100PF	J	E2E3E9	
C139		*	CC73HCH1E150J	CHIP C	15PF	J		
C140			CK73HB1C103K	CHIP C	0.01UF	K		
C141			CK73GB1H471K	CHIP C	470PF	K		
C142			CC73HCH1E080D	CHIP C	8PF	D		
C143			CC73HCH1E101J	CHIP C	100PF	J	XTMM2	
C143			CC73HCH1E101J	CHIP C	100PF	J	M3M4E	
C143			CC73HCH1E101J	CHIP C	100PF	J	E2E3E9	
C144			CK73HB1E102K	CHIP C	1000PF	K		
C146		*	CC73HCH1E030C	CHIP C	3PF	C		
C147			CK73HB1E471K	CHIP C	470PF	K		
C148			CK73HB1E102K	CHIP C	1000PF	K		
C149			CC73HCH1E080D	CHIP C	8PF	D		
C150			CK73HB1E471K	CHIP C	470PF	K		
C151		*	CC73HCH1E020C	CHIP	2PF	C	XTMM2	
C151		*	CC73HCH1E020C	CHIP	2PF	C	M3M4E	
C151		*	CC73HCH1E020C	CHIP	2PF	C	E2E3E9	
C152			CC73HCH1E080D	CHIP C	8PF	D		
C153			CK73HB1E102K	CHIP C	1000PF	K		
C154			CK73HB1C103K	CHIP C	0.01UF	K	XTMM2	
C154			CK73HB1C103K	CHIP C	0.01UF	K	M3M4E	
C154			CK73HB1C103K	CHIP C	0.01UF	K	E2E3E9	
C155			CC73HCH1E010C	CHIP C	1PF	C		
C157		*	CC73HCH1E030C	CHIP C	3PF	C		
C158			CK73HB1C103K	CHIP C	0.01UF	K		
C159			CK73HB1E471K	CHIP C	470PF	K		
C160			CK73HB1E102K	CHIP C	1000PF	K		
C161			CK73GB1H102K	CHIP C	1000PF	K		
C162			CC73HCH1E080D	CHIP C	8PF	D		
C163		*	CC73HCH1E330J	CHIP C	33PF	J		
C165		*	CC73HCH1E680J	CHIP C	68PF	J		
C168			CC73HCH1E220J	CHIP C	22PF	J		
C169,170			CK73HB1E471K	CHIP C	470PF	K		
C171			CC73HCH1E010C	CHIP C	1PF	C		
C172			C92-0585-05	TANTAL	4.7UF	16WV		
C173			CK73HB1E471K	CHIP C	470PF	K		
C174			CC73HCH1E040C	CHIP C	4PF	C		
C175		*	CC73HCH1E330J	CHIP C	33PF	J		
C176			CK73HB1C103K	CHIP C	0.01UF	K		
C177			CK73HB1E471K	CHIP C	470PF	K		
C178		*	CC73HCH1E030C	CHIP C	3PF	C	XTMM2	
C178		*	CC73HCH1E030C	CHIP C	3PF	C	M3M4E	
C178		*	CC73HCH1E030C	CHIP C	3PF	C	E2E3E9	
C179			CK73HB1C103K	CHIP C	0.01UF	K		

TH-79 A/E

PARTS LIST

* New Parts
Parts without Parts No. are not supplied.
Les articles non mentionnes dans le Parts No. ne sont pas fournis.
Teile ohne Parts No. werden nicht geliefert.

TX-RX UNIT(X57-440X-XX)

Ref. No. 参照番号	Address 位置	New Parts 新	Parts No. 部品番号	Description 部品名／規格	Destination 仕向	Remarks 備考
C180			CK73HB1E102K	CHIP C 1000PF K		
C181			CK73HB1E471K	CHIP C 470PF K		
C182		*	CC73HCH1E150J	CHIP C 15PF J		
C183		*	CC73HCH1E060D	CHIP C 6PF D		
C184			CK73HB1E102K	CHIP C 1000PF K		
C185			CK73HB1E471K	CHIP C 470PF K		
C186			CC73HCH1E100D	CHIP C 10PF D		
C187			CK73HB1E471K	CHIP C 470PF K		
C188			CC73HCH1E040C	CHIP C 4PF C	XTMM2	
C188			CC73HCH1E040C	CHIP C 4PF C	M3M4E	
C188			CC73HCH1E040C	CHIP C 4PF C	E2E3E9	
C189			CC73HCH1E220J	CHIP C 22PF J		
C190			CK73GR1C473K	CHIP C 0.047UF K		
C191		*	CC73HCH1E030C	CHIP C 3PF C		
C192		*	CC73HCH1E470J	CHIP C 47PF J		
C193			CK73GB1H103K	CHIP C 0.01UF K		
C194			CK73HB1E471K	CHIP C 470PF K		
C195			CK73GB1H103K	CHIP C 0.01UF K		
C196			CK73HB1E102K	CHIP C 1000PF K		
C197			CC73HCH1E101J	CHIP C 100PF J		
C198			CK73HB1E102K	CHIP C 1000PF K		
C199		*	CC73HCH1E470J	CHIP C 47PF J		
C200			CK73HB1E102K	CHIP C 1000PF K		
C201		*	CC73HCH1E070D	CHIP C 7PF D		
C202			CC73HCH1E100D	CHIP C 10PF D		
C203		*	CC73HCH1E120J	CHIP C 12PF J		
C204			CC73HCH1E080D	CHIP C 8PF D		
C205		*	CC73HCH1E330J	CHIP C 33PF J		
C206		*	CC73HCH1E060D	CHIP C 6PF D		
C208			CK73HB1E102K	CHIP C 1000PF K		
C209			CC73GCH1H030C	CHIP C 3PF C		
C210			CC73GCH1H020C	CHIP C 2.0PF C		
C211			CK73HB1E471K	CHIP C 470PF K		
C212		*	CC73HCH1E030C	CHIP C 3PF C		
C213,214			CK73HB1E102K	CHIP C 1000PF K		
C215		*	CC73HCH1E120J	CHIP C 12PF J		
C216		*	CC73HCH1E030C	CHIP C 3PF C		
C217			CC73GCH1H020C	CHIP C 2.0PF C	KP	
C218			CC73GCH1H040C	CHIP C 4PF C		
C221		*	CC73HCH1E070D	CHIP C 7PF D		
C222			CC73GCH1H1R5C	CHIP C 1.5PF C	XTMM2	
C222			CC73GCH1H1R5C	CHIP C 1.5PF C	M3M4E	
C222			CC73GCH1H1R5C	CHIP C 1.5PF C	E2E3E9	
C223			CC73GCH1H180J	CHIP C 18PF J		
C224			CC73HCH1E080D	CHIP C 8PF D		
C225			CK73HB1E102K	CHIP C 1000PF K		
C226			CC73GCH1H050C	CHIP C 5PF C		
C227			CC73GCH1H1R5C	CHIP C 1.5PF C	XTMM2	
C227			CC73GCH1H1R5C	CHIP C 1.5PF C	M3M4E	
C227			CC73GCH1H1R5C	CHIP C 1.5PF C	E2E3E9	
C228			CC73GCH1H030C	CHIP C 3PF C	KP	
C228			CC73GCH1H060D	CHIP C 6PF D	XTMM2	
C228			CC73GCH1H060D	CHIP C 6PF D	M3M4E	
C228			CC73GCH1H060D	CHIP C 6PF D	E2E3E9	
C229			CC73HCH1E100D	CHIP C 10PF D		

PARTS LIST

× New Parts
Parts without Parts No. are not supplied.
Les articles non mentionnes dans le Parts No. ne sont pas fourn's.
Teile ohne Parts No. werden nicht geliefert.

TX-RX UNIT(X57-440X-XX)

Ref. No. 参照番号	Address 位置	New Parts 新	Parts No. 部品番号	Description 部品名／規格			Destination 仕向	Remarks 備考
C230		*	CC73HCH1E150J	CHIP C	15PF	J		
C231		*	CC73HCH1E330J	CHIP C	33PF	J		
C232			CC73GCH1H020C	CHIP C	2.0PF	C	KP	
C232			CC73GCH1H1R5C	CHIP C	1.5PF	C	XTMM2	
C232			CC73GCH1H1R5C	CHIP C	1.5PF	C	M3M4E	
C232			CC73GCH1H1R5C	CHIP C	1.5PF	C	E2E3E9	
C234			CC73GCH1H080D	CHIP C	8PF	D		
C235			CC73GCH1H270J	CHIP C	27PF	J		
C236			CC73GCH1H050C	CHIP C	5PF	C		
C237			CK73GB1H102K	CHIP C	1000PF	K		
C238		*	CC73HCH1E150J	CHIP C	15PF	J		
C239			CK73HB1E471K	CHIP C	470PF	K		
C240		*	CC73HCH1E120J	CHIP C	12PF	J		
C242			CK73HB1E471K	CHIP C	470PF	K	XTMM2	
C242			CK73HB1E471K	CHIP C	470PF	K	M3M4E	
C242			CK73HB1E471K	CHIP C	470PF	K	E2E3E9	
C243			CK73HB1E471K	CHIP C	470PF	K		
C244			CK73FB1E104K	CHIP C	0.10UF	K		
C245			CK73HB1E471K	CHIP C	470PF	K		
C246			CK73HB1E102K	CHIP C	1000PF	K		
C247			CK73HB1C103K	CHIP C	0.01UF	K		
C250		*	C92-0602-05	TANTAL	1UF	10WV		
C251			CC73HCH1E080D	CHIP C	8PF	D		
C301, 302			C92-0565-05	TANTAL	6.8UF	10WV		
C303			C92-0587-05	TANTAL	2.2UF	4WV		
C304			CK73HB1E102K	CHIP C	1000PF	K		
C305			CK73HB1C103K	CHIP C	0.01UF	K		
C306			CK73GB1H103K	CHIP C	0.01UF	K		
C307		*	CC73HCH1E390J	CHIP C	39PF	J		
C308			CK73HB1C103K	CHIP C	0.01UF	K		
C309-311			CK73HB1E471K	CHIP C	470PF	K		
C312			C92-0002-05	CHIP TAN	0.22UF	35WV		
C313		*	CC73HCH1E390J	CHIP C	39PF	J		
C314			CC73HCH1E101J	CHIP C	100PF	J		
C315			CK73HB1C103K	CHIP C	0.01UF	K		
C316			CK73GB1E223K	CHIP C	0.022UF	K		
C317			C92-0587-05	TANTAL	2.2UF	4WV		
C318			CK73HB1C103K	CHIP C	0.01UF	K		
C319			CK73GB1H471K	CHIP C	470PF	K		
C320			C92-0587-05	TANTAL	2.2UF	4WV		
C321-324			CK73HB1E471K	CHIP C	470PF	K		
C325			C90-4017-05	ELECTRO	470UF	4WV		
C326		*	CK73HB1E182K	CHIP C	1800PF	K		
C327			CC73GCH1H151J	CHIP C	150PF	J		
C328			CK73GB1H471K	CHIP C	470PF	K		
C329			C92-0587-05	TANTAL	2.2UF	4WV		
C330			CK73GB1H103K	CHIP C	0.01UF	K		
C331			CK73HB1E471K	CHIP C	470PF	K		
C332			C92-0507-05	CHIP TAN	4.7UF	6.3WV		
C333			CK73GB1C104K	CHIP C	0.10UF	K		
C335			C92-0564-05	ELECTRO	22UF	6.3WV		
C336			CK73HB1E471K	CHIP C	470PF	K		
C337			C92-0576-05	TANTAL	1UF	6.3WV		
C338			CK73HB1E471K	CHIP C	470PF	K		
C339			CK73HB1E102K	CHIP C	1000PF	K		

PARTS LIST

* New Parts
Parts without Parts No. are not supplied.
Les articles non mentionnes dans le Parts No. ne sont pas fournis.
Teile ohne Parts No. werden nicht geliefert.

TX-RX UNIT(X57-440X-XX)

Ref. No. 参照番号	Address 位置	New Parts 新	Parts No. 部品番号	Description 部品名／規格		Destination 仕向	Remarks 備考
C340			C92-0576-05	TANTAL	1UF 6.3WV		
C342			CK73GB1H103K	CHIP C	0.01UF K		
C343			CK73HB1E471K	CHIP C	470PF K		
C344		*	C92-0594-05	TANTAL	4.7UF 4WV		
C345			CK73GB1H103K	CHIP C	0.01UF K		
C346,347			CK73GB1H471K	CHIP C	470PF K		
C348			CK73HB1C103K	CHIP C	0.01UF K		
C349			CK73GB1H103K	CHIP C	0.01UF K		
C350			C92-0564-05	ELECTRO	22UF 6.3WV		
C351			CK73HB1E471K	CHIP C	470PF K		
C352		*	C92-0594-05	TANTAL	4.7UF 4WV		
C353			CK73HB1E471K	CHIP C	470PF K		
C354			CK73GR1C333K	CHIP C	0.033UF K		
C355			CK73HB1E471K	CHIP C	470PF K		
C356-358			CK73GR1C473K	CHIP C	0.047UF K		
C359		*	C92-0618-05	ELECTRO	10UF 16WV		
C360			CK73GB1H471K	CHIP C	470PF K		
C361			CK73GR1C333K	CHIP C	0.033UF K		
C362			CK73GB1H471K	CHIP C	470PF K		
C363			CK73HB1E471K	CHIP C	470PF K		
C364			CK73GR1C333K	CHIP C	0.033UF K		
C365,366			CK73HB1E471K	CHIP C	470PF K		
C367,368			CK73GR1C333K	CHIP C	0.033UF K		
C369			C92-0564-05	ELECTRO	22UF 6.3WV		
C370,371			CK73HB1E471K	CHIP C	470PF K		
C372,373			C92-0587-05	TANTAL	2.2UF 4WV		
C374,375			CK73GR1C473K	CHIP C	0.047UF K		
C376,377			CK73HB1C103K	CHIP C	0.01UF K		
C378			CK73GB1H103K	CHIP C	0.01UF K		
C379			CK73HB1E471K	CHIP C	470PF K		
C380,381			C92-0566-05	TANTAL	10UF 6.3WV		
C382,383			C92-0593-05	ELECTRO	33UF 10WV		
C384			CK73HB1E471K	CHIP C	470PF K		
C385,386			CK73GR1C473K	CHIP C	0.047UF K		
C387			C92-0567-05	TANTAL	68UF 6.3WV		
C388-391			CK73HB1E471K	CHIP C	470PF K		
C392,393			CK73GB1H471K	CHIP C	470PF K		
C394,395			C92-0576-05	TANTAL	1UF 6.3WV		
C396-400			CK73HB1E471K	CHIP C	470PF K		
C401			CC73HCH1E101J	CHIP C	100PF J		
C402-404			CK73HB1E471K	CHIP C	470PF K		
C405			CK73GB1H471K	CHIP C	470PF K		
C407			CK73GB1E223K	CHIP C	0.022UF K		
C408		*	C92-0594-05	TANTAL	4.7UF 4WV		
C409			C92-0567-05	TANTAL	68UF 6.3WV		
C410			CK73GB1H471K	CHIP C	470PF K		
C411-415			CK73HB1E471K	CHIP C	470PF K		
C416			CK73GB1H471K	CHIP C	470PF K		
C417			CK73HB1E471K	CHIP C	470PF K		
C418,419			CK73GB1H471K	CHIP C	470PF K		
C420			CK73HB1E471K	CHIP C	470PF K		
C421			C92-0565-05	TANTAL	6.8UF 10WV		
C422,423			CK73HB1E471K	CHIP C	470PF K		
C424			CK73HB1C103K	CHIP C	0.01UF K		
C425			CK73GB1H471K	CHIP C	470PF K		

PARTS LIST

* New Parts
Parts without Parts No. are not supplied.
Les articles non mentionnes dans le Parts No. ne sont pas fournis.
Teile ohne Parts No. werden nicht geliefert.

TX-RX UNIT(X57-440X-XX)

Ref. No. 参照番号	Address 位置	New Parts 新	Parts No. 部品番号	Description 部品名／規格	Destination 仕向	Remarks 備考
C426			CK73HB1E471K	CHIP C 470PF K		
C427			CK73GR1C473K	CHIP C 0.047UF K		
C428			CK73HB1C103K	CHIP C 0.01UF K		
C429			CK73HB1E471K	CHIP C 470PF K		
C430			CK73GR1C473K	CHIP C 0.047UF K		
C431			CK73HB1E471K	CHIP C 470PF K		
C432		*	C92-0617-05	ELECTRN 220UF 4WV		
C433,434			C92-0576-05	TANTAL 1UF 6.3WV		
C435,436			CK73HB1E471K	CHIP C 470PF K		
C437,438			CK73GR1C473K	CHIP C 0.047UF K		
C439			CK73HB1C103K	CHIP C 0.01UF K		
C441			C90-2108-05	ELECTRN 2.2UF 16WV		
TC1			C05-0380-05	TRIMMER CAPACITOR 10PF		
A4	3A,2C	*	E37-0425-15	FLAT CABLE (26P:RF-CONT UNIT)		
CN1		*	E40-5641-05	FLAT CABLE CONNECTOR(26P)		
CN2		*	E40-5666-05	PIN ASSY SOCKET		
CN3		*	E40-5667-05	PIN ASSY		
CN4			E23-0486-05	TERMINAL		
CN5 ,6		*	E23-0965-14	TERMINAL (BATT)		
CN301			E40-5180-05	PIN ASSY (3P)		
CN302		*	E40-5641-05	FLAT CABLE CONNECTOR(26P)		
CN303			E40-5618-05	FLAT CABLE CONNECTOR(8P)		
CN304			E40-5629-05	PIN ASSY (6P)		
CN305			E40-5630-05	PIN ASSY SOCKET(6P)		
CN306		*	E40-5656-05	PIN ASSY SOCKET(22P)		
CN307		*	E40-5655-05	PIN ASSY (22P)		
CN309			E23-0486-05	TERMINAL		
J2			E03-0170-05	DC JACK		
J301			E11-0457-05	PHONE JACK		
W301			E33-1885-05	FINISHED WIRE SET	KPETM	
A2		*	F10-2135-14	SHIELDING PLATE(UHF VCO)		
A303,304		*	F20-1154-04	INSULATING SHEET(ENC,VOL)		
A1		*	G02-0759-04	EARTH SPRING (RF)		
A3		*	G13-1465-04	CUSHION (12.8MHZ X,TAL)		
A5			G11-0682-04	SEAL (VHF VCO)		
A6		*	G11-0732-04	SHEET (IC312)		
A302		*	G02-0762-14	EARTH SPRING (G/7 PCB)		
A305		*	J30-1201-04	SPACER(CPU)		
CD1		*	L79-1113-05	FILTER(450KHZ)		
CD2			L79-1013-05	FILTER(455KHZ)		
CF1		*	L72-0902-05	CERAMIC FILTER(450KHZ)		
CF2			L72-0362-05	CERAMIC FILTER(455KHZ)		
L1 ,2			L92-0137-05	CORE		
L3 -10			L92-0138-05	CORE		
L11			L40-1095-34	SMALL FIXED INDUCTOR(1UH)		
L12			L40-1281-34	SMALL FIXED INDUCTOR(120NH)		
L13		*	L40-5681-42	SMALL FIXED INDUCTOR(0.56UH)		
L14		*	L40-1091-37	SMALL FIXED INDUCTOR(1UH)		
L15		*	L40-5681-42	SMALL FIXED INDUCTOR(0.56UH)		
L16			L40-1871-36	SMALL FIXED INDUCTOR(18NH)		
L17		*	L40-1271-36	SMALL FIXED INDUCTOR(12NH)		
L18			L40-1871-36	SMALL FIXED INDUCTOR(18NH)		
L19		*	L34-4360-05	COIL		

PARTS LIST

* New Parts
Parts without Parts No. are not supplied.
Les articles non mentionnes dans le Parts No. ne sont pas fournis.
Teile ohne Parts No. werden nicht geliefert.

TX-RX UNIT(X57-440X-XX)

Ref. No. 参照番号	Address 位置	New Parts 新	Parts No. 部品番号	Description 部品名／規格	Destination 仕向	Remarks 備考
L20		*	L79-1108-05	HELICAL BLOCK(435MHZ)	XTMM2	
L20		*	L79-1108-05	HELICAL BLOCK(435MHZ)	M3M4E	
L20		*	L79-1108-05	HELICAL BLOCK(435MHZ)	E2E3E9	
L20		*	L79-1109-05	HELICAL BLOCK(444MHZ)	KP	
L21			L40-8271-35	SMALL FIXED INDUCTOR(82NH)		
L22			L40-1871-36	SMALL FIXED INDUCTOR(18NH)		
L23			L40-3985-34	SMALL FIXED INDUCTOR(390NH)		
L24		*	L40-1271-35	SMALL FIXED INDUCTOR(12NH)		
L25			L40-2271-36	SMALL FIXED INDUCTOR(22NH)		
L26			L40-6861-36	SMALL FIXED INDUCTOR(6.8NH)	XTMM2	
L26			L40-6861-36	SMALL FIXED INDUCTOR(6.8NH)	M3M4E	
L26			L40-6861-36	SMALL FIXED INDUCTOR(6.8NH)	E2E3E9	
L27			L34-1373-05	COIL (2.5T)		
L28 ,29			L40-1871-36	SMALL FIXED INDUCTOR(18NH)		
L30			L40-2271-36	SMALL FIXED INDUCTOR(22NH)		
L31			L40-1871-36	SMALL FIXED INDUCTOR(18NH)		
L32			L40-1085-34	SMALL FIXED INDUCTOR(100NH)		
L33			L40-5671-34	SMALL FIXED INDUCTOR(56NH)		
L34			L40-1271-34	SMALL FIXED INDUCTOR(12NH)	KP	
L34			L40-1571-34	SMALL FIXED INDUCTOR(15NH)	XTMM2	
L34			L40-1571-34	SMALL FIXED INDUCTOR(15NH)	M3M4E	
L34			L40-1571-34	SMALL FIXED INDUCTOR(15NH)	E2E3E9	
L35		*	L40-2771-40	SMALL FIXED INDUCTOR(27NH)		
L36		*	L34-4359-05	COIL		
L37		*	L40-2771-40	SMALL FIXED INDUCTOR(27NH)		
L38			L92-0138-05	CORE		
L39		*	L40-3961-38	SMALL FIXED INDUCTOR(3.9NH)	XTMM2	
L39		*	L40-3961-38	SMALL FIXED INDUCTOR(3.9NH)	M3M4E	
L39		*	L40-3961-38	SMALL FIXED INDUCTOR(3.9NH)	E2E3E9	
L40			L92-0138-05	CORE		
L41			L40-4761-36	SMALL FIXED INDUCTOR(4.7NH)	XTMM2	
L41			L40-4761-36	SMALL FIXED INDUCTOR(4.7NH)	M3M4E	
L41			L40-4761-36	SMALL FIXED INDUCTOR(4.7NH)	E2E3E9	
L42			L40-5671-34	SMALL FIXED INDUCTOR(56NH)		
L43			L40-2771-36	SMALL FIXED INDUCTOR(27NH)		
L44			L40-6871-35	SMALL FIXED INDUCTOR(68NH)		
L45			L40-1271-34	SMALL FIXED INDUCTOR(12NH)	KP	
L45			L40-1571-34	SMALL FIXED INDUCTOR(15NH)	XTMM2	
L45			L40-1571-34	SMALL FIXED INDUCTOR(15NH)	M3M4E	
L45			L40-1571-34	SMALL FIXED INDUCTOR(15NH)	E2E3E9	
L46			L40-1095-34	SMALL FIXED INDUCTOR(1UH)		
L47			L40-1085-34	SMALL FIXED INDUCTOR(100NH)		
L48			L40-1871-36	SMALL FIXED INDUCTOR(18NH)		
L50			L40-2271-36	SMALL FIXED INDUCTOR(22NH)		
L51			L34-1264-05	COIL (2.5T)		
L52			L40-2271-36	SMALL FIXED INDUCTOR(22NH)		
L53			L40-6871-34	SMALL FIXED INDUCTOR(68NH)		
L54			L40-1095-34	SMALL FIXED INDUCTOR(1UH)		
L55			L40-3371-36	SMALL FIXED INDUCTOR(33NH)		
L56			L40-2785-34	SMALL FIXED INDUCTOR(270NH)		
L57 ,58			L34-1264-05	COIL (2.5T)		
L59			L40-1085-34	SMALL FIXED INDUCTOR(100NH)		
L60		*	L79-1101-05	FILTER(146/440MHZ)		
L61		*	L40-3961-38	SMALL FIXED INDUCTOR(3.9NH)	XTMM2	
L61		*	L40-3961-38	SMALL FIXED INDUCTOR(3.9NH)	M3M4E	

PARTS LIST

× New Parts
Parts without Parts No. are not supplied.
Les articles non mentionnes dans le Parts No. ne sont pas fournis.
Teile ohne Parts No. werden nicht geliefert.

TX-RX UNIT(X57-440X-XX)

Ref. No. 参照番号	Address 位置	New Parts 新	Parts No. 部品番号	Description 部品名／規格	Destination 仕向	Remarks 備考
L61		*	L40-3961-38	SMALL FIXED INDUCTOR(3.9NH)	E2E3E9	
L62			L40-1092-81	SMALL FIXED INDUCTOR		
L63			L34-1333-05	COIL (8.5T)		
L64			L34-1327-05	COIL (7.5T)		
L65			L40-2271-35	SMALL FIXED INDUCTOR(22NH)		
L66			L40-1871-36	SMALL FIXED INDUCTOR(18NH)		
L67			L92-0138-05	CORE		
L68 ,69		*	L40-1071-35	SMALL FIXED INDUCTOR(10NH)	XTMM2	
L68 ,69		*	L40-1071-35	SMALL FIXED INDUCTOR(10NH)	M3M4E	
L68 ,69		*	L40-1071-35	SMALL FIXED INDUCTOR(10NH)	E2E3E9	
L301-309			L92-0138-05	CORE		
L310			L33-0737-05	CHOKE COIL		
L312-316			L92-0138-05	CORE		
L319,320			L92-0138-05	CORE		
L321,322			L92-0131-05	CORE		
X1			L77-1438-15	CRYSTAL RESONATOR(45.505MHZ)		
X2			L77-1528-05	CRYSTAL RESONATOR(12.8MHZ)		
X301			L78-0426-05	RESONATOR (4.19MHZ)		
XF1		*	L71-0439-05	MCF (38.850MHZ)		
XF2			L71-0409-15	MCF (45.05MHZ)		
CP301,302			R90-0724-05	MULTI COMP		
CP303			R90-0718-05	MULTI COMP 4.7X4		
CP304			R90-0719-05	MULTI COMP		
CP305			R90-0718-05	MULTI COMP 4.7X4		
R1			RK73FB2A120J	CHIP R 12 J 1/10W		
R2 -4			RK73GB1J102J	CHIP R 1.0K J 1/16W		
R5			RK73GB1J103J	CHIP R 10K J 1/16W		
R6			RK73HB1J103J	CHIP R 10K J 1/16W		
R7		*	RK73HB1J152J	CHIP R 1.5K J 1/16W		
R8			RK73HB1J473J	CHIP R 47K J 1/16W		
R9			RK73HB1J222J	CHIP R 2.2K J 1/16W		
R10		*	RK73HB1J272J	CHIP R 2.7K J 1/16W		
R11			RK73HB1J472J	CHIP R 4.7K J 1/16W		
R12			RK73GB1J102J	CHIP R 1.0K J 1/16W		
R13 ,14			RK73HB1J103J	CHIP R 10K J 1/16W		
R15			RK73HB1J470J	CHIP R 47 J 1/16W		
R16			RK73HB1J334J	CHIP R 330K J 1/16W		
R17 ,18			RK73HB1J103J	CHIP R 10K J 1/16W		
R19			RK73HB1J222J	CHIP R 2.2K J 1/16W		
R20			RK73HB1J102J	CHIP R 1.0K J 1/16W		
R21			RK73HB1J472J	CHIP R 4.7K J 1/16W		
R22			RK73HB1J104J	CHIP R 100K J 1/16W		
R23			RK73HB1J182J	CHIP R 1.8K J 1/16W		
R24			RK73HB1J562J	CHIP R 5.6K J 1/16W		
R25 ,26			RK73HB1J103J	CHIP R 10K J 1/16W		
R27			RK73HB1J823J	CHIP R 82K J 1/16W		
R28		*	RK73HB1J152J	CHIP R 1.5K J 1/16W		
R29			RK73HB1J154J	CHIP R 150K J 1/16W		
R30			RK73HB1J681J	CHIP R 680 J 1/16W		
R31		*	RK73HB1J152J	CHIP R 1.5K J 1/16W		
R32			RK73HB1J154J	CHIP R 150K J 1/16W		
R33 -35			RK73HB1J103J	CHIP R 10K J 1/16W		
R36			RK73HB1J473J	CHIP R 47K J 1/16W		
R37			RK73HB1J472J	CHIP R 4.7K J 1/16W		
R38			RK73HB1J334J	CHIP R 330K J 1/16W		

PARTS LIST

* New Parts
Parts without Parts No. are not supplied.
Les articles non mentionnes dans le Parts No. ne sont pas fournis.
Teile ohne Parts No. werden nicht geliefert.

TX-RX UNIT(X57-440X-XX)

Ref. No. 参照番号	Address 位置	New Parts 新	Parts No. 部品番号	Description 部品名／規格	Destination 仕向	Remarks 備考
R39			RK73HB1J472J	CHIP R 4.7K J 1/16W		
R40			RK73HB1J334J	CHIP R 330K J 1/16W		
R41			RK73HB1J122J	CHIP R 1.2K J 1/16W		
R42			RK73HB1J221J	CHIP R 220 J 1/16W		
R43			RK73HB1J274J	CHIP R 270K J 1/16W		
R44			RK73HB1J561J	CHIP R 560 J 1/16W		
R45			RK73HB1J274J	CHIP R 270K J 1/16W		
R46 ,47			RK73HB1J561J	CHIP R 560 J 1/16W		
R48 ,49		*	RK73HB1J152J	CHIP R 1.5K J 1/16W		
R50			RK73HB1J332J	CHIP R 3.3K J 1/16W		
R51			RK73GB1J332J	CHIP R 3.3K J 1/16W		
R52 ,53			RK73HB1J470J	CHIP R 47 J 1/16W		
R54			RK73HB1J472J	CHIP R 4.7K J 1/16W		
R55			RK73GB1J472J	CHIP R 4.7K J 1/16W		
R56			RK73HB1J102J	CHIP R 1.0K J 1/16W		
R57			RK73HB1J472J	CHIP R 4.7K J 1/16W		
R58			RK73HB1J102J	CHIP R 1.0K J 1/16W		
R59			RK73HB1J103J	CHIP R 10K J 1/16W		
R60			RK73HB1J472J	CHIP R 4.7K J 1/16W		
R61			RK73HB1J103J	CHIP R 10K J 1/16W		
R62			RK73HB1J101J	CHIP R 100 J 1/16W		
R63			RK73HB1J472J	CHIP R 4.7K J 1/16W		
R64			RK73HB1J183J	CHIP R 18K J 1/16W	KPXM2	
R64			RK73HB1J183J	CHIP R 18K J 1/16W	M3M4	
R65			RK73HB1J122J	CHIP R 1.2K J 1/16W		
R66 ,67		*	RK73HB1J564J	CHIP R 560K J 1/16W		
R68			RK73HB1J223J	CHIP R 22K J 1/16W		
R69			RK73HB1J103J	CHIP R 10K J 1/16W		
R70			RK73HB1J473J	CHIP R 47K J 1/16W		
R71		*	RK73HB1J152J	CHIP R 1.5K J 1/16W		
R72			RK73HB1J101J	CHIP R 100 J 1/16W		
R73			RK73HB1J473J	CHIP R 47K J 1/16W		
R74		*	RK73HB1J272J	CHIP R 2.7K J 1/16W		
R75			RK73HB1J392J	CHIP R 3.9K J 1/16W		
R76 ,77		*	RK73HB1J272J	CHIP R 2.7K J 1/16W		
R78			RK73HB1J101J	CHIP R 100 J 1/16W		
R79			RK73HB1J681J	CHIP R 680 J 1/16W		
R80 -82			RK73HB1J392J	CHIP R 3.9K J 1/16W		
R83		*	RK73HB1J272J	CHIP R 2.7K J 1/16W		
R84			RK73HB1J683J	CHIP R 68K J 1/16W		
R85 ,86			RK73HB1J392J	CHIP R 3.9K J 1/16W		
R87			RK73HB1J104J	CHIP R 100K J 1/16W		
R88			RK73HB1J103J	CHIP R 10K J 1/16W		
R89			RK73HB1J104J	CHIP R 100K J 1/16W		
R90			RK73HB1J105J	CHIP R 1M J 1/16W		
R91			RK73HB1J473J	CHIP R 47K J 1/16W		
R92			RK73HB1J273J	CHIP R 27K J 1/16W		
R93			RK73GB1J561J	CHIP R 560 J 1/16W		
R94			RK73HB1J680J	CHIP R 68 J 1/16W		
R95 -97			RK73HB1J103J	CHIP R 10K J 1/16W		
R98		*	RK73HB1J152J	CHIP R 1.5K J 1/16W		
R99			RK73HB1J332J	CHIP R 3.3K J 1/16W		
R100			RK73HB1J151J	CHIP R 150 J 1/16W		
R101			RK73HB1J223J	CHIP R 22K J 1/16W		
R102			RK73HB1J154J	CHIP R 150K J 1/16W		

PARTS LIST

* New Parts
Parts without Parts No. are not supplied.
Les articles non mentionnes dans le Parts No. ne sont pas fournis.
Teile ohne Parts No. werden nicht geliefert.

TX-RX UNIT(X57-440X-XX)

Ref. No. 参照番号	Address 位置	New Parts 新	Parts No. 部品番号	Description 部品名／規格			Destination 仕向	Remarks 備考
R103			RK73HB1J274J	CHIP R	270K	J 1/16W		
R104			RK73HB1J561J	CHIP R	560	J 1/16W		
R105			RK73HB1J332J	CHIP R	3.3K	J 1/16W		
R106			RK73HB1J561J	CHIP R	560	J 1/16W		
R107			RK73HB1J472J	CHIP R	4.7K	J 1/16W		
R108			RK73HB1J561J	CHIP R	560	J 1/16W		
R109			RK73HB1J392J	CHIP R	3.9K	J 1/16W		
R110			RK73HB1J822J	CHIP R	8.2K	J 1/16W		
R111			RK73HB1J222J	CHIP R	2.2K	J 1/16W		
R112			RK73HB1J680J	CHIP R	68	J 1/16W		
R113			RK73HB1J472J	CHIP R	4.7K	J 1/16W		
R114			RK73HB1J123J	CHIP R	12K	J 1/16W		
R115		*	RK73HB1J272J	CHIP R	2.7K	J 1/16W		
R116			RK73HB1J392J	CHIP R	3.9K	J 1/16W		
R117			RK73HB1J220J	CHIP R	22	J 1/16W		
R118			RK73HB1J680J	CHIP R	68	J 1/16W		
R119			RK73HB1J471J	CHIP R	470	J 1/16W		
R120			RK73HB1J104J	CHIP R	100K	J 1/16W		
R121			RK73HB1J220J	CHIP R	22	J 1/16W		
R122			RK73HB1J472J	CHIP R	4.7K	J 1/16W		
R123			RK73HB1J561J	CHIP R	560	J 1/16W		
R124			RK73HB1J104J	CHIP R	100K	J 1/16W		
R125		*	RK73HB1J272J	CHIP R	2.7K	J 1/16W	XTMM2	
R125		*	RK73HB1J272J	CHIP R	2.7K	J 1/16W	M3M4E	
R125		*	RK73HB1J272J	CHIP R	2.7K	J 1/16W	E2E3E9	
R126			RK73HB1J151J	CHIP R	150	J 1/16W		
R127			RK73HB1J182J	CHIP R	1.8K	J 1/16W		
R128			RK73HB1J680J	CHIP R	68	J 1/16W		
R129			RK73HB1J102J	CHIP R	1.0K	J 1/16W		
R130			RK73HB1J391J	CHIP R	390	J 1/16W		
R131		*	RK73HB1J272J	CHIP R	2.7K	J 1/16W		
R132			RK73HB1J680J	CHIP R	68	J 1/16W		
R133		*	RK73HB1J272J	CHIP R	2.7K	J 1/16W		
R134,135			RK73HB1J101J	CHIP R	100	J 1/16W	XTMM2	
R134,135			RK73HB1J101J	CHIP R	100	J 1/16W	M3M4E	
R134,135			RK73HB1J101J	CHIP R	100	J 1/16W	E2E3E9	
R135			RK73HB1J101J	CHIP R	100	J 1/16W	KP	
R136			RK73HB1J220J	CHIP R	22	J 1/16W		
R137			RK73HB1J270J	CHIP R	27	J 1/16W		
R138			RK73HB1J391J	CHIP R	390	J 1/16W		
R139			RK73HB1J102J	CHIP R	1.0K	J 1/16W		
R140			RK73HB1J270J	CHIP R	27	J 1/16W		
R141			RK73HB1J392J	CHIP R	3.9K	J 1/16W		
R142			RK73HB1J561J	CHIP R	560	J 1/16W		
R143,144			RK73HB1J180J	CHIP R	18	J 1/16W		
R145			RK73HB1J103J	CHIP R	10K	J 1/16W		
R146,147			RK73HB1J561J	CHIP R	560	J 1/16W		
R148			RK73HB1J104J	CHIP R	100K	J 1/16W		
R149			RK73HB1J681J	CHIP R	680	J 1/16W	XTMM2	
R149			RK73HB1J681J	CHIP R	680	J 1/16W	M3M4E	
R149			RK73HB1J681J	CHIP R	680	J 1/16W	E2E3E9	
R150			RK73HB1J470J	CHIP R	47	J 1/16W		
R151			RK73HB1J391J	CHIP R	390	J 1/16W		
R154			RK73HB1J332J	CHIP R	3.3K	J 1/16W	XTMM2	
R154			RK73HB1J332J	CHIP R	3.3K	J 1/16W	M3M4E	

PARTS LIST

× New Parts
Parts without Parts No. are not supplied.
Les articles non mentionnes dans le Parts No. ne sont pas fournis.
Teile ohne Parts No. werden nicht geliefert.

TX-RX UNIT(X57-440X-XX)

Ref. No. 参照番号	Address 位置	New Parts 新	Parts No. 部品番号	Description 部品名／規格	Destination 仕向	Remarks 備考
R154			RK73HB1J332J	CHIP R 3.3K J 1/16W	E2E3E9	
R155			RK73HB1J222J	CHIP R 2.2K J 1/16W		
R156,157			RK73HB1J100J	CHIP R 10 J 1/16W		
R158			RK73HB1J332J	CHIP R 3.3K J 1/16W		
R160			RK73HB1J472J	CHIP R 4.7K J 1/16W	XTMM2	
R160			RK73HB1J472J	CHIP R 4.7K J 1/16W	M3M4E	
R160			RK73HB1J472J	CHIP R 4.7K J 1/16W	E2E3E9	
R162			RK73HB1J221J	CHIP R 220 J 1/16W		
R163			RK73HB1J472J	CHIP R 4.7K J 1/16W		
R164			RK73HB1J820J	CHIP R 82 J 1/16W	XTMM2	
R164			RK73HB1J820J	CHIP R 82 J 1/16W	M3M4E	
R164			RK73HB1J820J	CHIP R 82 J 1/16W	E2E3E9	
R165			RK73HB1J270J	CHIP R 27 J 1/16W		
R166			RK73HB1J224J	CHIP R 220K J 1/16W		
R167		*	RK73HB1J124J	CHIP R 120K J 1/16W		
R168			RK73HB1J102J	CHIP R 1.0K J 1/16W		
R169			RK73HB1J392J	CHIP R 3.9K J 1/16W	XTMM2	
R169			RK73HB1J392J	CHIP R 3.9K J 1/16W	M3M4E	
R169			RK73HB1J392J	CHIP R 3.9K J 1/16W	E2E3E9	
R170			RK73HB1J561J	CHIP R 560 J 1/16W		
R171			RK73GB1J680J	CHIP R 68 J 1/16W		
R172			RK73HB1J270J	CHIP R 27 J 1/16W		
R173			RK73HB1J392J	CHIP R 3.9K J 1/16W		
R174			RK73HB1J101J	CHIP R 100 J 1/16W		
R175			RK73HB1J683J	CHIP R 68K J 1/16W	XTMM2	
R175			RK73HB1J683J	CHIP R 68K J 1/16W	M3M4E	
R175			RK73HB1J683J	CHIP R 68K J 1/16W	E2E3E9	
R176,177			RK73HB1J101J	CHIP R 100 J 1/16W		
R179		*	RK73HB1J152J	CHIP R 1.5K J 1/16W		
R180			RK73GB1J680J	CHIP R 68 J 1/16W		
R182			RK73HB1J222J	CHIP R 2.2K J 1/16W		
R183			RK73HB1J473J	CHIP R 47K J 1/16W		
R184		*	RK73HB1J124J	CHIP R 120K J 1/16W		
R185			RK73HB1J222J	CHIP R 2.2K J 1/16W		
R186			RK73HB1J121J	CHIP R 120 J 1/16W		
R187			RK73HB1J332J	CHIP R 3.3K J 1/16W		
R188			RK73HB1J391J	CHIP R 390 J 1/16W	XTMM2	
R188			RK73HB1J391J	CHIP R 390 J 1/16W	M3M4E	
R188			RK73HB1J391J	CHIP R 390 J 1/16W	E2E3E9	
R189			RK73HB1J182J	CHIP R 1.8K J 1/16W	XTMM2	
R189			RK73HB1J182J	CHIP R 1.8K J 1/16W	M3M4E	
R189			RK73HB1J182J	CHIP R 1.8K J 1/16W	E2E3E9	
R190,191			RK73HB1J220J	CHIP R 22 J 1/16W		
R192			RK73HB1J102J	CHIP R 1.0K J 1/16W		
R193			R92-1368-05	CHIP R 0 OHM 1/16W		
R194			R92-0670-05	CHIP R 0 OHM	KP	
R195			RK73HB1J473J	CHIP R 47K J 1/16W		
R196			RK73HB1J103J	CHIP R 10K J 1/16W		
R198			RK73HB1J221J	CHIP R 220 J 1/16W		
R200			RK73HB1J223J	CHIP R 22K J 1/16W		
R301			RK73HB1J101J	CHIP R 100 J 1/16W		
R302,303			RK73HB1J104J	CHIP R 100K J 1/16W		
R304			RK73GB1J103J	CHIP R 10K J 1/16W		
R305			RK73HB1J222J	CHIP R 2.2K J 1/16W		
R306			RK73HB1J102J	CHIP R 1.0K J 1/16W		

PARTS LIST

* New Parts
Parts without Parts No. are not supplied.
Les articles non mentionnes dans le Parts No. ne sont pas fournis.
Teile ohne Parts No. werden nicht geliefert.

TX-RX UNIT(X57-440X-XX)

Ref. No. 参照番号	Address 位置	New Parts 新	Parts No. 部品番号	Description 部品名／規格			Destination 仕向	Remarks 備考
R307			RK73HB1J682J	CHIP R	6.8K	J 1/16W		
R308		*	R92-2539-05	CHIP R	330K	1/16W		
R309		*	RN73HH1J683D	CHIP R	68K	D 1/16W		
R310,311			RK73HB1J100J	CHIP R	10	J 1/16W		
R312			RK73HB1J101J	CHIP R	100	J 1/16W		
R313			RK73HB1J221J	CHIP R	220	J 1/16W		
R315			RK73HB1J122J	CHIP R	1.2K	J 1/16W		
R316			RK73GB1J272J	CHIP R	2.7K	J 1/16W		
R317			RK73HB1J182J	CHIP R	1.8K	J 1/16W		
R318			RK73HB1J563J	CHIP R	56K	J 1/16W		
R319			RK73HB1J153J	CHIP R	15K	J 1/16W	KPXMM2	
R319			RK73HB1J153J	CHIP R	15K	J 1/16W	M3M4	
R320			RK73HB1J561J	CHIP R	560	J 1/16W		
R321			RK73GB1J563J	CHIP R	56K	J 1/16W		
R322,323			RK73HB1J103J	CHIP R	10K	J 1/16W		
R324			RK73GB1J273J	CHIP R	27K	J 1/16W		
R325			RK73HB1J472J	CHIP R	4.7K	J 1/16W		
R326-328			RK73GB1J472J	CHIP R	4.7K	J 1/16W		
R329			RK73HB1J103J	CHIP R	10K	J 1/16W		
R330			RK73GB1J391J	CHIP R	390	J 1/16W		
R331			RK73GB1J104J	CHIP R	100K	J 1/16W		
R332			RK73HB1J472J	CHIP R	4.7K	J 1/16W		
R334,335			RK73HB1J104J	CHIP R	100K	J 1/16W		
R336			RK73HB1J472J	CHIP R	4.7K	J 1/16W		
R337			RK73HB1J102J	CHIP R	1.0K	J 1/16W		
R339			RK73HB1J472J	CHIP R	4.7K	J 1/16W		
R340			RK73HB1J334J	CHIP R	330K	J 1/16W		
R341			RK73GB1J682J	CHIP R	6.8K	J 1/16W		
R342			RK73GB1J223J	CHIP R	22K	J 1/16W		
R343			RK73GB1J103J	CHIP R	10K	J 1/16W		
R344			RK73HB1J472J	CHIP R	4.7K	J 1/16W		
R345			RK73HB1J103J	CHIP R	10K	J 1/16W		
R347,348			RK73GB1J473J	CHIP R	47K	J 1/16W		
R349			RK73HB1J104J	CHIP R	100K	J 1/16W		
R351,352			RK73GB1J473J	CHIP R	47K	J 1/16W		
R353			RK73HB1J273J	CHIP R	27K	J 1/16W		
R354			RK73HB1J100J	CHIP R	10	J 1/16W		
R355			RK73HB1J472J	CHIP R	4.7K	J 1/16W		
R360			RK73HB1J104J	CHIP R	100K	J 1/16W		
R366			RK73GB1J472J	CHIP R	4.7K	J 1/16W		
R368		*	R92-2539-05	CHIP R	330K	1/16W		
R369			RK73HB1J100J	CHIP R	10	J 1/16W		
R370			RK73GB1J913J	CHIP R	91K	J 1/16W		
R371		*	RK73HB1J272J	CHIP R	2.7K	J 1/16W		
R372			RK73HB1J222J	CHIP R	2.2K	J 1/16W		
R373			RK73HB1J332J	CHIP R	3.3K	J 1/16W		
R374			RK73HB1J102J	CHIP R	1.0K	J 1/16W		
R375			RK73HB1J224J	CHIP R	220K	J 1/16W		
R376			RK73HB1J472J	CHIP R	4.7K	J 1/16W		
R377			RK73HB1J222J	CHIP R	2.2K	J 1/16W		
R378			RK73HB1J122J	CHIP R	1.2K	J 1/16W		
R379			RK73HB1J182J	CHIP R	1.8K	J 1/16W		
R380			RK73GB1J102J	CHIP R	1.0K	J 1/16W		
R381,382			RK73HB1J683J	CHIP R	68K	J 1/16W		
R383			RK73HB1J472J	CHIP R	4.7K	J 1/16W		

TH-79 A/E

PARTS LIST

* New Parts
Parts without Parts No. are not supplied.
Les articles non mentionnes dans le Parts No. ne sont pas fournis.
Teile ohne Parts No. werden nicht geliefert.

TX-RX UNIT(X57-440X-XX)

Ref. No. 参照番号	Address 位置	New Parts 新	Parts No. 部品番号	Description 部品名／規格	Destination 仕向	Remarks 備考
R384			RK73HB1J332J	CHIP R 3.3K J 1/16W		
R385			RK73HB1J102J	CHIP R 1.0K J 1/16W		
R386		*	RK73HB1J272J	CHIP R 2.7K J 1/16W		
R387,388			RK73HB1J222J	CHIP R 2.2K J 1/16W		
R389			RK73HB1J472J	CHIP R 4.7K J 1/16W		
R390,391			RK73HB1J221J	CHIP R 220 J 1/16W		
R392,393			RK73HB1J154J	CHIP R 150K J 1/16W		
R394			RK73HB1J102J	CHIP R 1.0K J 1/16W		
R395			RK73GB1J473J	CHIP R 47K J 1/16W		
R396			RK73HB1J222J	CHIP R 2.2K J 1/16W		
R397		*	RK73HB1J272J	CHIP R 2.7K J 1/16W		
R398			RK73HB1J473J	CHIP R 47K J 1/16W		
R399			RK73HB1J102J	CHIP R 1.0K J 1/16W		
R400			RK73HB1J222J	CHIP R 2.2K J 1/16W		
R401		*	RK73HB1J272J	CHIP R 2.7K J 1/16W		
R402			RK73HB1J100J	CHIP R 10 J 1/16W		
R403			R92-0679-05	CHIP R 0 OHM	XTMM2	
R403			R92-0679-05	CHIP R 0 OHM	M2M3E	
R403			R92-0679-05	CHIP R 0 OHM	E2E3E9	
R404			RK73GB1J104J	CHIP R 100K J 1/16W		
R405			RK73HB1J332J	CHIP R 3.3K J 1/16W		
R406			RK73HB1J104J	CHIP R 100K J 1/16W		
R407			RK73GB1J104J	CHIP R 100K J 1/16W		
R408			RK73HB1J100J	CHIP R 10 J 1/16W		
R409			RK73GB1J104J	CHIP R 100K J 1/16W		
R410,411			RK73GB1J680J	CHIP R 68 J 1/16W		
R413			RK73GB1J104J	CHIP R 100K J 1/16W		
R414			RK73HB1J103J	CHIP R 10K J 1/16W		
R415			RK73GB1J474J	CHIP R 470K J 1/16W		
R416,417			RK73GB1J104J	CHIP R 100K J 1/16W		
R418			RK73FB2A2R2J	CHIP R 2.2 J 1/10W		
R419			RK73HB1J182J	CHIP R 1.8K J 1/16W		
R420			RK73GB1J820J	CHIP R 82 J 1/16W		
R421			RK73GB1J680J	CHIP R 68 J 1/16W		
R423			RK73HB1J182J	CHIP R 1.8K J 1/16W		
R424,425			RK73HB1J100J	CHIP R 10 J 1/16W		
R426			RK73HB1J682J	CHIP R 6.8K J 1/16W		
R427			RK73GB1J273J	CHIP R 27K J 1/16W		
R428			RK73GB1J102J	CHIP R 1.0K J 1/16W		
R429			RK73HB1J222J	CHIP R 2.2K J 1/16W		
R430			RK73HB1J472J	CHIP R 4.7K J 1/16W		
R431			RK73HB1J103J	CHIP R 10K J 1/16W		
R432			RK73HB1J472J	CHIP R 4.7K J 1/16W		
R433			RK73HB1J274J	CHIP R 270K J 1/16W		
R434-436			RK73EB2ER39K	CHIP R 0.39 K 1/4W		
R437			RK73GB1J562J	CHIP R 5.6K J 1/16W		
R438			RK73GB1J103J	CHIP R 10K J 1/16W		
R439			RK73GB1J473J	CHIP R 47K J 1/16W		
R440			RK73HB1J123J	CHIP R 12K J 1/16W		
R441			RK73HB1J471J	CHIP R 470 J 1/16W		
R442-445			RK73GB1J121J	CHIP R 120 J 1/16W		
R446			RK73HB1J182J	CHIP R 1.8K J 1/16W		
R447			RK73FB2A101J	CHIP R 100 J 1/10W		
R448			RK73HB1J101J	CHIP R 100 J 1/16W		
R449			RK73GB1J472J	CHIP R 4.7K J 1/16W		

PARTS LIST

× New Parts
Parts without Parts No. are not supplied.
Les articles non mentionnés dans le Parts No. ne sont pas fournis.
Teile ohne Parts No. werden nicht geliefert.

TX-RX UNIT(X57-440X-XX)

Ref. No. 参照番号	Address 位置	New Parts 新	Parts No. 部品番号	Description 部品名／規格	Destination 仕向	Remarks 備考
R450-453			RK73HB1J104J	CHIP R 100K J 1/16W		
R454-458			RK73HB1J472J	CHIP R 4.7K J 1/16W		
R459-464			RK73HB1J222J	CHIP R 2.2K J 1/16W		
R465-467			RK73HB1J104J	CHIP R 100K J 1/16W		
R470			RK73HB1J100J	CHIP R 10 J 1/16W		
R471			RK73HB1J222J	CHIP R 2.2K J 1/16W		
R501,502			RK73GB1J222J	CHIP R 2.2K J 1/16W		
R503-505			RK73HB1J104J	CHIP R 100K J 1/16W		
R506,507			RK73HB1J333J	CHIP R 33K J 1/16W		
R508			RK73GB1J103J	CHIP R 10K J 1/16W		
R509			RK73GB1J223J	CHIP R 22K J 1/16W		
R511			RK73GB1J474J	CHIP R 470K J 1/16W		
R512			RK73GB1J104J	CHIP R 100K J 1/16W		
R513			RK73HB1J223J	CHIP R 22K J 1/16W		
R514,515			RK73HB1J100J	CHIP R 10 J 1/16W		
R516			RK73GB1J563J	CHIP R 56K J 1/16W		
R517,518			RK73HB1J103J	CHIP R 10K J 1/16W		
R519-522			RK73HB1J222J	CHIP R 2.2K J 1/16W		
R524			RK73HB1J222J	CHIP R 2.2K J 1/16W		
R525			RK73GB1J474J	CHIP R 470K J 1/16W		
R526,527			RK73GB1J102J	CHIP R 1.0K J 1/16W		
R528-533			RK73HB1J104J	CHIP R 100K J 1/16W		
R534			RK73FB2A683J	CHIP R 68K J 1/16W		
VR301,302			R12-6717-05	TRIM PØT 47K		
VR303			R12-6713-05	TRIMMING PØT. 10K		
VR304,305			R12-6705-05	TRIM PØT 470		
VR306,307		*	R12-6701-05	TRIMMING PØT. 100		
VR308			R05-3469-05	PØTENTIØMETER 10K(AF VØL A/PS)		
VR309		*	R39-0601-05	PØTENTIØMETER 10K(AF VØL B/ENC)		
S303			S40-1117-05	TACT SWITCH		
S304			S62-0421-05	SLIDE SWITCH		
S305,306		*	S70-0438-05	TACT SWITCH		
D1			DA221	DIØRD		
D2			SFPB-72VL	DIØRD		
D3 ,4			MA742	DIØRD		
D5 -8			MA2S111	DIØRD		
D9 -12			MA77	DIØRD		
D13			MA368	DIØRD		
D15			DA204U	DIØRD		
D16			MA77	DIØRD	XTMM2	
D16			MA77	DIØRD	M3M4E	
D16			MA77	DIØRD	E2E3E9	
D17			DAN222	DIØRD		
D18			MA368	DIØRD		
D19			MA77	DIØRD		
D20			HZU2.0	DIØRD		
D21			MA77	DIØRD		
D22			MA368	DIØRD		
D23 -25			MA77	DIØRD		
D26 ,27			M1809	DIØRD		
D28 -30			MA77	DIØRD		
D31			1SS312	DIØRD		
D32			DAN222	DIØRD		
D33 ,34			DA221	DIØRD		

TH-79 A/E

PARTS LIST

* New Parts
Parts without Parts No. are not supplied.
Les articles non mentionnes dans le Parts No. ne sont pas fournis.
Teile ohne Parts No. werden nicht geliefert.

TX-RX UNIT(X57-440X-XX)

Ref. No. 参照番号	Address 位置	New Parts 新	Parts No. 部品番号	Description 部品名／規格	Destination 仕向	Remarks 備考
D35			MA77	DIØRD		
D301			MA728	DIØRD		
D302			MA2S111	DIØRD	XTEE2	
D302			MA2S111	DIØRD	E3E9	
D302-305			MA2S111	DIØRD	KP	
D302,303			MA2S111	DIØRD	MM2M3	
D304-306			MA2S111	DIØRD	X	
D304-307			MA2S111	DIØRD	E2	
D304-308			MA2S111	DIØRD	TEE3E9	
D305-307			MA2S111	DIØRD	M2M3M4	
D305-308			MA2S111	DIØRD	M	
D307,308			MA2S111	DIØRD	KP	
D309,310			DA227	DIØRD		
D315			MA2S111	DIØRD		
D316			MA8039	DIØRD		
D317			MA2S111	DIØRD		
D318			MA8062	DIØRD		
D319,320		*	B30-2131-05	LED		
D321			MA2S111	DIØRD		
D322,323			MA8039	DIØRD		
D324			DAN222	DIØRD		
D325			MA728	DIØRD		
IC1		*	TK10930V	IC		
IC2			MC3372V	IC		
IC3		*	BU2090FS	IC		
IC4 ,5			MB1511PFV-G-BND	IC(PLL FREQUENCY SYNTHESIZER)		
IC6		*	MC12083D	IC		
IC9		*	KCH17	HIC(UHF VCØ)		
IC10		*	KCH16	HIC(VHF VCØ)		
IC11		*	TC7SU04FU	IC		
IC12			TC4W53FU	IC		
IC301			TC7660MEØA	IC		
IC302		*	AT24C16N10SI2.5	IC		
IC303		*	S-81335HG-KI	IC		
IC304		*	78056GC-016-3B9	IC(CPU)	XTMM2	
IC304		*	78056GC-016-3B9	IC(CPU)	M3M4E	
IC304		*	78056GC-016-3B9	IC(CPU)	E2E3E9	
IC304		*	78056GC-017-3B9	IC(CPU)	KP	
IC305		*	LC73881M	IC		
IC306			S-81235PG-PI	IC		
IC307		*	S-80730SL-AT	IC		
IC308			TA75W558FU	IC		
IC309		*	S-81340HG-KJ	IC		
IC310		*	PST9123NR	IC		
IC312		*	JLC1555F	IC		
IC313			TC4W53FU	IC		
IC314		*	BU2090FS	IC		
IC315,316			NJM2070M	IC(AF AMP)		
IC317			LM301AD	IC(ØP AMP)		
IC318		*	TC7SU04FU	IC		
Q1			2SD1483	TRANSISTØR		
Q3		*	UPA573T	FET		
Q4			2SC4619	TRANSISTØR		
Q5			UMA9	TRANSISTØR		
Q6 ,7		*	UPA573T	FET		

PARTS LIST

* New Parts
Parts without Parts No. are not supplied.
Les articles non mentionnes dans le Parts No. ne sont pas fournis.
Teile ohne Parts No. werden nicht geliefert.

TX-RX UNIT(X57-440X-XX)

Ref. No. 参照番号	Address 位置	New Parts 新	Parts No. 部品番号	Description 部品名／規格	Destination 仕向	Remarks 備考
Q8 ,9			2SC4619	TRANSISTOR		
Q10 ,11			2SC4738(GR)	TRANSISTOR		
Q12		*	UPA573T	FET		
Q14			2SC4617(R)	TRANSISTOR		
Q16			2SC4617(R)	TRANSISTOR		
Q17 ,18			2SA1832(GR)	TRANSISTOR		
Q19 ,20			2SC4738(GR)	TRANSISTOR		
Q21			2SC5066(O)	TRANSISTOR		
Q22			2SC4726(P,Q)	TRANSISTOR		
Q23			UPA572T	FET		
Q24			2SC5066(O)	TRANSISTOR		
Q25			2SK1824	FET		
Q26			2SC5066(O)	TRANSISTOR		
Q27			2SC4726(P,Q)	TRANSISTOR		
Q28			2SC4226(R24)	TRANSISTOR		
Q29			2SC4083(N,P)	TRANSISTOR		
Q30			2SC5066(O)	TRANSISTOR	KP	
Q30 ,31			2SC5066(O)	TRANSISTOR	XTMM2	
Q30 ,31			2SC5066(O)	TRANSISTOR	M3M4E	
Q30 ,31			2SC5066(O)	TRANSISTOR	E2E3E9	
Q32			2SC4738(GR)	TRANSISTOR		
Q33 ,34			2SC3356	TRANSISTOR		
Q35			2SC4726(P,Q)	TRANSISTOR		
Q36			2SK1215(E)	FET		
Q37 ,38			2SC5066(O)	TRANSISTOR	XTMM2	
Q37 ,38			2SC5066(O)	TRANSISTOR	M3M4E	
Q37 ,38			2SC5066(O)	TRANSISTOR	E2E3E9	
Q38			2SC5066(O)	TRANSISTOR	KP	
Q39			3SK274	FET		
Q40			2SK1824	FET		
Q41			2SC5066(O)	TRANSISTOR	XTMM2	
Q41			2SC5066(O)	TRANSISTOR	M3M4E	
Q41			2SC5066(O)	TRANSISTOR	E2E3E9	
Q42			2SK1215(E)	FET		
Q43			2SC5066(O)	TRANSISTOR		
Q44			2SC4726(P,Q)	TRANSISTOR		
Q301			UPA572T	FET		
Q302			2SK1588	FET		
Q303			UMC5	TRANSISTOR		
Q305			UPA572T	FET		
Q306,307			DTB113ZK	DIGITAL TRANSISTOR		
Q308			UMW1	TRANSISTOR		
Q309		*	2SB1188(Q,R)	TRANSISTOR		
Q310			2SC4617(R)	TRANSISTOR		
Q311			2SB1182F5(Q)	TRANSISTOR		
Q312			UMW1	TRANSISTOR		
Q313,314			DTC144EE	DIGITAL TRANSISTOR		
Q315,316			2SC4617(R)	TRANSISTOR		
Q317,318			2SK1824	FET		
Q319		*	UPA573T	FET		
Q320			UPA572T	FET		
Q321,322			2SJ243	FET		
Q323			UPA572T	FET		
Q324		*	UPA573T	FET		
Q325,326			2SJ243	FET		

PARTS LIST

× New Parts
Parts without Parts No. are not supplied.
Les articles non mentionnes dans le Parts No. ne sont pas fournis.
Teile ohne Parts No. werden nicht geliefert.

TX-RX UNIT(X57-440X-XX)

Ref. No. 参照番号	Address 位置	New Parts 新	Parts No. 部品番号	Description 部品名／規格	Destination 仕向	Remarks 備考
Q327			DTC144EE	DIGITAL TRANSISTOR		
Q328			2SK879(Y)	FET		
Q329,330			2SC4617(R)	TRANSISTOR		
Q331,332		*	2SB1188(Q,R)	TRANSISTOR		
Q333,334			DTA144WE	DIGITAL TRANSISTOR		
Q335			2SJ204	FET		
Q336			2SK879(Y)	FET		
Q337			UPA572T	FET		
Q338			2SC4738(GR)	TRANSISTOR		
Q339			2SK1588	FET		
Q340			2SK1824	FET		
TH1		*	TN103S472JT	THERMISTOR		
TH301,302		*	TN103S472JT	THERMISTOR		
TH303,304		*	TN103F102JT	THERMISTOR		