Exploded View (Cabinet) (1/4)

NOTE : The place of the connection of (A) as shown in ( ),
is mentioned in the "Exploded View (Cabinet) (2/4)".

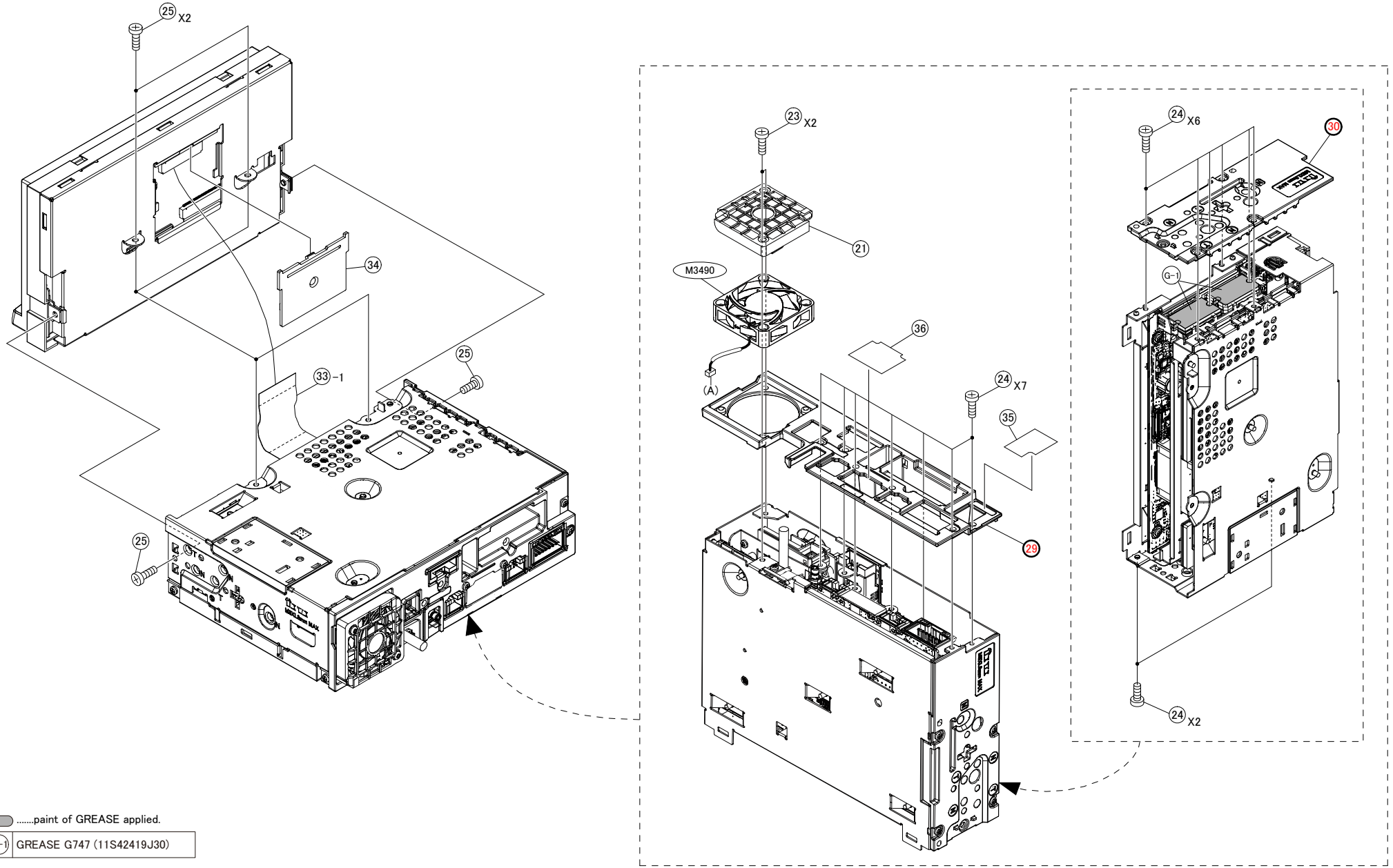

.....paint of GREASE applied.

G-1	GREASE G747 (11S42419J30)

Exploded View (Cabinet) (2/4)

NOTE : The place of the connection of (A) as shown in ( ),
is mentioned in the "Exploded View (Cabinet) (1/4)".

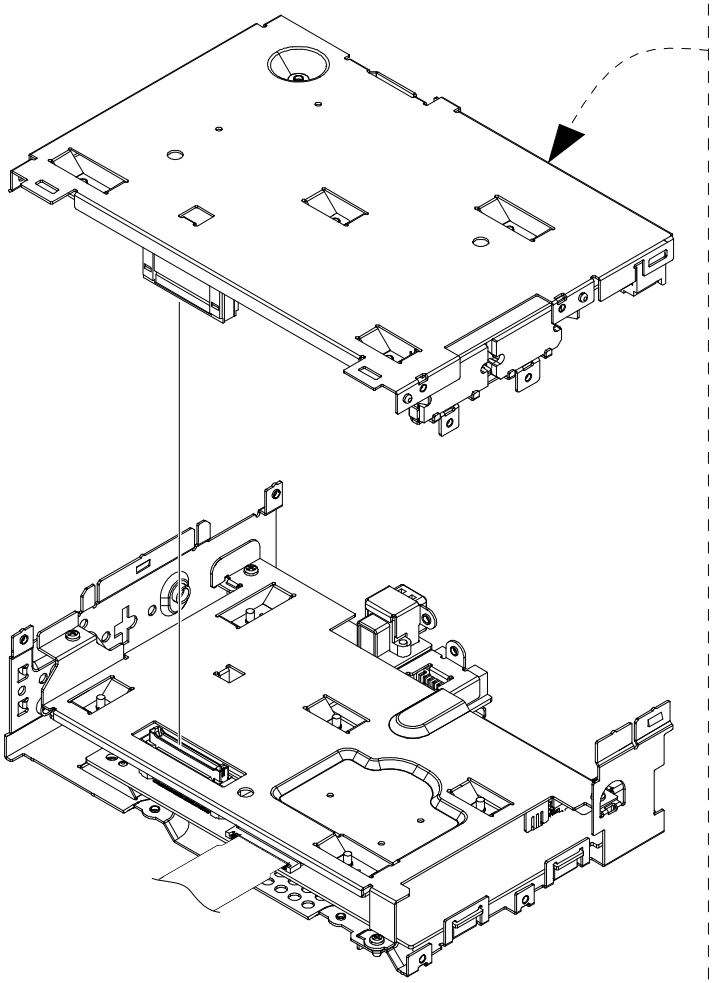

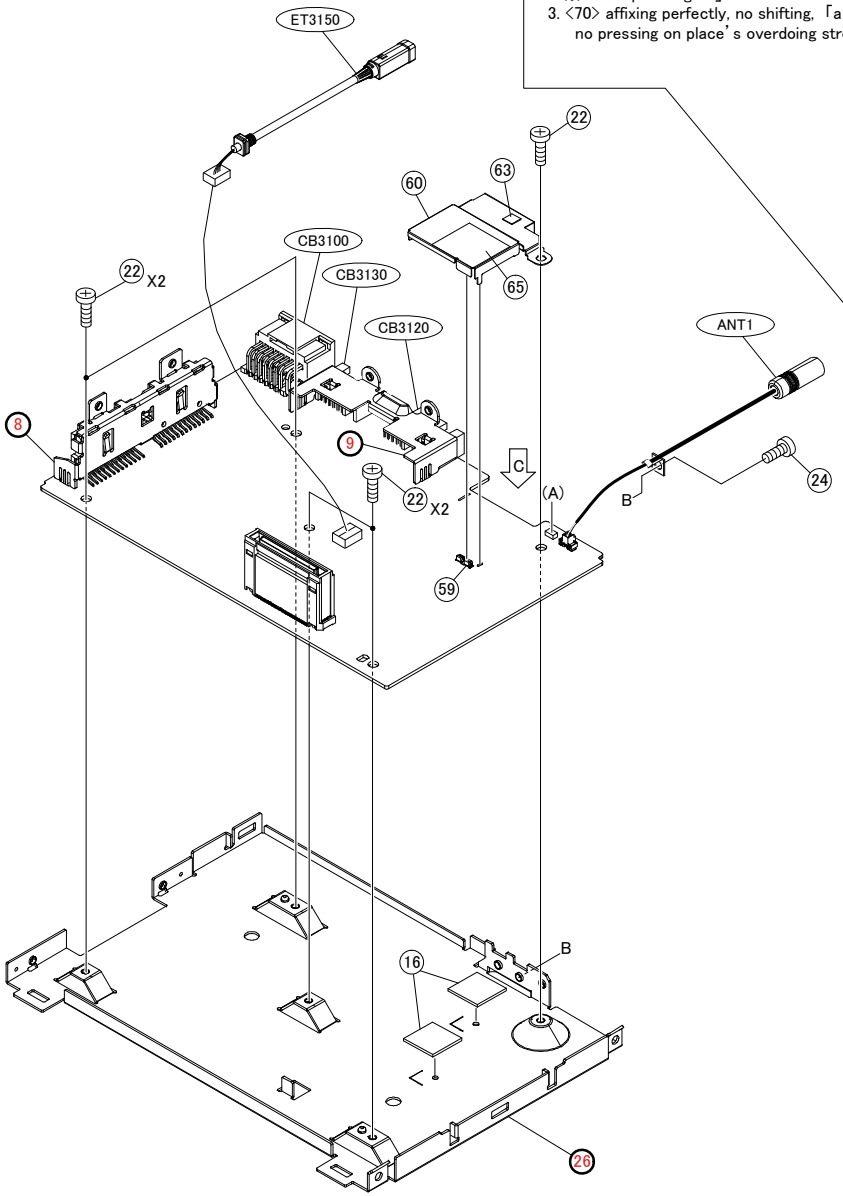

【 Arrow view C 】
<70>affixing standard

1. <70> affixing by the standard of C2216's bottom and E3470's right side, peeling off the protective tape and naturally state to affix.
2. Touch <70>'s affixing side is prohibited. Pressing only「a」of <70> after affixing.
※Forbid pressing「b」!
3. <70> affixing perfectly, no shifting, 「a」 part no floating,
no pressing on place's overdoing strength.

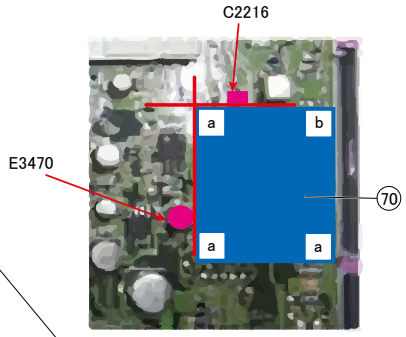

Exploded View (Cabinet) (3/4)

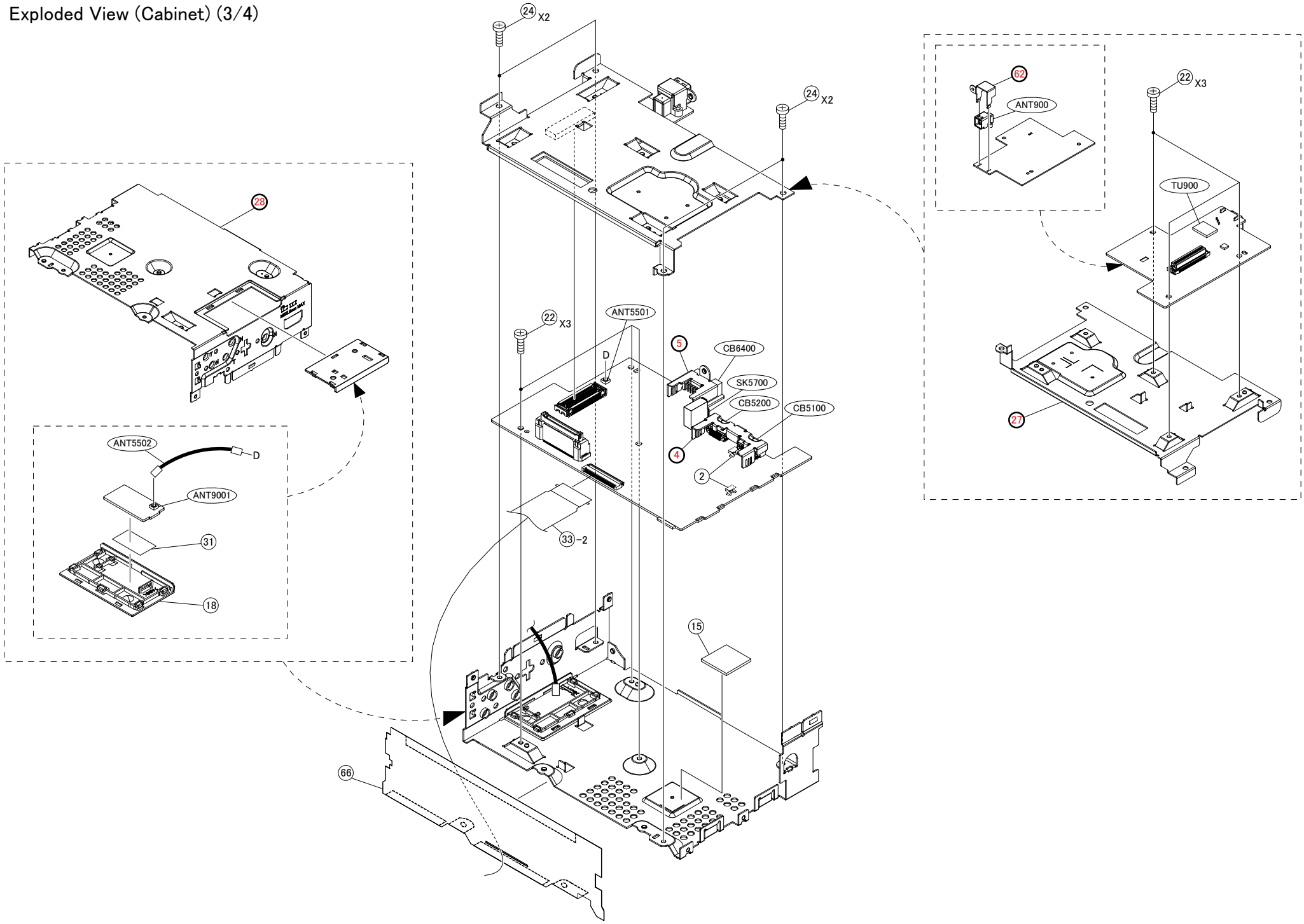

Exploded View (Cabinet) (4/4)

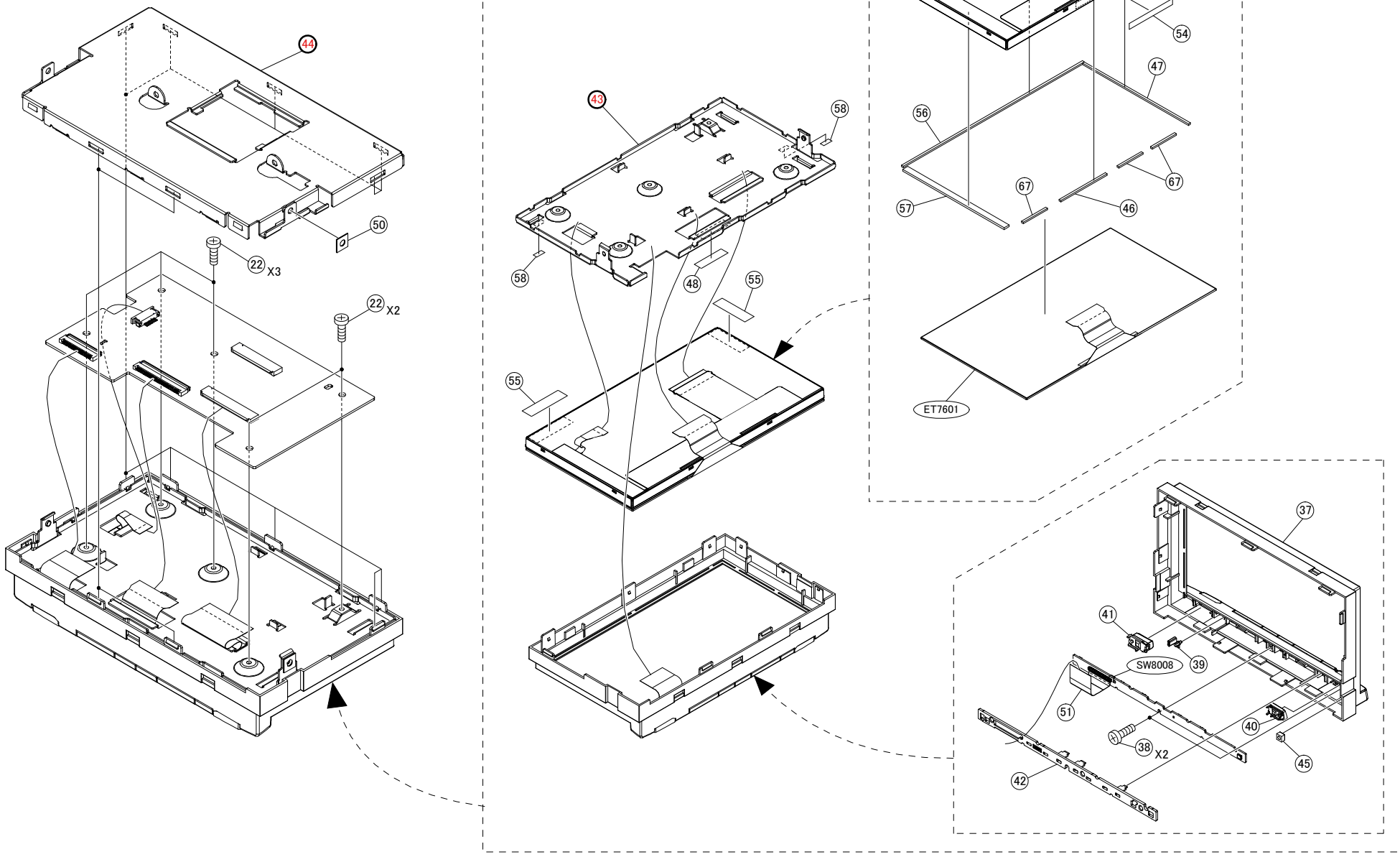

MODEL	Symbol No.	Parts No.	Description
	2	29-22483Z02	OG-453065 -E5
	4	- - - - - - - - -	BKT,CONN HDMI
	5	- - - - - - - - -	BKT,CONN CAN
	8	- - - - - - - - -	BKT,IC
	9	- - - - - - - - -	BKT,CONN PREOUT
	15	75-31381Z02	5580H-1.5-20-20
	16	75-31381Z03	5580H-5.5-12-12
	18	15-29982Z02	COVER,PLATE TOP
	21	15-12877Z02	COVER,FAN
	22	03-12686Z01	SCR,S-T 2.6X6 ZN ATP
	23	03S60822Y31	SCR,S-T 2.6X18 ZN A
	24	03S60822Y10	SCR,S-T 2.6X5 ZN A
	25	03-00340Z01	SCR,S-T 2.6X6 ZB A
	26	- - - - - - - - -	CHAS,BASE
	27	- - - - - - - - -	SHIELD,MIDDLE
	28	- - - - - - - - -	COVER,TOP
	29	- - - - - - - - -	BKT,REAR
	30	- - - - - - - - -	HEAT,SINK
	31	14-28478Z77	INS,CVR 24X14XT0.15
	33	84-31247Z01	FPC,LIMO IMX-DISP
	34	15-29983Z02	COVER,FPC
	35	14-30499Z01	INS,REAR LVDS
	36	14-30500Z01	INS,REAR KEY
	37	EN-30008Z25	NOSE,MONITOR ASSY
	38	03S60823Y01	SCR,P-T 1.7X6 ZN A
	39	36-29976Z02	KNOB,RESET

MODEL	Symbol No.	Parts No.	Description
	40	36-31160Z07	KNOB,AUDIO ASSY
	41	36-31160Z08	KNOB,NAVI ASSY
	42	15-29981Z02	COVER,PWB KEY
	43	- - - - - - - - -	BKT,LCD
	44	- - - - - - - - -	BKT,MONITOR
	45	75-26016Z01	CUS,RUB MIC
	46	14-37616Z30	INS,CVR 54X2XT1.0
	47	14-31238Z10	INS,CVR 84X2XT1
	48	75-26715Z38	CUS,RUB 25X4XT1
	50	14-30498Z01	INS,NOSE SIDE
	51	30-15488Z23	SML2CD-40X33.5-BDX6
	54	75-26715Z46	CUS,RUB 45X7XT0.5
	55	14-31238Z23	INS,CVR 20X7XT0.5
	56	14-31238Z22	INS,CVR 163X2XT1
	57	14-31238Z08	INS,CVR 81.2X4XT1
	58	32-26196Z01	GASKET,65TSV5-3-8.5
	59	29-22540Z01	OGCP-702020 -E4
	60	26-31254Z02	SHIELD,RADIO
	62	- - - - - - - - -	BKT,CONN GPS
	65	14-15738Z01	HMSZW8001A_20X20
	66	75-38220Z01	CUS,CHAS
	67	14-37616Z29	INS,CVR 20X2XT1.0
	70	14-39786Z01	EFF4(03)-38X30T0800
	ANT1	09-17241Z06	ASSY,ANID-0116-06A
	ANT5501	09-07494Z01	U.FL-R-SMT-1(80)-E2
	ANT5502	09-24492Z04	ASSY,U.FL-2LP-066N1

MODEL	Symbol No.	Parts No.	Description
	ANT900	09T45601Y01	GT5-1P-DS(70) -DB
	ANT9001	09-07494Z01	U.FL-R-SMT-1(80)-E2
	CB3100	09T35473Y16	WTB,F169B001-16 -DB
	CB3120	09-25106Z01	WTB,S10B-PUDSS-1 -DB
	CB3130	09-25106Z02	WTB,S12B-PUDSS-1 -DB
	CB5100	09-25213Z01	WTB,TCX3400-011187-T
	CB5200	09-25213Z01	WTB,TCX3400-011187-T
	CB6400	09-25106Z05	WTB,S18B-PUDSS-1 -DB
	ET3150	09-19615Z02	ASSY,ANID-0139-02A
	ET7601	40-29927Z01	ASSY,HCDSS0A002D
	LCD7500	65-30872Z01	ASSY,A070VTN03.0
	M3490	59-14185Z03	MOTOR,ASB0412MA-9D11
	SK5700	09-34073Z01	SKT,48204-0001 -DB
	SW8008	40T65353Y01	SW,TACT SKRPACE010E2
	TU900	TU-34948Z01	GPS GV-8720B -EA
	G-1	11S42419J30	GREASE G747

Packing Method View

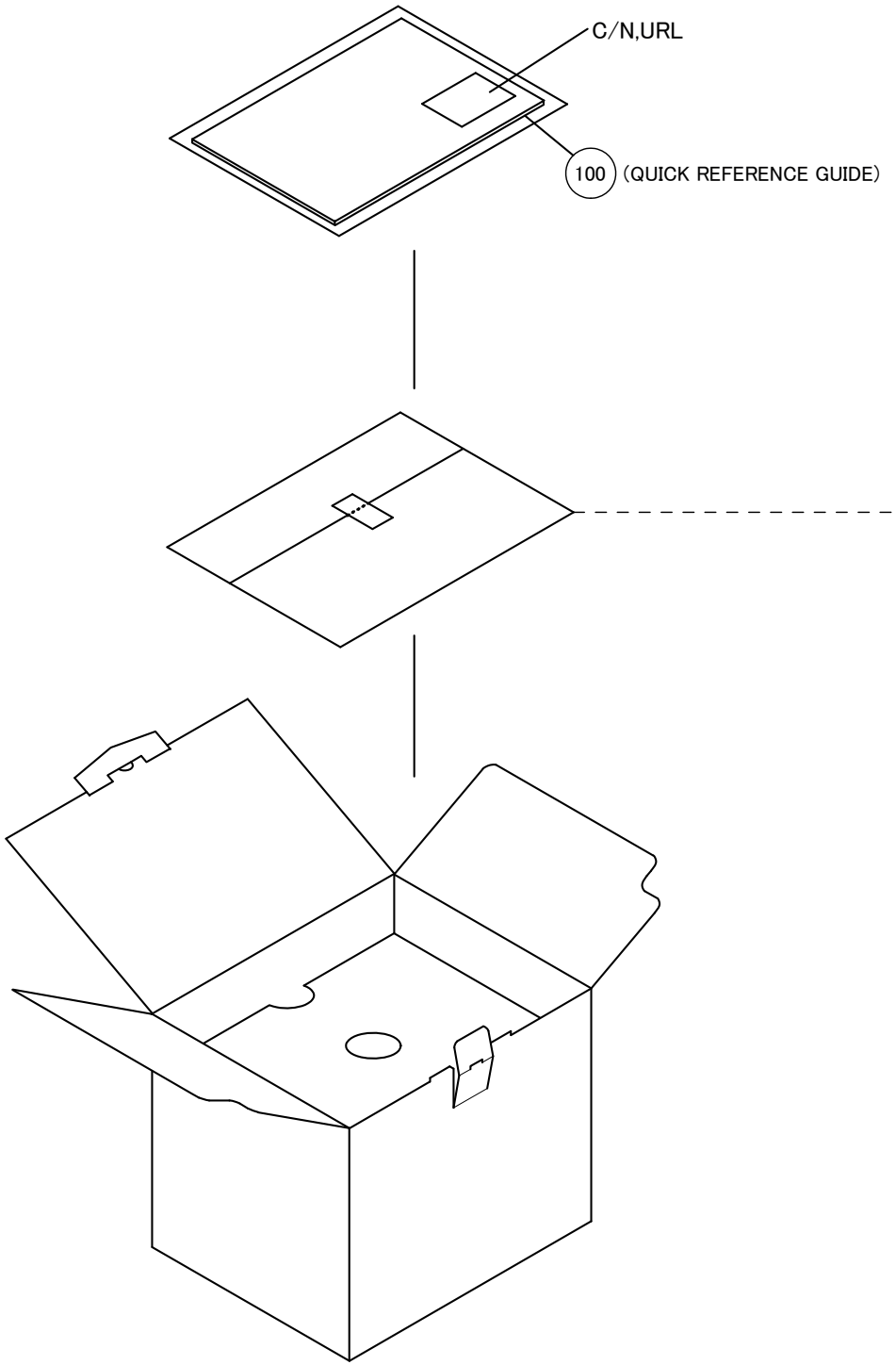

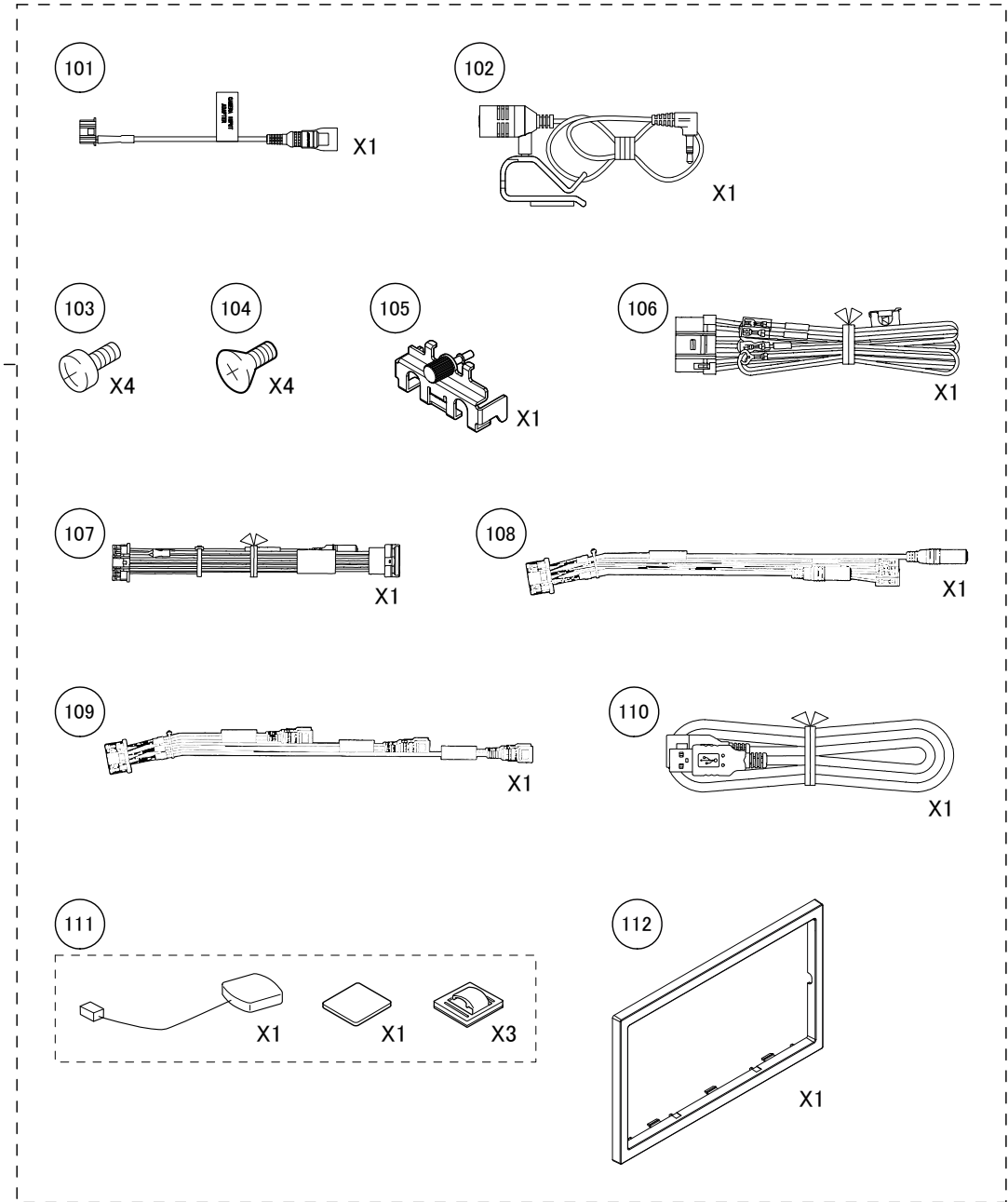

MODEL	Symbol No.	Parts No.	Description
	100	68-38492Z05	C/N QRG AOAM AOTH
	101	09-18014Z01	ASSY,ANID-0125-01A
	102	50-14386Z03	ASSY,LYS-M9750-FUL
	103	03S60820Y17	SCR,MCH 5X8 ZN A
	104	03S60820Y16	SCR,MCH 5X8 ZN A
	105	07-30181Z03	BKT,HDMI ASSY
	106	09-17244Z09	ASSY,ANIC-0050-09A
	107	09-31132Z01	ASSY,ANID-0204-01A
	108	09-31131Z01	ASSY,ANID-0203-01A
	109	09-31130Z01	ASSY,ANID-0202-01A
	110	09-22649Z04	ASSY,ANID-0179-04A
	111	85-34947Z01	ASSY,YOP-5270AL01
	112	33-12546Z02	FACE,PLATE

P.W.Board	MIS	MODEL	Ref.	Parts No.	Parts Name
AUDIO-P.W.Board			ANT1	09-17241Z06	ASSY,ANID-0116-06A
AUDIO-P.W.Board			C2000	08S45231Y17	CAP,CER 22RJ-CH1H-CP
AUDIO-P.W.Board			C2001	08S45231Y17	CAP,CER 22RJ-CH1H-CP
AUDIO-P.W.Board			C2002	08S45231Y11	CAP,CER 8R0D-CH1H-CP
AUDIO-P.W.Board			C2003	08S45231Y12	CAP,CER 9R0D-CH1H-CP
AUDIO-P.W.Board			C2004	08S45232Y05	CAP,CER 102K-B1H -CP
AUDIO-P.W.Board			C2005	08S45232Y05	CAP,CER 102K-B1H -CP
AUDIO-P.W.Board			C2006	08S45232Y05	CAP,CER 102K-B1H -CP
AUDIO-P.W.Board			C2008	08S45232Y21	CAP,CER 104K-B1A-CP
AUDIO-P.W.Board			C2009	08S65669Y03	CAP,CER 224KX7R1H-CP
AUDIO-P.W.Board			C2010	08S45676W93	CAP,CER 224K-B1A -CP
AUDIO-P.W.Board			C2011	08S45676W93	CAP,CER 224K-B1A -CP
AUDIO-P.W.Board			C2012	08S45676W93	CAP,CER 224K-B1A -CP
AUDIO-P.W.Board			C2013	08S45676W93	CAP,CER 224K-B1A -CP
AUDIO-P.W.Board			C2014	08S45676W93	CAP,CER 224K-B1A -CP
AUDIO-P.W.Board			C2015	08-15113Z03	CAP,CER 475KX7R1C-CP
AUDIO-P.W.Board			C2017	08S45232Y21	CAP,CER 104K-B1A-CP
AUDIO-P.W.Board			C2018	08S45232Y21	CAP,CER 104K-B1A-CP
AUDIO-P.W.Board			C2019	08S45232Y21	CAP,CER 104K-B1A-CP
AUDIO-P.W.Board			C2020	08S45232Y21	CAP,CER 104K-B1A-CP
AUDIO-P.W.Board			C2021	08S45232Y21	CAP,CER 104K-B1A-CP
AUDIO-P.W.Board			C2023	08S45232Y21	CAP,CER 104K-B1A-CP
AUDIO-P.W.Board			C2024	08S45232Y21	CAP,CER 104K-B1A-CP
AUDIO-P.W.Board			C2050	08S45231Y31	CAP,CER 331J-CH1H-CP
AUDIO-P.W.Board			C2180	08-23325Z19	CAP,CER 224KX7R1C-CP
AUDIO-P.W.Board			C2190	08S45232Y21	CAP,CER 104K-B1A-CP

P.W.Board	MIS	MODEL	Ref.	Parts No.	Parts Name
AUDIO-P.W.Board			C2192	08S45232Y21	CAP,CER 104K-B1A-CP
AUDIO-P.W.Board			C2201	08S65668Y05	CAP,CER 224KX5R1A-CP
AUDIO-P.W.Board			C2206	08S45676W73	CAP,CER.103K-B1H -CP
AUDIO-P.W.Board			C2208	08-15113Z01	CAP,CER 225KX7R1C-CP
AUDIO-P.W.Board			C2209	08-15113Z01	CAP,CER 225KX7R1C-CP
AUDIO-P.W.Board			C2210	08-15113Z01	CAP,CER 225KX7R1C-CP
AUDIO-P.W.Board			C2211	08-15113Z01	CAP,CER 225KX7R1C-CP
AUDIO-P.W.Board			C2212	08S45231Y38	CAP,CER 102J-CH1H-CP
AUDIO-P.W.Board			C2213	08-23326Z03	CAP,CER 224KX7R1A-CP
AUDIO-P.W.Board			C2214	08-23325Z04	CAP,CER 332KX7R1H-CP
AUDIO-P.W.Board			C2215	08S45232Y21	CAP,CER 104K-B1A-CP
AUDIO-P.W.Board			C2216	08S65669Y05	CAP,CER 106KX7R0J-CP
AUDIO-P.W.Board			C2217	08S45232Y21	CAP,CER 104K-B1A-CP
AUDIO-P.W.Board			C2218	08S45232Y21	CAP,CER 104K-B1A-CP
AUDIO-P.W.Board			C2219	08S45232Y21	CAP,CER 104K-B1A-CP
AUDIO-P.W.Board			C2220	08S45232Y21	CAP,CER 104K-B1A-CP
AUDIO-P.W.Board			C2221	08S45231Y38	CAP,CER 102J-CH1H-CP
AUDIO-P.W.Board			C2222	08-23325Z07	CAP,CER 103KX7R1C-CP
AUDIO-P.W.Board			C2223	08S45676W65	CAP,CER.222K-B1H -CP
AUDIO-P.W.Board			C2224	08-23325Z07	CAP,CER 103KX7R1C-CP
AUDIO-P.W.Board			C2225	08S45232Y21	CAP,CER 104K-B1A-CP
AUDIO-P.W.Board			C2226	08S45232Y21	CAP,CER 104K-B1A-CP
AUDIO-P.W.Board			C2227	08-23325Z04	CAP,CER 332KX7R1H-CP
AUDIO-P.W.Board			C2228	08S45232Y21	CAP,CER 104K-B1A-CP
AUDIO-P.W.Board			C2229	08S45231Y13	CAP,CER 10RD-CH1H-CP
AUDIO-P.W.Board			C2230	08S45232Y21	CAP,CER 104K-B1A-CP

P.W.Board	MIS	MODEL	Ref.	Parts No.	Parts Name
AUDIO-P.W.Board			C2231	08S45231Y13	CAP,CER 10RD-CH1H-CP
AUDIO-P.W.Board			C2232	08S45231Y38	CAP,CER 102J-CH1H-CP
AUDIO-P.W.Board			C2234	08S45232Y21	CAP,CER 104K-B1A-CP
AUDIO-P.W.Board			C2235	08S45232Y21	CAP,CER 104K-B1A-CP
AUDIO-P.W.Board			C2236	08S45232Y21	CAP,CER 104K-B1A-CP
AUDIO-P.W.Board			C2237	08S45232Y21	CAP,CER 104K-B1A-CP
AUDIO-P.W.Board			C2238	08S45232Y21	CAP,CER 104K-B1A-CP
AUDIO-P.W.Board			C2239	08S65676Y05	CAP,CER 105KX7R1E-CP
AUDIO-P.W.Board			C2240	08S65676Y02	CAP,CER 475KX7R1A-CP
AUDIO-P.W.Board			C2241	08-23325Z04	CAP,CER 332KX7R1H-CP
AUDIO-P.W.Board			C2242	08-23325Z04	CAP,CER 332KX7R1H-CP
AUDIO-P.W.Board			C2243	08S45232Y21	CAP,CER 104K-B1A-CP
AUDIO-P.W.Board			C2244	08-23325Z04	CAP,CER 332KX7R1H-CP
AUDIO-P.W.Board			C2245	08-23325Z04	CAP,CER 332KX7R1H-CP
AUDIO-P.W.Board			C2246	08S45232Y21	CAP,CER 104K-B1A-CP
AUDIO-P.W.Board			C2247	08S45232Y21	CAP,CER 104K-B1A-CP
AUDIO-P.W.Board			C2248	08S45232Y21	CAP,CER 104K-B1A-CP
AUDIO-P.W.Board			C2249	08S45232Y21	CAP,CER 104K-B1A-CP
AUDIO-P.W.Board			C2250	08S45232Y21	CAP,CER 104K-B1A-CP
AUDIO-P.W.Board			C2251	08S45232Y21	CAP,CER 104K-B1A-CP
AUDIO-P.W.Board			C2252	08S45232Y21	CAP,CER 104K-B1A-CP
AUDIO-P.W.Board			C2253	08S45232Y21	CAP,CER 104K-B1A-CP
AUDIO-P.W.Board			C2254	08-23325Z04	CAP,CER 332KX7R1H-CP
AUDIO-P.W.Board			C2255	08-23325Z04	CAP,CER 332KX7R1H-CP
AUDIO-P.W.Board			C2256	08S45232Y21	CAP,CER 104K-B1A-CP
AUDIO-P.W.Board			C2257	08S45231Y31	CAP,CER 331J-CH1H-CP

P.W.Board	MIS	MODEL	Ref.	Parts No.	Parts Name
AUDIO-P.W.Board			C2258	08S45231Y31	CAP,CER 331J-CH1H-CP
AUDIO-P.W.Board			C2259	08S45232Y21	CAP,CER 104K-B1A-CP
AUDIO-P.W.Board			C2400	08S65669Y03	CAP,CER 224KX7R1H-CP
AUDIO-P.W.Board			C2401	08-30898Z01	CAP,TF 155K-1C -CP
AUDIO-P.W.Board			C2402	08-30898Z01	CAP,TF 155K-1C -CP
AUDIO-P.W.Board			C2403	08-30898Z01	CAP,TF 155K-1C -CP
AUDIO-P.W.Board			C2404	08-30898Z01	CAP,TF 155K-1C -CP
AUDIO-P.W.Board			C2405	08S65670Y03	CAP,CER 335KX5R1E-CP
AUDIO-P.W.Board			C2406	08S65670Y03	CAP,CER 335KX5R1E-CP
AUDIO-P.W.Board			C2407	08S45676W85	CAP,CER 104K-B1C -CP
AUDIO-P.W.Board			C2408	08S65669Y03	CAP,CER 224KX7R1H-CP
AUDIO-P.W.Board			C2409	08S65669Y03	CAP,CER 224KX7R1H-CP
AUDIO-P.W.Board			C2410	08S65669Y03	CAP,CER 224KX7R1H-CP
AUDIO-P.W.Board			C2411	08S65669Y03	CAP,CER 224KX7R1H-CP
AUDIO-P.W.Board			C2412	08S65669Y03	CAP,CER 224KX7R1H-CP
AUDIO-P.W.Board			C2413	08S65669Y03	CAP,CER 224KX7R1H-CP
AUDIO-P.W.Board			C2414	08S65669Y03	CAP,CER 224KX7R1H-CP
AUDIO-P.W.Board			C2416	08S65669Y03	CAP,CER 224KX7R1H-CP
AUDIO-P.W.Board			C2417	08S65669Y03	CAP,CER 224KX7R1H-CP
AUDIO-P.W.Board			C2418	08S45232Y08	CAP,CER 332K-B1H -CP
AUDIO-P.W.Board			C2419	08S45231Y17	CAP,CER 22RJ-CH1H-CP
AUDIO-P.W.Board			C2420	08-30898Z01	CAP,TF 155K-1C -CP
AUDIO-P.W.Board			C2421	08-30898Z01	CAP,TF 155K-1C -CP
AUDIO-P.W.Board			C2422	08-30898Z01	CAP,TF 155K-1C -CP
AUDIO-P.W.Board			C2423	08-30898Z01	CAP,TF 155K-1C -CP
AUDIO-P.W.Board			C2424	08-15113Z03	CAP,CER 475KX7R1C-CP

P.W.Board	MIS	MODEL	Ref.	Parts No.	Parts Name
AUDIO-P.W.Board			C2425	08-15113Z03	CAP,CER 475KX7R1C-CP
AUDIO-P.W.Board			C2426	08S45231Y13	CAP,CER 10RD-CH1H-CP
AUDIO-P.W.Board			C2427	08S45231Y13	CAP,CER 10RD-CH1H-CP
AUDIO-P.W.Board			C2428	08S65670Y03	CAP,CER 335KX5R1E-CP
AUDIO-P.W.Board			C2429	08S65670Y03	CAP,CER 335KX5R1E-CP
AUDIO-P.W.Board			C2430	08S45231Y13	CAP,CER 10RD-CH1H-CP
AUDIO-P.W.Board			C2431	08S45231Y13	CAP,CER 10RD-CH1H-CP
AUDIO-P.W.Board			C2432	08S45231Y13	CAP,CER 10RD-CH1H-CP
AUDIO-P.W.Board			C2433	08S45231Y13	CAP,CER 10RD-CH1H-CP
AUDIO-P.W.Board			C2434	08S65670Y03	CAP,CER 335KX5R1E-CP
AUDIO-P.W.Board			C2435	08S65670Y03	CAP,CER 335KX5R1E-CP
AUDIO-P.W.Board			C2436	08S35350Y04	CAP,CER 105K-B1C -CP
AUDIO-P.W.Board			C2437	08S45231Y17	CAP,CER 22RJ-CH1H-CP
AUDIO-P.W.Board			C2440	08S65677Y06	CAP,CER 226MX7R1C-CP
AUDIO-P.W.Board			C2441	08S65677Y06	CAP,CER 226MX7R1C-CP
AUDIO-P.W.Board			C2442	08S65676Y05	CAP,CER 105KX7R1E-CP
AUDIO-P.W.Board			C2443	08S65676Y05	CAP,CER 105KX7R1E-CP
AUDIO-P.W.Board			C2444	08S65677Y06	CAP,CER 226MX7R1C-CP
AUDIO-P.W.Board			C2445	08S45232Y21	CAP,CER 104K-B1A-CP
AUDIO-P.W.Board			C2446	08S65669Y03	CAP,CER 224KX7R1H-CP
AUDIO-P.W.Board			C2447	08S65676Y10	CAP,CER 106KX7R1C-CP
AUDIO-P.W.Board			C2449	08S65670Y01	CAP,CER 106KX5R1C-CP
AUDIO-P.W.Board			C2450	08S35350Y04	CAP,CER 105K-B1C -CP
AUDIO-P.W.Board			C2452	08S35350Y04	CAP,CER 105K-B1C -CP
AUDIO-P.W.Board			C2453	08S45231Y17	CAP,CER 22RJ-CH1H-CP
AUDIO-P.W.Board			C2454	08S65669Y03	CAP,CER 224KX7R1H-CP

P.W.Board	MIS	MODEL	Ref.	Parts No.	Parts Name
AUDIO-P.W.Board			C2456	08S35350Y04	CAP,CER 105K-B1C -CP
AUDIO-P.W.Board			C2457	08S45676W85	CAP,CER 104K-B1C -CP
AUDIO-P.W.Board			C2458	08S35350Y04	CAP,CER 105K-B1C -CP
AUDIO-P.W.Board			C2459	08S35350Y04	CAP,CER 105K-B1C -CP
AUDIO-P.W.Board			C2460	08S65670Y03	CAP,CER 335KX5R1E-CP
AUDIO-P.W.Board			C2461	08S65670Y03	CAP,CER 335KX5R1E-CP
AUDIO-P.W.Board			C2462	08S65670Y03	CAP,CER 335KX5R1E-CP
AUDIO-P.W.Board			C2463	08S65670Y03	CAP,CER 335KX5R1E-CP
AUDIO-P.W.Board			C2464	08S65669Y03	CAP,CER 224KX7R1H-CP
AUDIO-P.W.Board			C2465	08S45676W85	CAP,CER 104K-B1C -CP
AUDIO-P.W.Board			C2466	08S45232Y21	CAP,CER 104K-B1A-CP
AUDIO-P.W.Board			C2468	08S45231Y17	CAP,CER 22RJ-CH1H-CP
AUDIO-P.W.Board			C2470	08S65676Y10	CAP,CER 106KX7R1C-CP
AUDIO-P.W.Board			C2472	08S45232Y21	CAP,CER 104K-B1A-CP
AUDIO-P.W.Board			C2505	08S45232Y21	CAP,CER 104K-B1A-CP
AUDIO-P.W.Board			C2506	08S45232Y21	CAP,CER 104K-B1A-CP
AUDIO-P.W.Board			C2507	08S45232Y21	CAP,CER 104K-B1A-CP
AUDIO-P.W.Board			C2508	08S35374W12	CAP,CER 106K-B0J -CP
AUDIO-P.W.Board			C2509	08S45231Y11	CAP,CER 8R0D-CH1H-CP
AUDIO-P.W.Board			C2510	08S45231Y13	CAP,CER 10RD-CH1H-CP
AUDIO-P.W.Board			C2511	08-32878Z05	CAP,CER105KX7R1AQ2CP
AUDIO-P.W.Board			C2512	08S35349Y17	CAP,CER 225K-B0J -CP
AUDIO-P.W.Board			C2513	08S45232Y21	CAP,CER 104K-B1A-CP
AUDIO-P.W.Board			C2514	08S35349Y17	CAP,CER 225K-B0J -CP
AUDIO-P.W.Board			C2519	08S45676W85	CAP,CER 104K-B1C -CP
AUDIO-P.W.Board			C2523	08S35374W12	CAP,CER 106K-B0J -CP

P.W.Board	MIS	MODEL	Ref.	Parts No.	Parts Name
AUDIO-P.W.Board			C2524	08S45232Y21	CAP,CER 104K-B1A-CP
AUDIO-P.W.Board			C2600	08-30898Z02	CAP,TF 105K-1E -CP
AUDIO-P.W.Board			C2601	08-30898Z02	CAP,TF 105K-1E -CP
AUDIO-P.W.Board			C2602	08-30898Z02	CAP,TF 105K-1E -CP
AUDIO-P.W.Board			C2603	08-30898Z02	CAP,TF 105K-1E -CP
AUDIO-P.W.Board			C2604	08-30898Z02	CAP,TF 105K-1E -CP
AUDIO-P.W.Board			C2605	08-30898Z02	CAP,TF 105K-1E -CP
AUDIO-P.W.Board			C2606	08-30898Z02	CAP,TF 105K-1E -CP
AUDIO-P.W.Board			C2607	08S65676Y03	CAP,CER 225KX7R1C-CP
AUDIO-P.W.Board			C2611	08-30898Z02	CAP,TF 105K-1E -CP
AUDIO-P.W.Board			C2612	08-23326Z05	CAP,CER 105KX7R1A-CP
AUDIO-P.W.Board			C2613	08S65669Y03	CAP,CER 224KX7R1H-CP
AUDIO-P.W.Board			C2650	08-23326Z05	CAP,CER 105KX7R1A-CP
AUDIO-P.W.Board			C2800	08S45232Y21	CAP,CER 104K-B1A-CP
AUDIO-P.W.Board			C2850	08S45231Y11	CAP,CER 8R0D-CH1H-CP
AUDIO-P.W.Board			C2851	08S45231Y38	CAP,CER 102J-CH1H-CP
AUDIO-P.W.Board			C2852	08S45231Y12	CAP,CER 9R0D-CH1H-CP
AUDIO-P.W.Board			C2853	08S45676W93	CAP,CER 224K-B1A -CP
AUDIO-P.W.Board			C2854	08S45232Y21	CAP,CER 104K-B1A-CP
AUDIO-P.W.Board			C2855	08S65677Y06	CAP,CER 226MX7R1C-CP
AUDIO-P.W.Board			C2901	08S65669Y06	CAP,CER 103KX7R1H-CP
AUDIO-P.W.Board			C2903	08S45677W16	CAP,CER.15RJ-CH1H-CP
AUDIO-P.W.Board			C2905	08S45677W60	CAP,CER 102J-CH1H-CP
AUDIO-P.W.Board			C2906	08S45231Y06	CAP,CER 3R0C-CJ1H-CP
AUDIO-P.W.Board			C2907	08S45231Y15	CAP,CER 15RJ-CH1H-CP
AUDIO-P.W.Board			C2908	08S45231Y21	CAP,CER 47RJ-CH1H-CP

P.W.Board	MIS	MODEL	Ref.	Parts No.	Parts Name
AUDIO-P.W.Board			C2912	08S45231Y04	CAP,CER 1R5C-CK1H-CP
AUDIO-P.W.Board			C2913	08S45231Y16	CAP,CER 18RJ-CH1H-CP
AUDIO-P.W.Board			C2914	08S45231Y38	CAP,CER 102J-CH1H-CP
AUDIO-P.W.Board			C2918	08S45231Y24	CAP,CER 82RJ-CH1H-CP
AUDIO-P.W.Board			C2950	08S45677W60	CAP,CER 102J-CH1H-CP
AUDIO-P.W.Board			C2960	08S45231Y13	CAP,CER 10RD-CH1H-CP
AUDIO-P.W.Board			C2962	08S45231Y21	CAP,CER 47RJ-CH1H-CP
AUDIO-P.W.Board			C2963	08S35350Y04	CAP,CER 105K-B1C -CP
AUDIO-P.W.Board			C2964	08-19311Z01	CAP,CER 104KX7R1H-CP
AUDIO-P.W.Board			C2965	08S45677W60	CAP,CER 102J-CH1H-CP
AUDIO-P.W.Board			C2966	08S65676Y08	CAP,CER 106K-X7R1ACP
AUDIO-P.W.Board			C3002	08S45231Y14	CAP,CER 12RJ-CH1H-CP
AUDIO-P.W.Board			C3017	08S45232Y21	CAP,CER 104K-B1A-CP
AUDIO-P.W.Board			C3018	08S45232Y21	CAP,CER 104K-B1A-CP
AUDIO-P.W.Board			C3019	08S45232Y21	CAP,CER 104K-B1A-CP
AUDIO-P.W.Board			C3020	08S45232Y21	CAP,CER 104K-B1A-CP
AUDIO-P.W.Board			C3021	08S45232Y21	CAP,CER 104K-B1A-CP
AUDIO-P.W.Board			C3022	08S45232Y21	CAP,CER 104K-B1A-CP
AUDIO-P.W.Board			C3026	08S45232Y21	CAP,CER 104K-B1A-CP
AUDIO-P.W.Board			C3029	08-23325Z19	CAP,CER 224KX7R1C-CP
AUDIO-P.W.Board			C3030	08S65676Y08	CAP,CER 106K-X7R1ACP
AUDIO-P.W.Board			C3031	08S65676Y08	CAP,CER 106K-X7R1ACP
AUDIO-P.W.Board			C3032	08S65676Y08	CAP,CER 106K-X7R1ACP
AUDIO-P.W.Board			C3047	08S45231Y14	CAP,CER 12RJ-CH1H-CP
AUDIO-P.W.Board			C3101	08-26091Z01	CAP,CER 102KX7R2J-CP
AUDIO-P.W.Board			C3103	08-26091Z01	CAP,CER 102KX7R2J-CP

P.W.Board	MIS	MODEL	Ref.	Parts No.	Parts Name
AUDIO-P.W.Board			C3104	08-26091Z05	CAP,CER 103KX7R2J-CP
AUDIO-P.W.Board			C3130	08S45231Y38	CAP,CER 102J-CH1H-CP
AUDIO-P.W.Board			C3131	08S45231Y38	CAP,CER 102J-CH1H-CP
AUDIO-P.W.Board			C3132	08S45231Y38	CAP,CER 102J-CH1H-CP
AUDIO-P.W.Board			C3133	08S45231Y38	CAP,CER 102J-CH1H-CP
AUDIO-P.W.Board			C3134	08S45231Y38	CAP,CER 102J-CH1H-CP
AUDIO-P.W.Board			C3135	08S45231Y38	CAP,CER 102J-CH1H-CP
AUDIO-P.W.Board			C3136	08S45231Y38	CAP,CER 102J-CH1H-CP
AUDIO-P.W.Board			C3150	08S45677W44	CAP,CER.221J-CH1H-CP
AUDIO-P.W.Board			C3151	08S45677W44	CAP,CER.221J-CH1H-CP
AUDIO-P.W.Board			C3152	08S45677W44	CAP,CER.221J-CH1H-CP
AUDIO-P.W.Board			C3153	08S65669Y03	CAP,CER 224KX7R1H-CP
AUDIO-P.W.Board			C3203	08S45231Y25	CAP,CER 101J-CH1H-CP
AUDIO-P.W.Board			C3204	08S45231Y38	CAP,CER 102J-CH1H-CP
AUDIO-P.W.Board			C3205	08-19311Z01	CAP,CER 104KX7R1H-CP
AUDIO-P.W.Board			C3206	08-19311Z01	CAP,CER 104KX7R1H-CP
AUDIO-P.W.Board			C3210	08S65676Y10	CAP,CER 106KX7R1C-CP
AUDIO-P.W.Board			C3221	08S65669Y03	CAP,CER 224KX7R1H-CP
AUDIO-P.W.Board			C3222	08-19311Z03	CAP,CER 103KX7R1H-CP
AUDIO-P.W.Board			C3223	08S65669Y03	CAP,CER 224KX7R1H-CP
AUDIO-P.W.Board			C3224	08S65669Y03	CAP,CER 224KX7R1H-CP
AUDIO-P.W.Board			C3225	08S65669Y03	CAP,CER 224KX7R1H-CP
AUDIO-P.W.Board			C3226	08S65669Y03	CAP,CER 224KX7R1H-CP
AUDIO-P.W.Board			C3227	08S65669Y03	CAP,CER 224KX7R1H-CP
AUDIO-P.W.Board			C3230	08S35374W07	CAP,CER 334K-B1C -CP
AUDIO-P.W.Board			C3231	08S65669Y03	CAP,CER 224KX7R1H-CP

P.W.Board	MIS	MODEL	Ref.	Parts No.	Parts Name
AUDIO-P.W.Board			C3232	08S65669Y03	CAP,CER 224KX7R1H-CP
AUDIO-P.W.Board			C3233	08-15113Z01	CAP,CER 225KX7R1C-CP
AUDIO-P.W.Board			C3234	08-23325Z03	CAP,CER 222KX7R1H-CP
AUDIO-P.W.Board			C3235	08-23325Z03	CAP,CER 222KX7R1H-CP
AUDIO-P.W.Board			C3236	08S45231Y15	CAP,CER 15RJ-CH1H-CP
AUDIO-P.W.Board			C3237	08-15113Z01	CAP,CER 225KX7R1C-CP
AUDIO-P.W.Board			C3238	08S35374W07	CAP,CER 334K-B1C -CP
AUDIO-P.W.Board			C3239	08-23326Z08	CAP,CER 473KX7R1H-CP
AUDIO-P.W.Board			C3240	08S45231Y15	CAP,CER 15RJ-CH1H-CP
AUDIO-P.W.Board			C3350	08-19311Z01	CAP,CER 104KX7R1H-CP
AUDIO-P.W.Board			C3351	08-19311Z01	CAP,CER 104KX7R1H-CP
AUDIO-P.W.Board			C3352	08S45232Y21	CAP,CER 104K-B1A-CP
AUDIO-P.W.Board			C3353	08S45232Y21	CAP,CER 104K-B1A-CP
AUDIO-P.W.Board			C3354	08S45232Y21	CAP,CER 104K-B1A-CP
AUDIO-P.W.Board			C3400	08S65669Y03	CAP,CER 224KX7R1H-CP
AUDIO-P.W.Board			C3401	08S65669Y03	CAP,CER 224KX7R1H-CP
AUDIO-P.W.Board			C3402	08S65669Y03	CAP,CER 224KX7R1H-CP
AUDIO-P.W.Board			C3403	08S65669Y03	CAP,CER 224KX7R1H-CP
AUDIO-P.W.Board			C3404	08-19311Z03	CAP,CER 103KX7R1H-CP
AUDIO-P.W.Board			C3405	08-19311Z01	CAP,CER 104KX7R1H-CP
AUDIO-P.W.Board			C3406	08-19311Z01	CAP,CER 104KX7R1H-CP
AUDIO-P.W.Board			C3407	08-23326Z05	CAP,CER 105KX7R1A-CP
AUDIO-P.W.Board			C3408	08S65669Y03	CAP,CER 224KX7R1H-CP
AUDIO-P.W.Board			C3410	08S65677Y06	CAP,CER 226MX7R1C-CP
AUDIO-P.W.Board			C3411	08S65677Y06	CAP,CER 226MX7R1C-CP
AUDIO-P.W.Board			C3412	08S65677Y06	CAP,CER 226MX7R1C-CP

P.W.Board	MIS	MODEL	Ref.	Parts No.	Parts Name
AUDIO-P.W.Board			C3430	08S65676Y09	CAP,CER 475KX7R1H-CP
AUDIO-P.W.Board			C3431	08S65669Y03	CAP,CER 224KX7R1H-CP
AUDIO-P.W.Board			C3432	08S65669Y03	CAP,CER 224KX7R1H-CP
AUDIO-P.W.Board			C3440	08S65669Y03	CAP,CER 224KX7R1H-CP
AUDIO-P.W.Board			C3441	08-14627Z01	CAP,CER 107MX5R0J-CP
AUDIO-P.W.Board			C3442	08S65669Y03	CAP,CER 224KX7R1H-CP
AUDIO-P.W.Board			C3460	08S65669Y03	CAP,CER 224KX7R1H-CP
AUDIO-P.W.Board			C3461	08S65669Y05	CAP,CER 106KX7R0J-CP
AUDIO-P.W.Board			C3462	08-15113Z01	CAP,CER 225KX7R1C-CP
AUDIO-P.W.Board			C3464	08S65669Y03	CAP,CER 224KX7R1H-CP
AUDIO-P.W.Board			C3470	08S65669Y03	CAP,CER 224KX7R1H-CP
AUDIO-P.W.Board			C3471	08S65669Y03	CAP,CER 224KX7R1H-CP
AUDIO-P.W.Board			C3480	08S65669Y03	CAP,CER 224KX7R1H-CP
AUDIO-P.W.Board			C3481	08S65670Y06	CAP,CER 226KX5R1A-CP
AUDIO-P.W.Board			C3482	08S65669Y03	CAP,CER 224KX7R1H-CP
AUDIO-P.W.Board			C3490	08S65676Y02	CAP,CER 475KX7R1A-CP
AUDIO-P.W.Board			C3492	08S45232Y21	CAP,CER 104K-B1A-CP
AUDIO-P.W.Board			C3493	08S45232Y21	CAP,CER 104K-B1A-CP
AUDIO-P.W.Board			C3494	08S45232Y21	CAP,CER 104K-B1A-CP
AUDIO-P.W.Board			C3495	08S45232Y21	CAP,CER 104K-B1A-CP
AUDIO-P.W.Board			C3496	08-15113Z03	CAP,CER 475KX7R1C-CP
AUDIO-P.W.Board			C3498	08-23326Z05	CAP,CER 105KX7R1A-CP
AUDIO-P.W.Board			C3499	08-23326Z05	CAP,CER 105KX7R1A-CP
AUDIO-P.W.Board			C3502	08-15113Z01	CAP,CER 225KX7R1C-CP
AUDIO-P.W.Board			C3503	08S65669Y03	CAP,CER 224KX7R1H-CP
AUDIO-P.W.Board			C3504	08S65669Y03	CAP,CER 224KX7R1H-CP

P.W.Board	MIS	MODEL	Ref.	Parts No.	Parts Name
AUDIO-P.W.Board			C3505	08S65669Y03	CAP,CER 224KX7R1H-CP
AUDIO-P.W.Board			C3506	08S65676Y10	CAP,CER 106KX7R1C-CP
AUDIO-P.W.Board			C3510	08-23325Z07	CAP,CER 103KX7R1C-CP
AUDIO-P.W.Board			C3511	08S65669Y03	CAP,CER 224KX7R1H-CP
AUDIO-P.W.Board			C3512	08S65669Y03	CAP,CER 224KX7R1H-CP
AUDIO-P.W.Board			C3551	08S45232Y21	CAP,CER 104K-B1A-CP
AUDIO-P.W.Board			C3552	08S45232Y21	CAP,CER 104K-B1A-CP
AUDIO-P.W.Board			C3602	08-23325Z04	CAP,CER 332KX7R1H-CP
AUDIO-P.W.Board			C3603	08S65669Y03	CAP,CER 224KX7R1H-CP
AUDIO-P.W.Board			C3605	08S65670Y06	CAP,CER 226KX5R1A-CP
AUDIO-P.W.Board			C3607	08S45231Y25	CAP,CER 101J-CH1H-CP
AUDIO-P.W.Board			C3608	08S65676Y09	CAP,CER 475KX7R1H-CP
AUDIO-P.W.Board			C3612	08S65669Y03	CAP,CER 224KX7R1H-CP
AUDIO-P.W.Board			CB2000	09-14451Z06	FFC,502790-3091 -ED
AUDIO-P.W.Board			CB3100	09T35473Y16	WTB,F169B001-16 -DB
AUDIO-P.W.Board			CB3120	09-25106Z01	WTB,S10B-PUDSS-1 -DB
AUDIO-P.W.Board			CB3130	09-25106Z02	WTB,S12B-PUDSS-1 -DB
AUDIO-P.W.Board			CB3150	09-16961Z09	WTB,A1257WV0-10PS-ED
AUDIO-P.W.Board			CB3490	09T85454W03	WTB,53398-0371 -E6
AUDIO-P.W.Board			CH3300	09-29653Z01	BTB,FX23-100S-0.5S-T
AUDIO-P.W.Board			D2460	48-17624Z01	DIO,DA3J102D0L -CP
AUDIO-P.W.Board			D2461	48-17624Z01	DIO,DA3J102D0L -CP
AUDIO-P.W.Board			D2462	48-17624Z01	DIO,DA3J102D0L -CP
AUDIO-P.W.Board			D2650	48-05965Z01	DIO,1SS361-L -CP
AUDIO-P.W.Board			D2901	48-19711Z01	DIO,BAV99W -CP
AUDIO-P.W.Board			D3200	48-05965Z01	DIO,1SS361-L -CP

P.W.Board	MIS	MODEL	Ref.	Parts No.	Parts Name
AUDIO-P.W.Board			D3201	48-05164Z01	DIO,1SS352-TPH3 -CP
AUDIO-P.W.Board			D3202	48-05965Z01	DIO,1SS361-L -CP
AUDIO-P.W.Board			D3204	48-05965Z01	DIO,1SS361-L -CP
AUDIO-P.W.Board			D3205	48-05164Z01	DIO,1SS352-TPH3 -CP
AUDIO-P.W.Board			D3400	48T75527Y01	DIO,1SR154-400 -E1
AUDIO-P.W.Board			E2404	23-31100Z12	CAP,MAK 101-1C -E6
AUDIO-P.W.Board			E2405	23-31100Z07	CAP,MAK 101-1A -E6
AUDIO-P.W.Board			E2420	23-31100Z10	CAP,MAK 22R-1C -E3
AUDIO-P.W.Board			E2421	23-31100Z10	CAP,MAK 22R-1C -E3
AUDIO-P.W.Board			E2440	23S75244Y19	CAP,ELY 101-1C -E6
AUDIO-P.W.Board			E2441	23S75244Y17	CAP,ELY 22R-1C -E2
AUDIO-P.W.Board			E2442	23S75244Y17	CAP,ELY 22R-1C -E2
AUDIO-P.W.Board			E2460	23-31100Z26	CAP,MAK 3R3-1H -E2
AUDIO-P.W.Board			E2461	23-31100Z26	CAP,MAK 3R3-1H -E2
AUDIO-P.W.Board			E2600	23-31100Z17	CAP,MAK 10R-1E -E3
AUDIO-P.W.Board			E2601	23-31100Z17	CAP,MAK 10R-1E -E3
AUDIO-P.W.Board			E2650	23S75244Y19	CAP,ELY 101-1C -E6
AUDIO-P.W.Board			E3100	23-19876Z04	CAP,CST 472-1E +
AUDIO-P.W.Board			E3200	23-31100Z17	CAP,MAK 10R-1E -E3
AUDIO-P.W.Board			E3300	23S75244Y31	CAP,ELY 471-1E -EA
AUDIO-P.W.Board			E3301	23S75244Y22	CAP,ELY 471-1C -EA
AUDIO-P.W.Board			E3400	23S75244Y19	CAP,ELY 101-1C -E6
AUDIO-P.W.Board			E3404	23S75244Y24	CAP,ELY 10R-1E -E2
AUDIO-P.W.Board			E3405	23S75244Y25	CAP,ELY 22R-1E -E3
AUDIO-P.W.Board			E3406	23S75244Y14	CAP,ELY 681-1A -EA
AUDIO-P.W.Board			E3430	23S75244Y25	CAP,ELY 22R-1E -E3

P.W.Board	MIS	MODEL	Ref.	Parts No.	Parts Name
AUDIO-P.W.Board			E3440	23S75244Y26	CAP,ELY 33R-1E -E3
AUDIO-P.W.Board			E3470	23-31100Z06	CAP,MAK 33R-1A -E3
AUDIO-P.W.Board			E3471	23-31100Z11	CAP,MAK 47R-1C -E6
AUDIO-P.W.Board			E3480	23S75244Y01	CAP,ELY 22R-0J -E2
AUDIO-P.W.Board			E3510	23S75244Y01	CAP,ELY 22R-0J -E2
AUDIO-P.W.Board			E3511	23-31100Z06	CAP,MAK 33R-1A -E3
AUDIO-P.W.Board			E3600	23S75244Y05	CAP,ELY 331-0J -E6
AUDIO-P.W.Board			E3601	23S75244Y25	CAP,ELY 22R-1E -E3
AUDIO-P.W.Board			IC2000	83-39430Z36	US_NL00031A_BU_IC2000
AUDIO-P.W.Board			IC2000	51-23912Z01	MTP,D70F3479AGJAQ-QT
AUDIO-P.W.Board			IC2001	51T15185Y03	TC7SH08FU,LJ -CP
AUDIO-P.W.Board			IC2180	51-24805Z01	BR24T16F-WGE2 -SE2
AUDIO-P.W.Board			IC2190	51-04315Z22	BU4229G-TR -CP
AUDIO-P.W.Board			IC2200	51-30382Z02	SAF7754HV/N205 -QT
AUDIO-P.W.Board			IC2202	83-38652Z38	V1.100_LIMO_DiRaNA3
AUDIO-P.W.Board			IC2202	51-18520Z01	MX25L8035EM21-10G-ST
AUDIO-P.W.Board			IC2203	51-29083Z01	SN74AHCU04QPWRG4-SE2
AUDIO-P.W.Board			IC2400	51-16740Z02	BD34601FS-ME2 -SE6
AUDIO-P.W.Board			IC2401	51-05314Z01	BA4560RFVM-TR -SE1
AUDIO-P.W.Board			IC2420	51T25576W07	NJM4580V-TE2 -SE2
AUDIO-P.W.Board			IC2421	51T25576W07	NJM4580V-TE2 -SE2
AUDIO-P.W.Board			IC2422	51T25576W07	NJM4580V-TE2 -SE2
AUDIO-P.W.Board			IC2440	51-20907Z01	TPS60402QDBVRQ1 -CP
AUDIO-P.W.Board			IC2441	51-16845Z04	TAR5S50U-TE85L -CP
AUDIO-P.W.Board			IC2500	51-32736Z01	AK7738VQ -QEA
AUDIO-P.W.Board			IC2600	51-30375Z01	STPA003OD-4WX -ZS

P.W.Board	MIS	MODEL	Ref.	Parts No.	Parts Name
AUDIO-P.W.Board			IC2850	51T25141Y03	TC7SHU04FU,LJ -CP
AUDIO-P.W.Board			IC2851	51-27637Z01	SI4749-C10-AMR -LE2
AUDIO-P.W.Board			IC3000	51-29945Z01	SAF3600EL/V1040A-BEA
AUDIO-P.W.Board			IC3001	83-38652Z40	VC0004.004R1_LIMOUS_Saturn_WB
AUDIO-P.W.Board			IC3001	51-38431Z01	W25Q80DVSNAG -ST
AUDIO-P.W.Board			IC3150	51T15194Y03	74VHCT08AFT-EL -SE2
AUDIO-P.W.Board			IC3200	51-20765Z31	S-1009N37H-M5T2U -CP
AUDIO-P.W.Board			IC3206	51-02032Z02	TC7SET02FU,LJ -CP
AUDIO-P.W.Board			IC3207	51T15614Y01	TC74HC4051AFT-EL-SE5
AUDIO-P.W.Board			IC3208	51T15614Y01	TC74HC4051AFT-EL-SE5
AUDIO-P.W.Board			IC3209	51T35360Y01	TC7WH08FU-L -SE1
AUDIO-P.W.Board			IC3210	51T15194Y03	74VHCT08AFT-EL -SE2
AUDIO-P.W.Board			IC3212	51-20560Z02	TC74VHC4051AFK(B-SE2
AUDIO-P.W.Board			IC3213	51T15647Y01	NJM4558V-TE2 -SE2
AUDIO-P.W.Board			IC3220	51-05314Z01	BA4560RFVM-TR -SE1
AUDIO-P.W.Board			IC3400	51-13711Z02	TB2920AHQ -ZS
AUDIO-P.W.Board			IC3430	51-28614Z01	BD00FC0EEFJ-ME2 -SE2
AUDIO-P.W.Board			IC3440	51-23593Z02	BD00IC0WEFJ-ME2 -SE2
AUDIO-P.W.Board			IC3460	51-23593Z02	BD00IC0WEFJ-ME2 -SE2
AUDIO-P.W.Board			IC3470	51-23593Z05	BD00IA5EEFJ-ME2 -SE2
AUDIO-P.W.Board			IC3480	51-23593Z02	BD00IC0WEFJ-ME2 -SE2
AUDIO-P.W.Board			IC3500	51-07902Z01	NJM2871BF05-TE1 -CP
AUDIO-P.W.Board			IC3510	51-07902Z02	NJM2871BF33-TE1 -CP
AUDIO-P.W.Board			IC3601	51-28779Z02	BD90640EFJ-CE2 -SE2
AUDIO-P.W.Board			L2200	24-24463Z01	FBI,BLM15HD601SH1-CP
AUDIO-P.W.Board			L2201	24-24463Z01	FBI,BLM15HD601SH1-CP

P.W.Board	MIS	MODEL	Ref.	Parts No.	Parts Name
AUDIO-P.W.Board			L2202	24-24463Z01	FBI,BLM15HD601SH1-CP
AUDIO-P.W.Board			L2203	24-17733Z06	IND,NLCV32T 47RK -CP
AUDIO-P.W.Board			L2204	24-17733Z06	IND,NLCV32T 47RK -CP
AUDIO-P.W.Board			L2205	24-24463Z01	FBI,BLM15HD601SH1-CP
AUDIO-P.W.Board			L2206	24-24463Z01	FBI,BLM15HD601SH1-CP
AUDIO-P.W.Board			L2210	24-24463Z01	FBI,BLM15HD601SH1-CP
AUDIO-P.W.Board			L2440	24T95202W25	IND,CDRH64B 102M -E6
AUDIO-P.W.Board			L2441	24T95202W25	IND,CDRH64B 102M -E6
AUDIO-P.W.Board			L2500	24-06212Z05	FBI,BLM15BB121SH1-CP
AUDIO-P.W.Board			L2501	24-06212Z05	FBI,BLM15BB121SH1-CP
AUDIO-P.W.Board			L2502	24-06212Z05	FBI,BLM15BB121SH1-CP
AUDIO-P.W.Board			L2850	24-06212Z01	FBI,BLM15AG601SH1-CP
AUDIO-P.W.Board			L2851	24-09036Z10	IND,LQW18AN R18J -CP
AUDIO-P.W.Board			L2852	24-06212Z01	FBI,BLM15AG601SH1-CP
AUDIO-P.W.Board			L2902	24-30185Z23	IND,LQW2BAS R22J -CP
AUDIO-P.W.Board			L2904	24T25164Y12	IND,FSLM2520 R82J-CP
AUDIO-P.W.Board			L2905	24-09036Z11	IND,LQW18AN R27J -CP
AUDIO-P.W.Board			L2906	24T25164Y19	IND,FSLM2520 3R3J-CP
AUDIO-P.W.Board			L2950	24T25164Y21	IND,FSLM2520 4R7J-CP
AUDIO-P.W.Board			L2951	24T25164Y05	IND,FSLM2520 R22J-CP
AUDIO-P.W.Board			L2952	24T15278Y03	IND,BM-7A -DB
AUDIO-P.W.Board			L2953	24T95456W27	FBI,BLM18PG181SH1-CP
AUDIO-P.W.Board			L3150	24-06212Z08	FBI,BLM15BD102SH1-CP
AUDIO-P.W.Board			L3490	24T95456W27	FBI,BLM18PG181SH1-CP
AUDIO-P.W.Board			L3492	24T95456W27	FBI,BLM18PG181SH1-CP
AUDIO-P.W.Board			L3493	24T95456W27	FBI,BLM18PG181SH1-CP

P.W.Board	MIS	MODEL	Ref.	Parts No.	Parts Name
AUDIO-P.W.Board			L3494	24T95456W27	FBI,BLM18PG181SH1-CP
AUDIO-P.W.Board			L3495	24-28869Z04	FBI,BKP1608HS121 -CP
AUDIO-P.W.Board			L3601	24-17581Z02	IND,NRS5020T 1R5N-E2
AUDIO-P.W.Board			L3602	24-08610Z03	IND,DS106C2 10RM -EA
AUDIO-P.W.Board			PS3101	48-16589Z01	POLY,SW SMDC075F -E2
AUDIO-P.W.Board			PS3150	48-16589Z03	POLY,SW SMDC150F -E2
AUDIO-P.W.Board			Q2460	48T75180Y04	TR,IMH23-T110 -CP
AUDIO-P.W.Board			Q2461	48T75180Y04	TR,IMH23-T110 -CP
AUDIO-P.W.Board			Q2462	48T75180Y04	TR,IMH23-T110 -CP
AUDIO-P.W.Board			Q2650	48T25737Y02	TR,UMD3N-TR -CP
AUDIO-P.W.Board			Q2651	48-20093Z01	TR,DMC561010R -CP
AUDIO-P.W.Board			Q2652	48T25737Y01	TR,UMD2N-TR -CP
AUDIO-P.W.Board			Q2950	48-29875Z01	TR,2SC5084-O -CP
AUDIO-P.W.Board			Q3200	48-12999Z01	TR,DTA114EUBTL -CP
AUDIO-P.W.Board			Q3202	48-13000Z05	TR,DTC124EUBTL -CP
AUDIO-P.W.Board			Q3203	48T25737Y01	TR,UMD2N-TR -CP
AUDIO-P.W.Board			Q3204	48-13000Z01	TR,DTC114EUBTL -CP
AUDIO-P.W.Board			Q3205	48T25737Y01	TR,UMD2N-TR -CP
AUDIO-P.W.Board			Q3207	48-13000Z01	TR,DTC114EUBTL -CP
AUDIO-P.W.Board			Q3208	48-18270Z01	TR,2SA1576UBTL -CP
AUDIO-P.W.Board			Q3209	48T25737Y02	TR,UMD3N-TR -CP
AUDIO-P.W.Board			R2001	06S15616Y23	RES,RK JUMPER1/16-CP
AUDIO-P.W.Board			R2002	06S15616Y43	RES,RK 106J 1/16 -CP
AUDIO-P.W.Board			R2003	06S15616Y22	RES,RK 105J 1/16 -CP
AUDIO-P.W.Board			R2005	06S15615Y25	RES,RK 101J 1/16 -CP
AUDIO-P.W.Board			R2006	06S15615Y25	RES,RK 101J 1/16 -CP

P.W.Board	MIS	MODEL	Ref.	Parts No.	Parts Name
AUDIO-P.W.Board			R2007	06S15615Y25	RES,RK 101J 1/16 -CP
AUDIO-P.W.Board			R2010	06S65415Y41	RES,RK 223F 1/16 -CP
AUDIO-P.W.Board			R2011	06S65415Y29	RES,RK 222F 1/16 -CP
AUDIO-P.W.Board			R2012	06S65415Y29	RES,RK 222F 1/16 -CP
AUDIO-P.W.Board			R2014	06S15615Y25	RES,RK 101J 1/16 -CP
AUDIO-P.W.Board			R2015	06S15616Y23	RES,RK JUMPER1/16-CP
AUDIO-P.W.Board			R2016	06S65415Y37	RES,RK 103F 1/16 -CP
AUDIO-P.W.Board			R2017	06S65415Y37	RES,RK 103F 1/16 -CP
AUDIO-P.W.Board			R2019	06S65415Y41	RES,RK 223F 1/16 -CP
AUDIO-P.W.Board			R2023	06S65415Y37	RES,RK 103F 1/16 -CP
AUDIO-P.W.Board			R2024	06S15616Y23	RES,RK JUMPER1/16-CP
AUDIO-P.W.Board			R2025	06S65415Y41	RES,RK 223F 1/16 -CP
AUDIO-P.W.Board			R2026	06S65415Y41	RES,RK 223F 1/16 -CP
AUDIO-P.W.Board			R2027	06S65415Y41	RES,RK 223F 1/16 -CP
AUDIO-P.W.Board			R2028	06S65415Y41	RES,RK 223F 1/16 -CP
AUDIO-P.W.Board			R2029	06S15615Y25	RES,RK 101J 1/16 -CP
AUDIO-P.W.Board			R2030	06S65415Y37	RES,RK 103F 1/16 -CP
AUDIO-P.W.Board			R2032	06S65415Y37	RES,RK 103F 1/16 -CP
AUDIO-P.W.Board			R2033	06S65415Y41	RES,RK 223F 1/16 -CP
AUDIO-P.W.Board			R2034	06S65415Y41	RES,RK 223F 1/16 -CP
AUDIO-P.W.Board			R2035	06S15615Y25	RES,RK 101J 1/16 -CP
AUDIO-P.W.Board			R2036	06S65415Y41	RES,RK 223F 1/16 -CP
AUDIO-P.W.Board			R2039	06S65415Y41	RES,RK 223F 1/16 -CP
AUDIO-P.W.Board			R2040	06S65415Y41	RES,RK 223F 1/16 -CP
AUDIO-P.W.Board			R2041	06S15615Y25	RES,RK 101J 1/16 -CP
AUDIO-P.W.Board			R2042	06S65415Y37	RES,RK 103F 1/16 -CP

P.W.Board	MIS	MODEL	Ref.	Parts No.	Parts Name
AUDIO-P.W.Board			R2043	06S65415Y37	RES,RK 103F 1/16 -CP
AUDIO-P.W.Board			R2044	06S65415Y37	RES,RK 103F 1/16 -CP
AUDIO-P.W.Board			R2045	06S65415Y37	RES,RK 103F 1/16 -CP
AUDIO-P.W.Board			R2046	06S65415Y29	RES,RK 222F 1/16 -CP
AUDIO-P.W.Board			R2047	06S65415Y37	RES,RK 103F 1/16 -CP
AUDIO-P.W.Board			R2048	06S65415Y37	RES,RK 103F 1/16 -CP
AUDIO-P.W.Board			R2055	06S15616Y23	RES,RK JUMPER1/16-CP
AUDIO-P.W.Board			R2060	06S15615Y25	RES,RK 101J 1/16 -CP
AUDIO-P.W.Board			R2061	06S15615Y49	RES,RK 102J 1/16 -CP
AUDIO-P.W.Board			R2062	06S45674W33	RES,RK 101J 1/10 -CP
AUDIO-P.W.Board			R2063	06S15615Y25	RES,RK 101J 1/16 -CP
AUDIO-P.W.Board			R2064	06S15615Y41	RES,RK 471J 1/16 -CP
AUDIO-P.W.Board			R2070	06S15615Y25	RES,RK 101J 1/16 -CP
AUDIO-P.W.Board			R2071	06S15615Y25	RES,RK 101J 1/16 -CP
AUDIO-P.W.Board			R2072	06S15615Y25	RES,RK 101J 1/16 -CP
AUDIO-P.W.Board			R2074	06S15615Y25	RES,RK 101J 1/16 -CP
AUDIO-P.W.Board			R2076	06S15615Y25	RES,RK 101J 1/16 -CP
AUDIO-P.W.Board			R2077	06S15615Y25	RES,RK 101J 1/16 -CP
AUDIO-P.W.Board			R2083	06S15615Y25	RES,RK 101J 1/16 -CP
AUDIO-P.W.Board			R2092	06S15615Y25	RES,RK 101J 1/16 -CP
AUDIO-P.W.Board			R2093	06S15615Y25	RES,RK 101J 1/16 -CP
AUDIO-P.W.Board			R2102	06S15616Y23	RES,RK JUMPER1/16-CP
AUDIO-P.W.Board			R2103	06S15615Y49	RES,RK 102J 1/16 -CP
AUDIO-P.W.Board			R2104	06S15615Y49	RES,RK 102J 1/16 -CP
AUDIO-P.W.Board			R2105	06S15615Y49	RES,RK 102J 1/16 -CP
AUDIO-P.W.Board			R2108	06S15616Y23	RES,RK JUMPER1/16-CP

P.W.Board	MIS	MODEL	Ref.	Parts No.	Parts Name
AUDIO-P.W.Board			R2109	06S15616Y23	RES,RK JUMPER1/16-CP
AUDIO-P.W.Board			R2110	06S15616Y23	RES,RK JUMPER1/16-CP
AUDIO-P.W.Board			R2111	06S15616Y23	RES,RK JUMPER1/16-CP
AUDIO-P.W.Board			R2180	06S65415Y33	RES,RK 472F 1/16 -CP
AUDIO-P.W.Board			R2181	06S65415Y33	RES,RK 472F 1/16 -CP
AUDIO-P.W.Board			R2190	06S45674W81	RES,RK 103J 1/10 -CP
AUDIO-P.W.Board			R2191	06S45674W57	RES,RK 102J 1/10 -CP
AUDIO-P.W.Board			R2192	06S15615Y45	RES,RK 681J 1/16 -CP
AUDIO-P.W.Board			R2204	06S65415Y37	RES,RK 103F 1/16 -CP
AUDIO-P.W.Board			R2207	06S65415Y37	RES,RK 103F 1/16 -CP
AUDIO-P.W.Board			R2213	06S65415Y35	RES,RK 682F 1/16 -CP
AUDIO-P.W.Board			R2214	06S65415Y35	RES,RK 682F 1/16 -CP
AUDIO-P.W.Board			R2215	06S15616Y23	RES,RK JUMPER1/16-CP
AUDIO-P.W.Board			R2216	06S15616Y23	RES,RK JUMPER1/16-CP
AUDIO-P.W.Board			R2217	06S15616Y23	RES,RK JUMPER1/16-CP
AUDIO-P.W.Board			R2218	06S15616Y23	RES,RK JUMPER1/16-CP
AUDIO-P.W.Board			R2221	06S15616Y23	RES,RK JUMPER1/16-CP
AUDIO-P.W.Board			R2222	06S15616Y23	RES,RK JUMPER1/16-CP
AUDIO-P.W.Board			R2226	06S15616Y23	RES,RK JUMPER1/16-CP
AUDIO-P.W.Board			R2227	06S15615Y25	RES,RK 101J 1/16 -CP
AUDIO-P.W.Board			R2228	06S15616Y23	RES,RK JUMPER1/16-CP
AUDIO-P.W.Board			R2229	06S15616Y23	RES,RK JUMPER1/16-CP
AUDIO-P.W.Board			R2230	06S15616Y23	RES,RK JUMPER1/16-CP
AUDIO-P.W.Board			R2231	06S15616Y23	RES,RK JUMPER1/16-CP
AUDIO-P.W.Board			R2232	06S15616Y23	RES,RK JUMPER1/16-CP
AUDIO-P.W.Board			R2233	06S15616Y23	RES,RK JUMPER1/16-CP

P.W.Board	MIS	MODEL	Ref.	Parts No.	Parts Name
AUDIO-P.W.Board			R2234	06S15616Y23	RES,RK JUMPER1/16-CP
AUDIO-P.W.Board			R2249	06S65415Y37	RES,RK 103F 1/16 -CP
AUDIO-P.W.Board			R2250	06S15616Y23	RES,RK JUMPER1/16-CP
AUDIO-P.W.Board			R2251	06S15616Y23	RES,RK JUMPER1/16-CP
AUDIO-P.W.Board			R2253	06S15615Y09	RES,RK 22RJ 1/16 -CP
AUDIO-P.W.Board			R2254	06S15615Y09	RES,RK 22RJ 1/16 -CP
AUDIO-P.W.Board			R2255	06S15616Y23	RES,RK JUMPER1/16-CP
AUDIO-P.W.Board			R2256	06S15615Y09	RES,RK 22RJ 1/16 -CP
AUDIO-P.W.Board			R2258	06S65415Y37	RES,RK 103F 1/16 -CP
AUDIO-P.W.Board			R2260	06S15616Y23	RES,RK JUMPER1/16-CP
AUDIO-P.W.Board			R2262	06S15616Y23	RES,RK JUMPER1/16-CP
AUDIO-P.W.Board			R2263	06S15616Y23	RES,RK JUMPER1/16-CP
AUDIO-P.W.Board			R2268	06S65415Y35	RES,RK 682F 1/16 -CP
AUDIO-P.W.Board			R2270	06S15615Y25	RES,RK 101J 1/16 -CP
AUDIO-P.W.Board			R2400	06S65415Y34	RES,RK 562F 1/16 -CP
AUDIO-P.W.Board			R2401	06S65415Y47	RES,RK 683F 1/16 -CP
AUDIO-P.W.Board			R2402	06S15615Y57	RES,RK 222J 1/16 -CP
AUDIO-P.W.Board			R2403	06S15593Y81	RES,RK 223F 1/10 -CP
AUDIO-P.W.Board			R2404	06S65415Y35	RES,RK 682F 1/16 -CP
AUDIO-P.W.Board			R2405	06S65415Y48	RES,RK 823F 1/16 -CP
AUDIO-P.W.Board			R2406	06S65415Y35	RES,RK 682F 1/16 -CP
AUDIO-P.W.Board			R2407	06S65415Y48	RES,RK 823F 1/16 -CP
AUDIO-P.W.Board			R2408	06S15593Y81	RES,RK 223F 1/10 -CP
AUDIO-P.W.Board			R2409	06S15616Y23	RES,RK JUMPER1/16-CP
AUDIO-P.W.Board			R2410	06S15615Y77	RES,RK 153J 1/16 -CP
AUDIO-P.W.Board			R2411	06S15593Y81	RES,RK 223F 1/10 -CP

P.W.Board	MIS	MODEL	Ref.	Parts No.	Parts Name
AUDIO-P.W.Board			R2412	06S15593Y81	RES,RK 223F 1/10 -CP
AUDIO-P.W.Board			R2413	06S15616Y23	RES,RK JUMPER1/16-CP
AUDIO-P.W.Board			R2414	06S15593Y69	RES,RK 682F 1/10 -CP
AUDIO-P.W.Board			R2415	06S15593Y81	RES,RK 223F 1/10 -CP
AUDIO-P.W.Board			R2416	06S15593Y81	RES,RK 223F 1/10 -CP
AUDIO-P.W.Board			R2417	06S15593Y81	RES,RK 223F 1/10 -CP
AUDIO-P.W.Board			R2418	06S15593Y69	RES,RK 682F 1/10 -CP
AUDIO-P.W.Board			R2419	06S15593Y81	RES,RK 223F 1/10 -CP
AUDIO-P.W.Board			R2420	06S65415Y49	RES,RK 104F 1/16 -CP
AUDIO-P.W.Board			R2421	06S15593Y81	RES,RK 223F 1/10 -CP
AUDIO-P.W.Board			R2422	06S15593Y81	RES,RK 223F 1/10 -CP
AUDIO-P.W.Board			R2423	06S65415Y49	RES,RK 104F 1/16 -CP
AUDIO-P.W.Board			R2424	06S15593Y81	RES,RK 223F 1/10 -CP
AUDIO-P.W.Board			R2425	06S15593Y81	RES,RK 223F 1/10 -CP
AUDIO-P.W.Board			R2426	06S65415Y49	RES,RK 104F 1/16 -CP
AUDIO-P.W.Board			R2427	06S15593Y81	RES,RK 223F 1/10 -CP
AUDIO-P.W.Board			R2428	06S15593Y81	RES,RK 223F 1/10 -CP
AUDIO-P.W.Board			R2429	06S65415Y49	RES,RK 104F 1/16 -CP
AUDIO-P.W.Board			R2430	06S65415Y49	RES,RK 104F 1/16 -CP
AUDIO-P.W.Board			R2431	06S15593Y81	RES,RK 223F 1/10 -CP
AUDIO-P.W.Board			R2432	06S15593Y81	RES,RK 223F 1/10 -CP
AUDIO-P.W.Board			R2433	06S15593Y81	RES,RK 223F 1/10 -CP
AUDIO-P.W.Board			R2434	06S15593Y81	RES,RK 223F 1/10 -CP
AUDIO-P.W.Board			R2435	06S65415Y49	RES,RK 104F 1/16 -CP
AUDIO-P.W.Board			R2436	06S15593Y81	RES,RK 223F 1/10 -CP
AUDIO-P.W.Board			R2437	06S15593Y81	RES,RK 223F 1/10 -CP

P.W.Board	MIS	MODEL	Ref.	Parts No.	Parts Name
AUDIO-P.W.Board			R2438	06S15593Y81	RES,RK 223F 1/10 -CP
AUDIO-P.W.Board			R2439	06S15615Y61	RES,RK 332J 1/16 -CP
AUDIO-P.W.Board			R2451	06S15593Y81	RES,RK 223F 1/10 -CP
AUDIO-P.W.Board			R2453	06S15593Y81	RES,RK 223F 1/10 -CP
AUDIO-P.W.Board			R2454	06S15593Y81	RES,RK 223F 1/10 -CP
AUDIO-P.W.Board			R2457	06S15593Y81	RES,RK 223F 1/10 -CP
AUDIO-P.W.Board			R2459	06S15593Y81	RES,RK 223F 1/10 -CP
AUDIO-P.W.Board			R2460	06S15615Y94	RES,RK 753J 1/16 -CP
AUDIO-P.W.Board			R2461	06S15615Y94	RES,RK 753J 1/16 -CP
AUDIO-P.W.Board			R2462	06S15615Y94	RES,RK 753J 1/16 -CP
AUDIO-P.W.Board			R2463	06S15615Y94	RES,RK 753J 1/16 -CP
AUDIO-P.W.Board			R2464	06S15615Y94	RES,RK 753J 1/16 -CP
AUDIO-P.W.Board			R2465	06S15615Y94	RES,RK 753J 1/16 -CP
AUDIO-P.W.Board			R2466	06S70072F29	RES,CP .101-J-1/4-CP
AUDIO-P.W.Board			R2467	06S70072F29	RES,CP .101-J-1/4-CP
AUDIO-P.W.Board			R2468	06S70072F29	RES,CP .101-J-1/4-CP
AUDIO-P.W.Board			R2469	06S70072F29	RES,CP .101-J-1/4-CP
AUDIO-P.W.Board			R2470	06S70072F29	RES,CP .101-J-1/4-CP
AUDIO-P.W.Board			R2471	06S70072F29	RES,CP .101-J-1/4-CP
AUDIO-P.W.Board			R2472	06S70072F37	RES,CP .221-J-1/4-CP
AUDIO-P.W.Board			R2473	06S70072F37	RES,CP .221-J-1/4-CP
AUDIO-P.W.Board			R2474	06S70072F37	RES,CP .221-J-1/4-CP
AUDIO-P.W.Board			R2475	06S70072F37	RES,CP .221-J-1/4-CP
AUDIO-P.W.Board			R2476	06S70072F37	RES,CP .221-J-1/4-CP
AUDIO-P.W.Board			R2477	06S70072F37	RES,CP .221-J-1/4-CP
AUDIO-P.W.Board			R2500	06S15615Y41	RES,RK 471J 1/16 -CP

P.W.Board	MIS	MODEL	Ref.	Parts No.	Parts Name
AUDIO-P.W.Board			R2501	06S15615Y41	RES,RK 471J 1/16 -CP
AUDIO-P.W.Board			R2502	06S15615Y41	RES,RK 471J 1/16 -CP
AUDIO-P.W.Board			R2503	06S15616Y23	RES,RK JUMPER1/16-CP
AUDIO-P.W.Board			R2504	06S15615Y73	RES,RK 103J 1/16 -CP
AUDIO-P.W.Board			R2505	06S15615Y73	RES,RK 103J 1/16 -CP
AUDIO-P.W.Board			R2506	06S15615Y65	RES,RK 472J 1/16 -CP
AUDIO-P.W.Board			R2507	06S15615Y73	RES,RK 103J 1/16 -CP
AUDIO-P.W.Board			R2509	06S15615Y41	RES,RK 471J 1/16 -CP
AUDIO-P.W.Board			R2510	06S15615Y73	RES,RK 103J 1/16 -CP
AUDIO-P.W.Board			R2511	06S15616Y23	RES,RK JUMPER1/16-CP
AUDIO-P.W.Board			R2512	06S15615Y73	RES,RK 103J 1/16 -CP
AUDIO-P.W.Board			R2513	06S65415Y37	RES,RK 103F 1/16 -CP
AUDIO-P.W.Board			R2514	06S15616Y23	RES,RK JUMPER1/16-CP
AUDIO-P.W.Board			R2515	06S15616Y23	RES,RK JUMPER1/16-CP
AUDIO-P.W.Board			R2516	06S65415Y37	RES,RK 103F 1/16 -CP
AUDIO-P.W.Board			R2519	06S15615Y09	RES,RK 22RJ 1/16 -CP
AUDIO-P.W.Board			R2520	06S15615Y09	RES,RK 22RJ 1/16 -CP
AUDIO-P.W.Board			R2522	06S35095Y08	RES,RK JUMPER 1/4-CP
AUDIO-P.W.Board			R2523	06S15615Y65	RES,RK 472J 1/16 -CP
AUDIO-P.W.Board			R2524	06S15615Y73	RES,RK 103J 1/16 -CP
AUDIO-P.W.Board			R2525	06S15615Y73	RES,RK 103J 1/16 -CP
AUDIO-P.W.Board			R2528	06S15616Y23	RES,RK JUMPER1/16-CP
AUDIO-P.W.Board			R2530	06S35095Y08	RES,RK JUMPER 1/4-CP
AUDIO-P.W.Board			R2532	06S15616Y23	RES,RK JUMPER1/16-CP
AUDIO-P.W.Board			R2534	06S35095Y08	RES,RK JUMPER 1/4-CP
AUDIO-P.W.Board			R2540	06S15616Y23	RES,RK JUMPER1/16-CP

P.W.Board	MIS	MODEL	Ref.	Parts No.	Parts Name
AUDIO-P.W.Board			R2541	06S65415Y37	RES,RK 103F 1/16 -CP
AUDIO-P.W.Board			R2542	06S65415Y37	RES,RK 103F 1/16 -CP
AUDIO-P.W.Board			R2543	06S65415Y37	RES,RK 103F 1/16 -CP
AUDIO-P.W.Board			R2544	06S15616Y23	RES,RK JUMPER1/16-CP
AUDIO-P.W.Board			R2545	06S15616Y23	RES,RK JUMPER1/16-CP
AUDIO-P.W.Board			R2546	06S15616Y23	RES,RK JUMPER1/16-CP
AUDIO-P.W.Board			R2547	06S15615Y41	RES,RK 471J 1/16 -CP
AUDIO-P.W.Board			R2548	06S15615Y41	RES,RK 471J 1/16 -CP
AUDIO-P.W.Board			R2549	06S15615Y41	RES,RK 471J 1/16 -CP
AUDIO-P.W.Board			R2604	06S65415Y37	RES,RK 103F 1/16 -CP
AUDIO-P.W.Board			R2605	06S65415Y41	RES,RK 223F 1/16 -CP
AUDIO-P.W.Board			R2650	06S15615Y25	RES,RK 101J 1/16 -CP
AUDIO-P.W.Board			R2651	06S15615Y49	RES,RK 102J 1/16 -CP
AUDIO-P.W.Board			R2652	06S15615Y49	RES,RK 102J 1/16 -CP
AUDIO-P.W.Board			R2653	06S15615Y89	RES,RK 473J 1/16 -CP
AUDIO-P.W.Board			R2654	06S45674W41	RES,RK 221J 1/10 -CP
AUDIO-P.W.Board			R2655	06S15616Y23	RES,RK JUMPER1/16-CP
AUDIO-P.W.Board			R2850	06S15616Y23	RES,RK JUMPER1/16-CP
AUDIO-P.W.Board			R2851	06S15616Y23	RES,RK JUMPER1/16-CP
AUDIO-P.W.Board			R2852	06S15615Y89	RES,RK 473J 1/16 -CP
AUDIO-P.W.Board			R2853	06S15615Y89	RES,RK 473J 1/16 -CP
AUDIO-P.W.Board			R2854	06S65415Y61	RES,RK 105F 1/16 -CP
AUDIO-P.W.Board			R2855	06S15616Y43	RES,RK 106J 1/16 -CP
AUDIO-P.W.Board			R2856	06S65415Y33	RES,RK 472F 1/16 -CP
AUDIO-P.W.Board			R2857	06S15615Y25	RES,RK 101J 1/16 -CP
AUDIO-P.W.Board			R2858	06S15615Y25	RES,RK 101J 1/16 -CP

P.W.Board	MIS	MODEL	Ref.	Parts No.	Parts Name
AUDIO-P.W.Board			R2859	06S15615Y25	RES,RK 101J 1/16 -CP
AUDIO-P.W.Board			R2860	06S15616Y23	RES,RK JUMPER1/16-CP
AUDIO-P.W.Board			R2864	06S45675W43	RES,RK JUMPER1/10-CP
AUDIO-P.W.Board			R2902	06S15594Y14	RES,RK 474F 1/10 -CP
AUDIO-P.W.Board			R2903	06S15594Y14	RES,RK 474F 1/10 -CP
AUDIO-P.W.Board			R2904	06S65415Y11	RES,RK 68RF 1/16 -CP
AUDIO-P.W.Board			R2905	06S45675W43	RES,RK JUMPER1/10-CP
AUDIO-P.W.Board			R2906	06S45675W43	RES,RK JUMPER1/10-CP
AUDIO-P.W.Board			R2950	06S65415Y41	RES,RK 223F 1/16 -CP
AUDIO-P.W.Board			R2963	06S65415Y35	RES,RK 682F 1/16 -CP
AUDIO-P.W.Board			R2965	06S65415Y05	RES,RK 22RF 1/16 -CP
AUDIO-P.W.Board			R2966	06S65415Y10	RES,RK 56RF 1/16 -CP
AUDIO-P.W.Board			R2967	06S35083Y19	RES,RK 331F 1/4 -CP
AUDIO-P.W.Board			R3000	06S15616Y14	RES,RK 474J 1/16 -CP
AUDIO-P.W.Board			R3007	06S65415Y37	RES,RK 103F 1/16 -CP
AUDIO-P.W.Board			R3008	06S65415Y37	RES,RK 103F 1/16 -CP
AUDIO-P.W.Board			R3009	06S65415Y37	RES,RK 103F 1/16 -CP
AUDIO-P.W.Board			R3010	06S15616Y23	RES,RK JUMPER1/16-CP
AUDIO-P.W.Board			R3011	06S15616Y23	RES,RK JUMPER1/16-CP
AUDIO-P.W.Board			R3012	06S15616Y23	RES,RK JUMPER1/16-CP
AUDIO-P.W.Board			R3014	06S15615Y19	RES,RK 56RJ 1/16 -CP
AUDIO-P.W.Board			R3015	06S65415Y37	RES,RK 103F 1/16 -CP
AUDIO-P.W.Board			R3016	06S15615Y25	RES,RK 101J 1/16 -CP
AUDIO-P.W.Board			R3019	06S15616Y23	RES,RK JUMPER1/16-CP
AUDIO-P.W.Board			R3023	06S65415Y37	RES,RK 103F 1/16 -CP
AUDIO-P.W.Board			R3025	06S65415Y37	RES,RK 103F 1/16 -CP

P.W.Board	MIS	MODEL	Ref.	Parts No.	Parts Name
AUDIO-P.W.Board			R3100	06S45674W81	RES,RK 103J 1/10 -CP
AUDIO-P.W.Board			R3102	06S45674W81	RES,RK 103J 1/10 -CP
AUDIO-P.W.Board			R3105	06S15616Y23	RES,RK JUMPER1/16-CP
AUDIO-P.W.Board			R3106	06S15616Y23	RES,RK JUMPER1/16-CP
AUDIO-P.W.Board			R3109	06S45674W57	RES,RK 102J 1/10 -CP
AUDIO-P.W.Board			R3130	06S45674W57	RES,RK 102J 1/10 -CP
AUDIO-P.W.Board			R3131	06S45674W57	RES,RK 102J 1/10 -CP
AUDIO-P.W.Board			R3132	06S45674W57	RES,RK 102J 1/10 -CP
AUDIO-P.W.Board			R3133	06S45674W57	RES,RK 102J 1/10 -CP
AUDIO-P.W.Board			R3134	06S45674W57	RES,RK 102J 1/10 -CP
AUDIO-P.W.Board			R3135	06S45674W57	RES,RK 102J 1/10 -CP
AUDIO-P.W.Board			R3150	06S45675W43	RES,RK JUMPER1/10-CP
AUDIO-P.W.Board			R3151	06S45675W43	RES,RK JUMPER1/10-CP
AUDIO-P.W.Board			R3152	06S45675W43	RES,RK JUMPER1/10-CP
AUDIO-P.W.Board			R3153	06S70072F51	RES,CP .821-J-1/4-CP
AUDIO-P.W.Board			R3154	06S70072F53	RES,CP .102-J-1/4-CP
AUDIO-P.W.Board			R3155	06S70072F53	RES,CP .102-J-1/4-CP
AUDIO-P.W.Board			R3156	06S70072F98	RES,RK 223J 1/4 -CP
AUDIO-P.W.Board			R3158	06S65415Y41	RES,RK 223F 1/16 -CP
AUDIO-P.W.Board			R3159	06S15615Y41	RES,RK 471J 1/16 -CP
AUDIO-P.W.Board			R3200	06S65415Y41	RES,RK 223F 1/16 -CP
AUDIO-P.W.Board			R3202	06S15616Y14	RES,RK 474J 1/16 -CP
AUDIO-P.W.Board			R3203	06S35083Y39	RES,RK 153F 1/4 -CP
AUDIO-P.W.Board			R3204	06S15593Y86	RES,RK 363F 1/10 -CP
AUDIO-P.W.Board			R3205	06S65415Y30	RES,RK 272F 1/16 -CP
AUDIO-P.W.Board			R3206	06S65415Y41	RES,RK 223F 1/16 -CP

P.W.Board	MIS	MODEL	Ref.	Parts No.	Parts Name
AUDIO-P.W.Board			R3207	06S35083Y43	RES,RK 333F 1/4 -CP
AUDIO-P.W.Board			R3208	06S35083Y40	RES,RK 183F 1/4 -CP
AUDIO-P.W.Board			R3209	06S70072F69	RES,CP .472-J-1/4-CP
AUDIO-P.W.Board			R3210	06S70072F69	RES,CP .472-J-1/4-CP
AUDIO-P.W.Board			R3211	06S15615Y89	RES,RK 473J 1/16 -CP
AUDIO-P.W.Board			R3213	06S15616Y23	RES,RK JUMPER1/16-CP
AUDIO-P.W.Board			R3218	06S65415Y41	RES,RK 223F 1/16 -CP
AUDIO-P.W.Board			R3219	06S65415Y41	RES,RK 223F 1/16 -CP
AUDIO-P.W.Board			R3224	06S65415Y37	RES,RK 103F 1/16 -CP
AUDIO-P.W.Board			R3225	06S15616Y23	RES,RK JUMPER1/16-CP
AUDIO-P.W.Board			R3227	06S65415Y37	RES,RK 103F 1/16 -CP
AUDIO-P.W.Board			R3228	06S65415Y37	RES,RK 103F 1/16 -CP
AUDIO-P.W.Board			R3234	06S15593Y81	RES,RK 223F 1/10 -CP
AUDIO-P.W.Board			R3235	06S15593Y61	RES,RK 332F 1/10 -CP
AUDIO-P.W.Board			R3236	06S45674W65	RES,RK 222J 1/10 -CP
AUDIO-P.W.Board			R3237	06S15593Y81	RES,RK 223F 1/10 -CP
AUDIO-P.W.Board			R3239	06S15615Y25	RES,RK 101J 1/16 -CP
AUDIO-P.W.Board			R3240	06S65415Y37	RES,RK 103F 1/16 -CP
AUDIO-P.W.Board			R3241	06S15616Y23	RES,RK JUMPER1/16-CP
AUDIO-P.W.Board			R3242	06S15616Y23	RES,RK JUMPER1/16-CP
AUDIO-P.W.Board			R3245	06S65415Y41	RES,RK 223F 1/16 -CP
AUDIO-P.W.Board			R3246	06S15615Y61	RES,RK 332J 1/16 -CP
AUDIO-P.W.Board			R3249	06S45674W57	RES,RK 102J 1/10 -CP
AUDIO-P.W.Board			R3250	06S15616Y06	RES,RK 224J 1/16 -CP
AUDIO-P.W.Board			R3251	06S15615Y61	RES,RK 332J 1/16 -CP
AUDIO-P.W.Board			R3252	06S45674W57	RES,RK 102J 1/10 -CP

P.W.Board	MIS	MODEL	Ref.	Parts No.	Parts Name
AUDIO-P.W.Board			R3254	06S15616Y06	RES,RK 224J 1/16 -CP
AUDIO-P.W.Board			R3301	06S15616Y23	RES,RK JUMPER1/16-CP
AUDIO-P.W.Board			R3302	06S15616Y23	RES,RK JUMPER1/16-CP
AUDIO-P.W.Board			R3303	06S15616Y23	RES,RK JUMPER1/16-CP
AUDIO-P.W.Board			R3305	06S15616Y23	RES,RK JUMPER1/16-CP
AUDIO-P.W.Board			R3306	06S15616Y23	RES,RK JUMPER1/16-CP
AUDIO-P.W.Board			R3307	06S15616Y23	RES,RK JUMPER1/16-CP
AUDIO-P.W.Board			R3308	06S15616Y23	RES,RK JUMPER1/16-CP
AUDIO-P.W.Board			R3311	06S15616Y23	RES,RK JUMPER1/16-CP
AUDIO-P.W.Board			R3313	06S15616Y23	RES,RK JUMPER1/16-CP
AUDIO-P.W.Board			R3400	06S15594Y01	RES,RK 134F 1/10 -CP
AUDIO-P.W.Board			R3401	06S15593Y96	RES,RK 913F 1/10 -CP
AUDIO-P.W.Board			R3402	06S15593Y66	RES,RK 512F 1/10 -CP
AUDIO-P.W.Board			R3403	06S15593Y93	RES,RK 683F 1/10 -CP
AUDIO-P.W.Board			R3404	06S15593Y67	RES,RK 562F 1/10 -CP
AUDIO-P.W.Board			R3405	06S15594Y09	RES,RK 304F 1/10 -CP
AUDIO-P.W.Board			R3406	06S15593Y95	RES,RK 823F 1/10 -CP
AUDIO-P.W.Board			R3407	06S70072F63	RES,CP .272-J-1/4-CP
AUDIO-P.W.Board			R3408	06S65415Y32	RES,RK 392F 1/16 -CP
AUDIO-P.W.Board			R3409	06S65415Y35	RES,RK 682F 1/16 -CP
AUDIO-P.W.Board			R3410	06S70072F77	RES,CP .103-J-1/4-CP
AUDIO-P.W.Board			R3411	06S65415Y35	RES,RK 682F 1/16 -CP
AUDIO-P.W.Board			R3412	06S65415Y35	RES,RK 682F 1/16 -CP
AUDIO-P.W.Board			R3413	06S65415Y43	RES,RK 333F 1/16 -CP
AUDIO-P.W.Board			R3414	06S65415Y41	RES,RK 223F 1/16 -CP
AUDIO-P.W.Board			R3415	06S15593Y66	RES,RK 512F 1/10 -CP

P.W.Board	MIS	MODEL	Ref.	Parts No.	Parts Name
AUDIO-P.W.Board			R3416	06S15616Y23	RES,RK JUMPER1/16-CP
AUDIO-P.W.Board			R3417	06S15616Y23	RES,RK JUMPER1/16-CP
AUDIO-P.W.Board			R3430	06S65415Y47	RES,RK 683F 1/16 -CP
AUDIO-P.W.Board			R3431	06S65415Y30	RES,RK 272F 1/16 -CP
AUDIO-P.W.Board			R3432	06S65415Y35	RES,RK 682F 1/16 -CP
AUDIO-P.W.Board			R3433	06S15594Y17	RES,RK 624F 1/10 -CP
AUDIO-P.W.Board			R3434	06S15593Y90	RES,RK 513F 1/10 -CP
AUDIO-P.W.Board			R3440	06S15594Y19	RES,RK 754F 1/10 -CP
AUDIO-P.W.Board			R3442	06S65415Y38	RES,RK 123F 1/16 -CP
AUDIO-P.W.Board			R3443	06S65415Y30	RES,RK 272F 1/16 -CP
AUDIO-P.W.Board			R3444	06S65415Y33	RES,RK 472F 1/16 -CP
AUDIO-P.W.Board			R3445	06S15593Y91	RES,RK 563F 1/10 -CP
AUDIO-P.W.Board			R3461	06S65415Y29	RES,RK 222F 1/16 -CP
AUDIO-P.W.Board			R3462	06S65415Y18	RES,RK 271F 1/16 -CP
AUDIO-P.W.Board			R3463	06S65415Y33	RES,RK 472F 1/16 -CP
AUDIO-P.W.Board			R3464	06S15593Y67	RES,RK 562F 1/10 -CP
AUDIO-P.W.Board			R3465	06S15593Y93	RES,RK 683F 1/10 -CP
AUDIO-P.W.Board			R3471	06S65415Y29	RES,RK 222F 1/16 -CP
AUDIO-P.W.Board			R3472	06S65415Y21	RES,RK 471F 1/16 -CP
AUDIO-P.W.Board			R3473	06S65415Y33	RES,RK 472F 1/16 -CP
AUDIO-P.W.Board			R3474	06S15593Y71	RES,RK 822F 1/10 -CP
AUDIO-P.W.Board			R3475	06S15594Y16	RES,RK 564F 1/10 -CP
AUDIO-P.W.Board			R3480	06S15593Y92	RES,RK 623F 1/10 -CP
AUDIO-P.W.Board			R3482	06S65415Y38	RES,RK 123F 1/16 -CP
AUDIO-P.W.Board			R3483	06S65415Y30	RES,RK 272F 1/16 -CP
AUDIO-P.W.Board			R3484	06S65415Y33	RES,RK 472F 1/16 -CP

P.W.Board	MIS	MODEL	Ref.	Parts No.	Parts Name
AUDIO-P.W.Board			R3485	06S15594Y12	RES,RK 394F 1/10 -CP
AUDIO-P.W.Board			R3492	06S35083Y64	RES,RK 3R3F 1/4 -CP
AUDIO-P.W.Board			R3493	06S45675W43	RES,RK JUMPER1/10-CP
AUDIO-P.W.Board			R3500	06S15615Y49	RES,RK 102J 1/16 -CP
AUDIO-P.W.Board			R3510	06S65415Y37	RES,RK 103F 1/16 -CP
AUDIO-P.W.Board			R3511	06S15593Y66	RES,RK 512F 1/10 -CP
AUDIO-P.W.Board			R3512	06S15594Y03	RES,RK 164F 1/10 -CP
AUDIO-P.W.Board			R3600	06S35095Y08	RES,RK JUMPER 1/4-CP
AUDIO-P.W.Board			R3601	06S65415Y38	RES,RK 123F 1/16 -CP
AUDIO-P.W.Board			R3602	06S15594Y02	RES,RK 154F 1/10 -CP
AUDIO-P.W.Board			R3603	06S65415Y31	RES,RK 332F 1/16 -CP
AUDIO-P.W.Board			R3604	06S65415Y42	RES,RK 273F 1/16 -CP
AUDIO-P.W.Board			R3606	06S65415Y27	RES,RK 152F 1/16 -CP
AUDIO-P.W.Board			R3608	06S15593Y66	RES,RK 512F 1/10 -CP
AUDIO-P.W.Board			R3609	06S15615Y69	RES,RK 682J 1/16 -CP
AUDIO-P.W.Board			R3610	06S15615Y25	RES,RK 101J 1/16 -CP
AUDIO-P.W.Board			R3630	06S70072F31	RES,CP .121-J-1/4-CP
AUDIO-P.W.Board			SA2901	08-19391Z01	VST,IMSA-6803-01Y-CP
AUDIO-P.W.Board			SD2440	48-22179Z01	DIO,SHT DB3X313F0LCP
AUDIO-P.W.Board			SD2441	48T35138Y01	DIO,SHT RB160L-40-E1
AUDIO-P.W.Board			SD3601	48-19296Z01	DIO,SHT RB056L-40-E1
AUDIO-P.W.Board			T3100	25-12466Z01	CHOKE,GLI-UB3442 -DB
AUDIO-P.W.Board			TH2000	48T75219Y02	TMT,NCP18WB473F1S-CP
AUDIO-P.W.Board			TML3000	29-22540Z01	OGCP-702020 -E4
AUDIO-P.W.Board			VT2901	24-29820Z01	COIL,RF FM M5-N/R-E5
AUDIO-P.W.Board			XL2000	91-16024Z01	XTL,AT-41CD2 3.98-E9

P.W.Board	MIS	MODEL	Ref.	Parts No.	Parts Name
AUDIO-P.W.Board			XL2001	91-26198Z03	XTL,NX3215 32.7NS-E1
AUDIO-P.W.Board			XL2200	91-26661Z31	XTL,NX3225SAAG55.4CP
AUDIO-P.W.Board			XL2500	91-26661Z02	XTL,NX3225SAAG12.2CP
AUDIO-P.W.Board			XL2850	91-26198Z03	XTL,NX3215 32.7NS-E1
AUDIO-P.W.Board			XL3001	91-26661Z31	XTL,NX3225SAAG55.4CP
AUDIO-P.W.Board			ZD3100	48-23921Z01	DIO,ZEN ZSH5MAZ27-ED
AUDIO-P.W.Board			ZD3130	48-21149Z23	DIO,ZEN DZ2J056M0LCP
AUDIO-P.W.Board			ZD3150	48-21149Z23	DIO,ZEN DZ2J056M0LCP
AUDIO-P.W.Board			ZD3151	48-21149Z23	DIO,ZEN DZ2J056M0LCP
AUDIO-P.W.Board			ZD3152	48-21149Z23	DIO,ZEN DZ2J056M0LCP
AUDIO-P.W.Board			ZD3200	48-16145Z25	DIO,ZEN PZU6.2B2 -CP
AUDIO-P.W.Board			ZD3201	48-21149Z23	DIO,ZEN DZ2J056M0LCP
AUDIO-P.W.Board			ZD3202	48-01607Z08	DIO,ZEN LUDZ3.9B -CP
I.MX-P.W.Board			ANT5501	09-07494Z01	U.FL-R-SMT-1(80)-E2
I.MX-P.W.Board			C4000	08S45231Y05	CAP,CER 2R0C-CK1H-CP
I.MX-P.W.Board			C4001	08S45231Y05	CAP,CER 2R0C-CK1H-CP
I.MX-P.W.Board			C4002	08S45231Y09	CAP,CER 6R0D-CH1H-CP
I.MX-P.W.Board			C4003	08S45231Y09	CAP,CER 6R0D-CH1H-CP
I.MX-P.W.Board			C4007	08-12461Z01	CAP,CER 104M-C80J-CP
I.MX-P.W.Board			C4008	08-12461Z01	CAP,CER 104M-C80J-CP
I.MX-P.W.Board			C4009	08S45232Y05	CAP,CER 102K-B1H -CP
I.MX-P.W.Board			C4010	08S45232Y05	CAP,CER 102K-B1H -CP
I.MX-P.W.Board			C4014	08-12461Z01	CAP,CER 104M-C80J-CP
I.MX-P.W.Board			C4015	08-12461Z01	CAP,CER 104M-C80J-CP
I.MX-P.W.Board			C4016	08-12461Z01	CAP,CER 104M-C80J-CP
I.MX-P.W.Board			C4017	08-12461Z01	CAP,CER 104M-C80J-CP

P.W.Board	MIS	MODEL	Ref.	Parts No.	Parts Name
I.MX-P.W.Board			C4018	08-12461Z01	CAP,CER 104M-C80J-CP
I.MX-P.W.Board			C4024	08-12461Z01	CAP,CER 104M-C80J-CP
I.MX-P.W.Board			C4025	08-12461Z01	CAP,CER 104M-C80J-CP
I.MX-P.W.Board			C4026	08-12461Z01	CAP,CER 104M-C80J-CP
I.MX-P.W.Board			C4027	08-12461Z01	CAP,CER 104M-C80J-CP
I.MX-P.W.Board			C4028	08-12461Z01	CAP,CER 104M-C80J-CP
I.MX-P.W.Board			C4029	08S35374W12	CAP,CER 106K-B0J -CP
I.MX-P.W.Board			C4030	08S65668Y05	CAP,CER 224KX5R1A-CP
I.MX-P.W.Board			C4031	08S65668Y05	CAP,CER 224KX5R1A-CP
I.MX-P.W.Board			C4032	08S65670Y06	CAP,CER 226KX5R1A-CP
I.MX-P.W.Board			C4033	08-12461Z01	CAP,CER 104M-C80J-CP
I.MX-P.W.Board			C4034	08-12461Z01	CAP,CER 104M-C80J-CP
I.MX-P.W.Board			C4035	08-12461Z01	CAP,CER 104M-C80J-CP
I.MX-P.W.Board			C4036	08-12461Z01	CAP,CER 104M-C80J-CP
I.MX-P.W.Board			C4037	08-12461Z01	CAP,CER 104M-C80J-CP
I.MX-P.W.Board			C4038	08-12461Z01	CAP,CER 104M-C80J-CP
I.MX-P.W.Board			C4039	08-12461Z01	CAP,CER 104M-C80J-CP
I.MX-P.W.Board			C4040	08-12461Z01	CAP,CER 104M-C80J-CP
I.MX-P.W.Board			C4041	08S35374W12	CAP,CER 106K-B0J -CP
I.MX-P.W.Board			C4042	08S45232Y17	CAP,CER 104K-B0J -CP
I.MX-P.W.Board			C4043	08S45232Y17	CAP,CER 104K-B0J -CP
I.MX-P.W.Board			C4044	08S45232Y17	CAP,CER 104K-B0J -CP
I.MX-P.W.Board			C4045	08S45232Y17	CAP,CER 104K-B0J -CP
I.MX-P.W.Board			C4046	08S45232Y17	CAP,CER 104K-B0J -CP
I.MX-P.W.Board			C4047	08S45232Y17	CAP,CER 104K-B0J -CP
I.MX-P.W.Board			C4048	08S45232Y17	CAP,CER 104K-B0J -CP

P.W.Board	MIS	MODEL	Ref.	Parts No.	Parts Name
I.MX-P.W.Board			C4049	08-32878Z05	CAP,CER105KX7R1AQ2CP
I.MX-P.W.Board			C4050	08S45232Y17	CAP,CER 104K-B0J -CP
I.MX-P.W.Board			C4051	08S35374W11	CAP,CER 475K-B0J -CP
I.MX-P.W.Board			C4052	08S45232Y17	CAP,CER 104K-B0J -CP
I.MX-P.W.Board			C4053	08S65669Y03	CAP,CER 224KX7R1H-CP
I.MX-P.W.Board			C4054	08-12461Z01	CAP,CER 104M-C80J-CP
I.MX-P.W.Board			C4055	08-12461Z01	CAP,CER 104M-C80J-CP
I.MX-P.W.Board			C4056	08-12461Z01	CAP,CER 104M-C80J-CP
I.MX-P.W.Board			C4057	08-12461Z01	CAP,CER 104M-C80J-CP
I.MX-P.W.Board			C4058	08-12461Z01	CAP,CER 104M-C80J-CP
I.MX-P.W.Board			C4061	08S65670Y06	CAP,CER 226KX5R1A-CP
I.MX-P.W.Board			C4063	08-12461Z01	CAP,CER 104M-C80J-CP
I.MX-P.W.Board			C4064	08-12461Z01	CAP,CER 104M-C80J-CP
I.MX-P.W.Board			C4065	08-12461Z01	CAP,CER 104M-C80J-CP
I.MX-P.W.Board			C4066	08-12461Z01	CAP,CER 104M-C80J-CP
I.MX-P.W.Board			C4067	08S65670Y06	CAP,CER 226KX5R1A-CP
I.MX-P.W.Board			C4068	08-12461Z01	CAP,CER 104M-C80J-CP
I.MX-P.W.Board			C4069	08-12461Z01	CAP,CER 104M-C80J-CP
I.MX-P.W.Board			C4070	08-12461Z01	CAP,CER 104M-C80J-CP
I.MX-P.W.Board			C4071	08-12461Z01	CAP,CER 104M-C80J-CP
I.MX-P.W.Board			C4072	08S45232Y17	CAP,CER 104K-B0J -CP
I.MX-P.W.Board			C4073	08S45232Y17	CAP,CER 104K-B0J -CP
I.MX-P.W.Board			C4074	08S45232Y17	CAP,CER 104K-B0J -CP
I.MX-P.W.Board			C4075	08S45232Y17	CAP,CER 104K-B0J -CP
I.MX-P.W.Board			C4076	08S35374W11	CAP,CER 475K-B0J -CP
I.MX-P.W.Board			C4077	08S65668Y05	CAP,CER 224KX5R1A-CP

P.W.Board	MIS	MODEL	Ref.	Parts No.	Parts Name
I.MX-P.W.Board			C4078	08-12461Z01	CAP,CER 104M-C80J-CP
I.MX-P.W.Board			C4079	08S35374W12	CAP,CER 106K-B0J -CP
I.MX-P.W.Board			C4080	08S45232Y17	CAP,CER 104K-B0J -CP
I.MX-P.W.Board			C4081	08S65670Y06	CAP,CER 226KX5R1A-CP
I.MX-P.W.Board			C4082	08S35374W12	CAP,CER 106K-B0J -CP
I.MX-P.W.Board			C4083	08S65670Y06	CAP,CER 226KX5R1A-CP
I.MX-P.W.Board			C4200	08-12461Z01	CAP,CER 104M-C80J-CP
I.MX-P.W.Board			C4201	08-12461Z01	CAP,CER 104M-C80J-CP
I.MX-P.W.Board			C4202	08-12461Z01	CAP,CER 104M-C80J-CP
I.MX-P.W.Board			C4203	08-12461Z01	CAP,CER 104M-C80J-CP
I.MX-P.W.Board			C4204	08S45232Y17	CAP,CER 104K-B0J -CP
I.MX-P.W.Board			C4205	08-12461Z01	CAP,CER 104M-C80J-CP
I.MX-P.W.Board			C4206	08-12461Z01	CAP,CER 104M-C80J-CP
I.MX-P.W.Board			C4207	08-12461Z01	CAP,CER 104M-C80J-CP
I.MX-P.W.Board			C4208	08S45232Y17	CAP,CER 104K-B0J -CP
I.MX-P.W.Board			C4209	08-12461Z01	CAP,CER 104M-C80J-CP
I.MX-P.W.Board			C4210	08-12461Z01	CAP,CER 104M-C80J-CP
I.MX-P.W.Board			C4211	08S45232Y05	CAP,CER 102K-B1H -CP
I.MX-P.W.Board			C4212	08S45232Y05	CAP,CER 102K-B1H -CP
I.MX-P.W.Board			C4213	08-12461Z01	CAP,CER 104M-C80J-CP
I.MX-P.W.Board			C4214	08-12461Z01	CAP,CER 104M-C80J-CP
I.MX-P.W.Board			C4215	08S45232Y05	CAP,CER 102K-B1H -CP
I.MX-P.W.Board			C4216	08S45232Y05	CAP,CER 102K-B1H -CP
I.MX-P.W.Board			C4217	08-12461Z01	CAP,CER 104M-C80J-CP
I.MX-P.W.Board			C4218	08-12461Z01	CAP,CER 104M-C80J-CP
I.MX-P.W.Board			C4219	08-12461Z01	CAP,CER 104M-C80J-CP

P.W.Board	MIS	MODEL	Ref.	Parts No.	Parts Name
I.MX-P.W.Board			C4220	08-12461Z01	CAP,CER 104M-C80J-CP
I.MX-P.W.Board			C4221	08-12461Z01	CAP,CER 104M-C80J-CP
I.MX-P.W.Board			C4222	08-12461Z01	CAP,CER 104M-C80J-CP
I.MX-P.W.Board			C4223	08-12461Z01	CAP,CER 104M-C80J-CP
I.MX-P.W.Board			C4224	08S45232Y17	CAP,CER 104K-B0J -CP
I.MX-P.W.Board			C4225	08S45232Y17	CAP,CER 104K-B0J -CP
I.MX-P.W.Board			C4226	08-12461Z01	CAP,CER 104M-C80J-CP
I.MX-P.W.Board			C4227	08-12461Z01	CAP,CER 104M-C80J-CP
I.MX-P.W.Board			C4228	08S45232Y05	CAP,CER 102K-B1H -CP
I.MX-P.W.Board			C4229	08S45232Y05	CAP,CER 102K-B1H -CP
I.MX-P.W.Board			C4230	08-12461Z01	CAP,CER 104M-C80J-CP
I.MX-P.W.Board			C4231	08-12461Z01	CAP,CER 104M-C80J-CP
I.MX-P.W.Board			C4232	08S45232Y05	CAP,CER 102K-B1H -CP
I.MX-P.W.Board			C4233	08S45232Y05	CAP,CER 102K-B1H -CP
I.MX-P.W.Board			C4234	08-12461Z01	CAP,CER 104M-C80J-CP
I.MX-P.W.Board			C4235	08-12461Z01	CAP,CER 104M-C80J-CP
I.MX-P.W.Board			C4236	08-12461Z01	CAP,CER 104M-C80J-CP
I.MX-P.W.Board			C4237	08-12461Z01	CAP,CER 104M-C80J-CP
I.MX-P.W.Board			C4238	08-12461Z01	CAP,CER 104M-C80J-CP
I.MX-P.W.Board			C4239	08-12461Z01	CAP,CER 104M-C80J-CP
I.MX-P.W.Board			C4240	08-12461Z01	CAP,CER 104M-C80J-CP
I.MX-P.W.Board			C4241	08S45232Y17	CAP,CER 104K-B0J -CP
I.MX-P.W.Board			C4242	08S45232Y17	CAP,CER 104K-B0J -CP
I.MX-P.W.Board			C4243	08-12461Z01	CAP,CER 104M-C80J-CP
I.MX-P.W.Board			C4244	08-12461Z01	CAP,CER 104M-C80J-CP
I.MX-P.W.Board			C4245	08S45232Y05	CAP,CER 102K-B1H -CP

P.W.Board	MIS	MODEL	Ref.	Parts No.	Parts Name
I.MX-P.W.Board			C4246	08S45232Y05	CAP,CER 102K-B1H -CP
I.MX-P.W.Board			C4247	08-12461Z01	CAP,CER 104M-C80J-CP
I.MX-P.W.Board			C4248	08-12461Z01	CAP,CER 104M-C80J-CP
I.MX-P.W.Board			C4249	08S45232Y05	CAP,CER 102K-B1H -CP
I.MX-P.W.Board			C4250	08S45232Y05	CAP,CER 102K-B1H -CP
I.MX-P.W.Board			C4251	08-12461Z01	CAP,CER 104M-C80J-CP
I.MX-P.W.Board			C4252	08-12461Z01	CAP,CER 104M-C80J-CP
I.MX-P.W.Board			C4253	08-12461Z01	CAP,CER 104M-C80J-CP
I.MX-P.W.Board			C4254	08-12461Z01	CAP,CER 104M-C80J-CP
I.MX-P.W.Board			C4255	08-12461Z01	CAP,CER 104M-C80J-CP
I.MX-P.W.Board			C4256	08-12461Z01	CAP,CER 104M-C80J-CP
I.MX-P.W.Board			C4257	08-12461Z01	CAP,CER 104M-C80J-CP
I.MX-P.W.Board			C4258	08S45232Y17	CAP,CER 104K-B0J -CP
I.MX-P.W.Board			C4259	08S45232Y17	CAP,CER 104K-B0J -CP
I.MX-P.W.Board			C4260	08-12461Z01	CAP,CER 104M-C80J-CP
I.MX-P.W.Board			C4261	08-12461Z01	CAP,CER 104M-C80J-CP
I.MX-P.W.Board			C4262	08S45232Y05	CAP,CER 102K-B1H -CP
I.MX-P.W.Board			C4263	08S45232Y05	CAP,CER 102K-B1H -CP
I.MX-P.W.Board			C4264	08-12461Z01	CAP,CER 104M-C80J-CP
I.MX-P.W.Board			C4265	08-12461Z01	CAP,CER 104M-C80J-CP
I.MX-P.W.Board			C4266	08S45232Y05	CAP,CER 102K-B1H -CP
I.MX-P.W.Board			C4267	08S45232Y05	CAP,CER 102K-B1H -CP
I.MX-P.W.Board			C4268	08-13830Z01	CAP,CER 476MX6S0G-CP
I.MX-P.W.Board			C4269	08S45232Y17	CAP,CER 104K-B0J -CP
I.MX-P.W.Board			C4270	08-13830Z01	CAP,CER 476MX6S0G-CP
I.MX-P.W.Board			C4271	08S45232Y17	CAP,CER 104K-B0J -CP

P.W.Board	MIS	MODEL	Ref.	Parts No.	Parts Name
I.MX-P.W.Board			C4300	08-32878Z05	CAP,CER105KX7R1AQ2CP
I.MX-P.W.Board			C4301	08S45232Y17	CAP,CER 104K-B0J -CP
I.MX-P.W.Board			C4302	08S45232Y17	CAP,CER 104K-B0J -CP
I.MX-P.W.Board			C4400	08S65668Y05	CAP,CER 224KX5R1A-CP
I.MX-P.W.Board			C4401	08S65668Y05	CAP,CER 224KX5R1A-CP
I.MX-P.W.Board			C4402	08S65668Y05	CAP,CER 224KX5R1A-CP
I.MX-P.W.Board			C4403	08S45232Y17	CAP,CER 104K-B0J -CP
I.MX-P.W.Board			C4404	08S35374W11	CAP,CER 475K-B0J -CP
I.MX-P.W.Board			C4500	08S65668Y05	CAP,CER 224KX5R1A-CP
I.MX-P.W.Board			C4600	08S65668Y05	CAP,CER 224KX5R1A-CP
I.MX-P.W.Board			C4601	08S45232Y17	CAP,CER 104K-B0J -CP
I.MX-P.W.Board			C4602	08S45232Y17	CAP,CER 104K-B0J -CP
I.MX-P.W.Board			C4603	08S65668Y07	CAP,CER 103KX5R1H-CP
I.MX-P.W.Board			C4700	08S65668Y05	CAP,CER 224KX5R1A-CP
I.MX-P.W.Board			C5000	08S35374W12	CAP,CER 106K-B0J -CP
I.MX-P.W.Board			C5001	08S45232Y17	CAP,CER 104K-B0J -CP
I.MX-P.W.Board			C5002	08S45232Y11	CAP,CER 103K-B1C -CP
I.MX-P.W.Board			C5003	08S45232Y17	CAP,CER 104K-B0J -CP
I.MX-P.W.Board			C5004	08S45232Y11	CAP,CER 103K-B1C -CP
I.MX-P.W.Board			C5005	08S45232Y17	CAP,CER 104K-B0J -CP
I.MX-P.W.Board			C5006	08S45232Y11	CAP,CER 103K-B1C -CP
I.MX-P.W.Board			C5007	08S45232Y17	CAP,CER 104K-B0J -CP
I.MX-P.W.Board			C5008	08S45232Y11	CAP,CER 103K-B1C -CP
I.MX-P.W.Board			C5009	08S45232Y17	CAP,CER 104K-B0J -CP
I.MX-P.W.Board			C5010	08S45232Y11	CAP,CER 103K-B1C -CP
I.MX-P.W.Board			C5011	08S45232Y17	CAP,CER 104K-B0J -CP

P.W.Board	MIS	MODEL	Ref.	Parts No.	Parts Name
I.MX-P.W.Board			C5012	08S45232Y11	CAP,CER 103K-B1C -CP
I.MX-P.W.Board			C5100	08S35374W12	CAP,CER 106K-B0J -CP
I.MX-P.W.Board			C5101	08S35374W12	CAP,CER 106K-B0J -CP
I.MX-P.W.Board			C5102	08S45232Y17	CAP,CER 104K-B0J -CP
I.MX-P.W.Board			C5103	08S45232Y17	CAP,CER 104K-B0J -CP
I.MX-P.W.Board			C5104	08S45232Y17	CAP,CER 104K-B0J -CP
I.MX-P.W.Board			C5105	08S45232Y17	CAP,CER 104K-B0J -CP
I.MX-P.W.Board			C5106	08S35374W12	CAP,CER 106K-B0J -CP
I.MX-P.W.Board			C5107	08S45232Y17	CAP,CER 104K-B0J -CP
I.MX-P.W.Board			C5108	08S45232Y17	CAP,CER 104K-B0J -CP
I.MX-P.W.Board			C5109	08S35374W12	CAP,CER 106K-B0J -CP
I.MX-P.W.Board			C5110	08S45232Y17	CAP,CER 104K-B0J -CP
I.MX-P.W.Board			C5111	08S45232Y17	CAP,CER 104K-B0J -CP
I.MX-P.W.Board			C5112	08S45232Y17	CAP,CER 104K-B0J -CP
I.MX-P.W.Board			C5113	08S35374W12	CAP,CER 106K-B0J -CP
I.MX-P.W.Board			C5114	08S45232Y17	CAP,CER 104K-B0J -CP
I.MX-P.W.Board			C5115	08S45232Y05	CAP,CER 102K-B1H -CP
I.MX-P.W.Board			C5116	08S45539Y01	CAP,CER 102KX7R2J-CP
I.MX-P.W.Board			C5200	08S65670Y06	CAP,CER 226KX5R1A-CP
I.MX-P.W.Board			C5201	08S45232Y17	CAP,CER 104K-B0J -CP
I.MX-P.W.Board			C5202	08S45232Y17	CAP,CER 104K-B0J -CP
I.MX-P.W.Board			C5203	08S45232Y11	CAP,CER 103K-B1C -CP
I.MX-P.W.Board			C5204	08S45232Y17	CAP,CER 104K-B0J -CP
I.MX-P.W.Board			C5205	08S45232Y11	CAP,CER 103K-B1C -CP
I.MX-P.W.Board			C5206	08S45232Y17	CAP,CER 104K-B0J -CP
I.MX-P.W.Board			C5207	08S45232Y11	CAP,CER 103K-B1C -CP

P.W.Board	MIS	MODEL	Ref.	Parts No.	Parts Name
I.MX-P.W.Board			C5208	08S45232Y17	CAP,CER 104K-B0J -CP
I.MX-P.W.Board			C5209	08S45232Y11	CAP,CER 103K-B1C -CP
I.MX-P.W.Board			C5210	08S45232Y17	CAP,CER 104K-B0J -CP
I.MX-P.W.Board			C5211	08S45232Y11	CAP,CER 103K-B1C -CP
I.MX-P.W.Board			C5212	08S45232Y17	CAP,CER 104K-B0J -CP
I.MX-P.W.Board			C5213	08S45232Y11	CAP,CER 103K-B1C -CP
I.MX-P.W.Board			C5214	08S45232Y17	CAP,CER 104K-B0J -CP
I.MX-P.W.Board			C5215	08S45232Y11	CAP,CER 103K-B1C -CP
I.MX-P.W.Board			C5216	08S45232Y17	CAP,CER 104K-B0J -CP
I.MX-P.W.Board			C5217	08S45232Y11	CAP,CER 103K-B1C -CP
I.MX-P.W.Board			C5218	08S35374W10	CAP,CER 225K-B1A -CP
I.MX-P.W.Board			C5219	08S45232Y17	CAP,CER 104K-B0J -CP
I.MX-P.W.Board			C5220	08S45232Y17	CAP,CER 104K-B0J -CP
I.MX-P.W.Board			C5221	08S45232Y11	CAP,CER 103K-B1C -CP
I.MX-P.W.Board			C5222	08S45232Y17	CAP,CER 104K-B0J -CP
I.MX-P.W.Board			C5223	08S45232Y11	CAP,CER 103K-B1C -CP
I.MX-P.W.Board			C5224	08-26091Z01	CAP,CER 102KX7R2J-CP
I.MX-P.W.Board			C5225	08S65669Y03	CAP,CER 224KX7R1H-CP
I.MX-P.W.Board			C5226	08-26091Z01	CAP,CER 102KX7R2J-CP
I.MX-P.W.Board			C5227	08S45231Y15	CAP,CER 15RJ-CH1H-CP
I.MX-P.W.Board			C5228	08S45231Y15	CAP,CER 15RJ-CH1H-CP
I.MX-P.W.Board			C5300	08S35374W12	CAP,CER 106K-B0J -CP
I.MX-P.W.Board			C5301	08-32878Z05	CAP,CER105KX7R1AQ2CP
I.MX-P.W.Board			C5302	08S45232Y17	CAP,CER 104K-B0J -CP
I.MX-P.W.Board			C5303	08-32878Z05	CAP,CER105KX7R1AQ2CP
I.MX-P.W.Board			C5304	08S45232Y17	CAP,CER 104K-B0J -CP

P.W.Board	MIS	MODEL	Ref.	Parts No.	Parts Name
I.MX-P.W.Board			C5305	08-32878Z05	CAP,CER105KX7R1AQ2CP
I.MX-P.W.Board			C5306	08S45232Y17	CAP,CER 104K-B0J -CP
I.MX-P.W.Board			C5307	08S45232Y11	CAP,CER 103K-B1C -CP
I.MX-P.W.Board			C5308	08S45232Y05	CAP,CER 102K-B1H -CP
I.MX-P.W.Board			C5309	08S45232Y11	CAP,CER 103K-B1C -CP
I.MX-P.W.Board			C5310	08S45232Y05	CAP,CER 102K-B1H -CP
I.MX-P.W.Board			C5311	08S35374W12	CAP,CER 106K-B0J -CP
I.MX-P.W.Board			C5312	08-32878Z05	CAP,CER105KX7R1AQ2CP
I.MX-P.W.Board			C5313	08S45232Y17	CAP,CER 104K-B0J -CP
I.MX-P.W.Board			C5314	08-32878Z05	CAP,CER105KX7R1AQ2CP
I.MX-P.W.Board			C5315	08S45232Y17	CAP,CER 104K-B0J -CP
I.MX-P.W.Board			C5316	08-32878Z05	CAP,CER105KX7R1AQ2CP
I.MX-P.W.Board			C5317	08S45232Y17	CAP,CER 104K-B0J -CP
I.MX-P.W.Board			C5318	08S45232Y17	CAP,CER 104K-B0J -CP
I.MX-P.W.Board			C5319	08S45232Y17	CAP,CER 104K-B0J -CP
I.MX-P.W.Board			C5320	08-32878Z05	CAP,CER105KX7R1AQ2CP
I.MX-P.W.Board			C5321	08-32878Z05	CAP,CER105KX7R1AQ2CP
I.MX-P.W.Board			C5322	08S45232Y17	CAP,CER 104K-B0J -CP
I.MX-P.W.Board			C5323	08S45232Y17	CAP,CER 104K-B0J -CP
I.MX-P.W.Board			C5324	08S45232Y17	CAP,CER 104K-B0J -CP
I.MX-P.W.Board			C5325	08S45232Y11	CAP,CER 103K-B1C -CP
I.MX-P.W.Board			C5326	08S45231Y11	CAP,CER 8R0D-CH1H-CP
I.MX-P.W.Board			C5327	08S45231Y13	CAP,CER 10RD-CH1H-CP
I.MX-P.W.Board			C5500	08S65668Y05	CAP,CER 224KX5R1A-CP
I.MX-P.W.Board			C5501	08S65668Y05	CAP,CER 224KX5R1A-CP
I.MX-P.W.Board			C5502	08S65668Y05	CAP,CER 224KX5R1A-CP

P.W.Board	MIS	MODEL	Ref.	Parts No.	Parts Name
I.MX-P.W.Board			C5503	08S65668Y05	CAP,CER 224KX5R1A-CP
I.MX-P.W.Board			C5504	08S65668Y05	CAP,CER 224KX5R1A-CP
I.MX-P.W.Board			C5505	08S65668Y05	CAP,CER 224KX5R1A-CP
I.MX-P.W.Board			C5506	08S65668Y05	CAP,CER 224KX5R1A-CP
I.MX-P.W.Board			C5509	08S45232Y17	CAP,CER 104K-B0J -CP
I.MX-P.W.Board			C5510	08-32878Z05	CAP,CER105KX7R1AQ2CP
I.MX-P.W.Board			C5511	08S45232Y17	CAP,CER 104K-B0J -CP
I.MX-P.W.Board			C5512	08S35374W11	CAP,CER 475K-B0J -CP
I.MX-P.W.Board			C5513	08S35374W11	CAP,CER 475K-B0J -CP
I.MX-P.W.Board			C5514	08S35374W12	CAP,CER 106K-B0J -CP
I.MX-P.W.Board			C5515	08-32878Z05	CAP,CER105KX7R1AQ2CP
I.MX-P.W.Board			C5516	08S35374W12	CAP,CER 106K-B0J -CP
I.MX-P.W.Board			C5517	08S35374W12	CAP,CER 106K-B0J -CP
I.MX-P.W.Board			C5518	08-32878Z05	CAP,CER105KX7R1AQ2CP
I.MX-P.W.Board			C5519	08S35374W12	CAP,CER 106K-B0J -CP
I.MX-P.W.Board			C5600	08S45232Y17	CAP,CER 104K-B0J -CP
I.MX-P.W.Board			C5601	08S65670Y06	CAP,CER 226KX5R1A-CP
I.MX-P.W.Board			C5602	08S65670Y06	CAP,CER 226KX5R1A-CP
I.MX-P.W.Board			C5603	08-32878Z05	CAP,CER105KX7R1AQ2CP
I.MX-P.W.Board			C5604	08-32878Z05	CAP,CER105KX7R1AQ2CP
I.MX-P.W.Board			C5605	08-32878Z05	CAP,CER105KX7R1AQ2CP
I.MX-P.W.Board			C5606	08-32878Z05	CAP,CER105KX7R1AQ2CP
I.MX-P.W.Board			C5607	08S45231Y25	CAP,CER 101J-CH1H-CP
I.MX-P.W.Board			C5608	08S65670Y06	CAP,CER 226KX5R1A-CP
I.MX-P.W.Board			C5609	08S65670Y06	CAP,CER 226KX5R1A-CP
I.MX-P.W.Board			C5610	08S45676W93	CAP,CER 224K-B1A -CP

P.W.Board	MIS	MODEL	Ref.	Parts No.	Parts Name
I.MX-P.W.Board			C5611	08S45231Y25	CAP,CER 101J-CH1H-CP
I.MX-P.W.Board			C5612	08S65670Y06	CAP,CER 226KX5R1A-CP
I.MX-P.W.Board			C5613	08S65670Y06	CAP,CER 226KX5R1A-CP
I.MX-P.W.Board			C5614	08S45676W93	CAP,CER 224K-B1A -CP
I.MX-P.W.Board			C5615	08S45231Y25	CAP,CER 101J-CH1H-CP
I.MX-P.W.Board			C5616	08S65670Y06	CAP,CER 226KX5R1A-CP
I.MX-P.W.Board			C5617	08S65670Y06	CAP,CER 226KX5R1A-CP
I.MX-P.W.Board			C5618	08S45676W93	CAP,CER 224K-B1A -CP
I.MX-P.W.Board			C5619	08S45231Y25	CAP,CER 101J-CH1H-CP
I.MX-P.W.Board			C5620	08S65670Y06	CAP,CER 226KX5R1A-CP
I.MX-P.W.Board			C5621	08S65670Y06	CAP,CER 226KX5R1A-CP
I.MX-P.W.Board			C5622	08S45676W93	CAP,CER 224K-B1A -CP
I.MX-P.W.Board			C5623	08-32878Z05	CAP,CER105KX7R1AQ2CP
I.MX-P.W.Board			C5624	08S45676W93	CAP,CER 224K-B1A -CP
I.MX-P.W.Board			C5625	08-32878Z05	CAP,CER105KX7R1AQ2CP
I.MX-P.W.Board			C5626	08-32878Z05	CAP,CER105KX7R1AQ2CP
I.MX-P.W.Board			C5627	08S45676W93	CAP,CER 224K-B1A -CP
I.MX-P.W.Board			C5628	08-32878Z05	CAP,CER105KX7R1AQ2CP
I.MX-P.W.Board			C5629	08-32878Z05	CAP,CER105KX7R1AQ2CP
I.MX-P.W.Board			C5630	08S45676W93	CAP,CER 224K-B1A -CP
I.MX-P.W.Board			C5631	08-32878Z05	CAP,CER105KX7R1AQ2CP
I.MX-P.W.Board			C5632	08-32878Z05	CAP,CER105KX7R1AQ2CP
I.MX-P.W.Board			C5633	08S45676W93	CAP,CER 224K-B1A -CP
I.MX-P.W.Board			C5637	08-14627Z01	CAP,CER 107MX5R0J-CP
I.MX-P.W.Board			C5638	08-14627Z01	CAP,CER 107MX5R0J-CP
I.MX-P.W.Board			C5650	08S65671Y04	CAP,CER 106KX5R1H-CP

P.W.Board	MIS	MODEL	Ref.	Parts No.	Parts Name
I.MX-P.W.Board			C5651	08S45232Y08	CAP,CER 332K-B1H -CP
I.MX-P.W.Board			C5652	08S45231Y33	CAP,CER 471J-CH1H-CP
I.MX-P.W.Board			C5653	08S45231Y25	CAP,CER 101J-CH1H-CP
I.MX-P.W.Board			C5655	08-14627Z01	CAP,CER 107MX5R0J-CP
I.MX-P.W.Board			C5657	08S65669Y03	CAP,CER 224KX7R1H-CP
I.MX-P.W.Board			C5659	08S65669Y03	CAP,CER 224KX7R1H-CP
I.MX-P.W.Board			C5680	08S65669Y03	CAP,CER 224KX7R1H-CP
I.MX-P.W.Board			C5702	08-32878Z05	CAP,CER105KX7R1AQ2CP
I.MX-P.W.Board			C5703	08S65671Y04	CAP,CER 106KX5R1H-CP
I.MX-P.W.Board			C5704	08S65671Y04	CAP,CER 106KX5R1H-CP
I.MX-P.W.Board			C5705	08S65676Y09	CAP,CER 475KX7R1H-CP
I.MX-P.W.Board			C5706	08S35349Y21	CAP,CER 104K-B1H -CP
I.MX-P.W.Board			C5707	08S65670Y06	CAP,CER 226KX5R1A-CP
I.MX-P.W.Board			C5708	08S65669Y03	CAP,CER 224KX7R1H-CP
I.MX-P.W.Board			C5709	08S65676Y09	CAP,CER 475KX7R1H-CP
I.MX-P.W.Board			C5710	08-32878Z05	CAP,CER105KX7R1AQ2CP
I.MX-P.W.Board			C5711	08S45232Y05	CAP,CER 102K-B1H -CP
I.MX-P.W.Board			C5712	08S45231Y13	CAP,CER 10RD-CH1H-CP
I.MX-P.W.Board			C5713	08S45232Y05	CAP,CER 102K-B1H -CP
I.MX-P.W.Board			C5715	08S45231Y40	CAP,CER 3R9C-CH1H-CP
I.MX-P.W.Board			C5716	08S45231Y40	CAP,CER 3R9C-CH1H-CP
I.MX-P.W.Board			C5800	08S65676Y09	CAP,CER 475KX7R1H-CP
I.MX-P.W.Board			C5801	08S65669Y03	CAP,CER 224KX7R1H-CP
I.MX-P.W.Board			C5802	08S65670Y01	CAP,CER 106KX5R1C-CP
I.MX-P.W.Board			C5803	08S65669Y03	CAP,CER 224KX7R1H-CP
I.MX-P.W.Board			C5804	08S65670Y01	CAP,CER 106KX5R1C-CP

P.W.Board	MIS	MODEL	Ref.	Parts No.	Parts Name
I.MX-P.W.Board			C5805	08S65669Y03	CAP,CER 224KX7R1H-CP
I.MX-P.W.Board			C5806	08S45676W73	CAP,CER.103K-B1H -CP
I.MX-P.W.Board			C5807	08S45232Y11	CAP,CER 103K-B1C -CP
I.MX-P.W.Board			C6007	08-31895Z01	CAP,CER 226MX7S1C-CP
I.MX-P.W.Board			C6008	08S65669Y03	CAP,CER 224KX7R1H-CP
I.MX-P.W.Board			C6009	08S65676Y01	CAP,CER 335KX7R1A-CP
I.MX-P.W.Board			C6014	08S65668Y05	CAP,CER 224KX5R1A-CP
I.MX-P.W.Board			C6300	08S65668Y07	CAP,CER 103KX5R1H-CP
I.MX-P.W.Board			C6301	08S65668Y07	CAP,CER 103KX5R1H-CP
I.MX-P.W.Board			C6302	08S65668Y07	CAP,CER 103KX5R1H-CP
I.MX-P.W.Board			C6303	08S65669Y03	CAP,CER 224KX7R1H-CP
I.MX-P.W.Board			C6310	08S65669Y03	CAP,CER 224KX7R1H-CP
I.MX-P.W.Board			C6311	08S65669Y03	CAP,CER 224KX7R1H-CP
I.MX-P.W.Board			C6313	08S65669Y03	CAP,CER 224KX7R1H-CP
I.MX-P.W.Board			C6314	08S65669Y03	CAP,CER 224KX7R1H-CP
I.MX-P.W.Board			C6315	08S65669Y03	CAP,CER 224KX7R1H-CP
I.MX-P.W.Board			C6320	08S45231Y38	CAP,CER 102J-CH1H-CP
I.MX-P.W.Board			C6400	08S45676W83	CAP,CER 473K-B1C -CP
I.MX-P.W.Board			C6401	08S65670Y04	CAP,CER 475KX5R1E-CP
I.MX-P.W.Board			C6402	08S65670Y04	CAP,CER 475KX5R1E-CP
I.MX-P.W.Board			C6403	08S65668Y05	CAP,CER 224KX5R1A-CP
I.MX-P.W.Board			C6404	08S45676W83	CAP,CER 473K-B1C -CP
I.MX-P.W.Board			C6405	08S65670Y04	CAP,CER 475KX5R1E-CP
I.MX-P.W.Board			C6406	08S65670Y04	CAP,CER 475KX5R1E-CP
I.MX-P.W.Board			C6407	08S65668Y05	CAP,CER 224KX5R1A-CP
I.MX-P.W.Board			C6408	08S65669Y03	CAP,CER 224KX7R1H-CP

P.W.Board	MIS	MODEL	Ref.	Parts No.	Parts Name
I.MX-P.W.Board			C6409	08S45231Y31	CAP,CER 331J-CH1H-CP
I.MX-P.W.Board			C6410	08S45231Y31	CAP,CER 331J-CH1H-CP
I.MX-P.W.Board			C6411	08S45231Y25	CAP,CER 101J-CH1H-CP
I.MX-P.W.Board			C6412	08S65668Y05	CAP,CER 224KX5R1A-CP
I.MX-P.W.Board			C6413	08S65668Y05	CAP,CER 224KX5R1A-CP
I.MX-P.W.Board			C6414	08S65676Y08	CAP,CER 106K-X7R1ACP
I.MX-P.W.Board			C6415	08S65676Y08	CAP,CER 106K-X7R1ACP
I.MX-P.W.Board			C6416	08S45676W73	CAP,CER.103K-B1H -CP
I.MX-P.W.Board			C6417	08S65676Y08	CAP,CER 106K-X7R1ACP
I.MX-P.W.Board			C6418	08S45231Y31	CAP,CER 331J-CH1H-CP
I.MX-P.W.Board			C6419	08S45231Y25	CAP,CER 101J-CH1H-CP
I.MX-P.W.Board			C6420	08S65676Y08	CAP,CER 106K-X7R1ACP
I.MX-P.W.Board			C6421	08S65676Y08	CAP,CER 106K-X7R1ACP
I.MX-P.W.Board			C6422	08S45231Y25	CAP,CER 101J-CH1H-CP
I.MX-P.W.Board			C6423	08-26091Z01	CAP,CER 102KX7R2J-CP
I.MX-P.W.Board			C6424	08S65669Y05	CAP,CER 106KX7R0J-CP
I.MX-P.W.Board			C6425	08S65668Y05	CAP,CER 224KX5R1A-CP
I.MX-P.W.Board			C6426	08S65668Y05	CAP,CER 224KX5R1A-CP
I.MX-P.W.Board			C6427	08S45231Y17	CAP,CER 22RJ-CH1H-CP
I.MX-P.W.Board			C6428	08S35350Y03	CAP,CER 224K-B1C -CP
I.MX-P.W.Board			C6429	08S45231Y17	CAP,CER 22RJ-CH1H-CP
I.MX-P.W.Board			C6430	08S65669Y05	CAP,CER 106KX7R0J-CP
I.MX-P.W.Board			C6431	08S65676Y08	CAP,CER 106K-X7R1ACP
I.MX-P.W.Board			C6432	08S45231Y25	CAP,CER 101J-CH1H-CP
I.MX-P.W.Board			C6433	08S45231Y25	CAP,CER 101J-CH1H-CP
I.MX-P.W.Board			CB5100	09-25213Z01	WTB,TCX3400-011187-T

P.W.Board	MIS	MODEL	Ref.	Parts No.	Parts Name
I.MX-P.W.Board			CB5200	09-25213Z01	WTB,TCX3400-011187-T
I.MX-P.W.Board			CB6100	09-19907Z03	BTB,IMSA9984B-100YEZ
I.MX-P.W.Board			CB6200	09-29915Z04	FFC,50FHH-SM1-GAN-EQ
I.MX-P.W.Board			CB6300	09-29652Z01	BTB,FX23-100P-0.5S-T
I.MX-P.W.Board			CB6400	09-25106Z05	WTB,S18B-PUDSS-1 -DB
I.MX-P.W.Board			D4700	48-05965Z01	DIO,1SS361-L -CP
I.MX-P.W.Board			D5101	48-08988Z01	VST,EZJZ0V800AA -CP
I.MX-P.W.Board			D5102	48-08988Z01	VST,EZJZ0V800AA -CP
I.MX-P.W.Board			D5104	48-08988Z01	VST,EZJZ0V800AA -CP
I.MX-P.W.Board			D5204	48-05164Z01	DIO,1SS352-TPH3 -CP
I.MX-P.W.Board			D6400	48-19711Z01	DIO,BAV99W -CP
I.MX-P.W.Board			D6401	48T75527Y01	DIO,1SR154-400 -E1
I.MX-P.W.Board			E4000	23-22657Z06	CAP,CX 221-0G -E2
I.MX-P.W.Board			E4001	23-22657Z06	CAP,CX 221-0G -E2
I.MX-P.W.Board			E5700	23S75244Y19	CAP,ELY 101-1C -E6
I.MX-P.W.Board			E5701	23-31100Z19	CAP,MAK 33R-1E -E6
I.MX-P.W.Board			E6310	23-31100Z19	CAP,MAK 33R-1E -E6
I.MX-P.W.Board			F6200	65-10745Z09	FUSE,TF16AT 2.00A-CP
I.MX-P.W.Board			IC4000	51-29541Z01	MCIMX6D6AVT08AD -BT
I.MX-P.W.Board			IC4200	51-35099Z01	H5TQ4G63EFR-RDI -BT
I.MX-P.W.Board			IC4201	51-35099Z01	H5TQ4G63EFR-RDI -BT
I.MX-P.W.Board			IC4202	51-35099Z01	H5TQ4G63EFR-RDI -BT
I.MX-P.W.Board			IC4203	51-35099Z01	H5TQ4G63EFR-RDI -BT
I.MX-P.W.Board			IC4300	83-39430Z34	US_NL00031A_iMX_NOR_IC4300
I.MX-P.W.Board			IC4300	51-27465Z01	S29GL256S90TFI010-ST
I.MX-P.W.Board			IC4400	83-39430Z35	US_NL00031A_iMX_EMMC_IC4400

P.W.Board	MIS	MODEL	Ref.	Parts No.	Parts Name
I.MX-P.W.Board			IC4400	51-34725Z01	H26M64208EMRN -BT
I.MX-P.W.Board			IC4500	51-26850Z01	MFI337S3959 -CP
I.MX-P.W.Board			IC4600	51T15185Y03	TC7SH08FU,LJ -CP
I.MX-P.W.Board			IC4601	51T65003Y03	TC7SZ05FU,LJ -CP
I.MX-P.W.Board			IC4602	51T65003Y03	TC7SZ05FU,LJ -CP
I.MX-P.W.Board			IC4700	51T35220Y02	TC7WH126FU,LJ(CB-SE1
I.MX-P.W.Board			IC4702	51T25238Y05	TC7SH32FU,LJ -CP
I.MX-P.W.Board			IC5000	51-19098Z01	BU16002KVT-E2 -QEA
I.MX-P.W.Board			IC5100	51-27798Z01	ADV7511WBSWZ-RL -QEA
I.MX-P.W.Board			IC5200	51-29819Z01	ADV7480WBBCZ -BT
I.MX-P.W.Board			IC5300	51-29818Z01	ML86V8201 -QT
I.MX-P.W.Board			IC5500	51-29718Z01	UGKZ4D6009B -NE9
I.MX-P.W.Board			IC5501	51-13971Z01	TC74VCX08FT-EL -SE5
I.MX-P.W.Board			IC5502	51-31856Z01	TC7WPB9306FK -CP
I.MX-P.W.Board			IC5503	51-31856Z01	TC7WPB9306FK -CP
I.MX-P.W.Board			IC5504	51-31856Z01	TC7WPB9306FK -CP
I.MX-P.W.Board			IC5600	51-29896Z01	LTC3676HUJ#TRA1 -LE6
I.MX-P.W.Board			IC5650	51-28779Z02	BD90640EFJ-CE2 -SE2
I.MX-P.W.Board			IC5700	51-32064Z01	MAX16987RATI/V+ -LE2
I.MX-P.W.Board			IC5800	51-28614Z01	BD00FC0EEFJ-ME2 -SE2
I.MX-P.W.Board			IC5801	51-28341Z01	S-1323B52-N4BB30 -CP
I.MX-P.W.Board			IC6001	51-23593Z02	BD00IC0WEFJ-ME2 -SE2
I.MX-P.W.Board			IC6400	51-12745Z01	BH7073G-TR -CP
I.MX-P.W.Board			IC6401	51-12745Z01	BH7073G-TR -CP
I.MX-P.W.Board			IC6402	51T15192Y03	74VHC14FT-EL -SE2
I.MX-P.W.Board			IC6403	51T25183Y04	TC7SET08FU,LJ -CP

P.W.Board	MIS	MODEL	Ref.	Parts No.	Parts Name
I.MX-P.W.Board			IC6404	51T15185Y03	TC7SH08FU,LJ -CP
I.MX-P.W.Board			IC6405	51-31236Z01	ML22331 -ST
I.MX-P.W.Board			L5100	24-22766Z02	IND,LBC3225 10RM -CP
I.MX-P.W.Board			L5101	24-22766Z02	IND,LBC3225 10RM -CP
I.MX-P.W.Board			L5102	24-22766Z02	IND,LBC3225 10RM -CP
I.MX-P.W.Board			L5103	24-22766Z02	IND,LBC3225 10RM -CP
I.MX-P.W.Board			L5502	24-22766Z01	IND,LBC3225 2R2M -CP
I.MX-P.W.Board			L5503	24-22766Z03	IND,LBC3225 1R0M -CP
I.MX-P.W.Board			L5504	24T25164Y09	IND,FSLM2520 R47J-CP
I.MX-P.W.Board			L5600	24-22372Z05	IND,NRS6045T 2R3N-E2
I.MX-P.W.Board			L5601	24-22372Z05	IND,NRS6045T 2R3N-E2
I.MX-P.W.Board			L5602	24-22372Z05	IND,NRS6045T 2R3N-E2
I.MX-P.W.Board			L5603	24-22372Z05	IND,NRS6045T 2R3N-E2
I.MX-P.W.Board			L5650	24-22372Z05	IND,NRS6045T 2R3N-E2
I.MX-P.W.Board			L5651	24-08610Z03	IND,DS106C2 10RM -EA
I.MX-P.W.Board			L5700	24-23871Z01	IND,NRS8040T 10RM-E6
I.MX-P.W.Board			L5701	24T95458W06	FBI,BLM31PG121SH1-CP
I.MX-P.W.Board			L5704	24T75143Y13	IND,HK1005 R01J -CP
I.MX-P.W.Board			L5705	24T75143Y13	IND,HK1005 R01J -CP
I.MX-P.W.Board			L5723	24T75143Y14	IND,HK1005 R012J -CP
I.MX-P.W.Board			L5725	24T75143Y14	IND,HK1005 R012J -CP
I.MX-P.W.Board			L6400	24T65067Y02	FBI,MMZ1005S601AT-CP
I.MX-P.W.Board			L6401	24T65067Y02	FBI,MMZ1005S601AT-CP
I.MX-P.W.Board			PS6400	48-27319Z01	POLY,SW1812L150/24E2
I.MX-P.W.Board			Q4000	48-18270Z01	TR,2SA1576UBTL -CP
I.MX-P.W.Board			Q4001	48-13000Z05	TR,DTC124EUBTL -CP

P.W.Board	MIS	MODEL	Ref.	Parts No.	Parts Name
I.MX-P.W.Board			Q4700	48-12999Z01	TR,DTA114EUBTL -CP
I.MX-P.W.Board			Q5200	48T25737Y02	TR,UMD3N-TR -CP
I.MX-P.W.Board			Q5800	48T25737Y02	TR,UMD3N-TR -CP
I.MX-P.W.Board			Q6400	48T63417F03	TR,C2412K-BR-96 -CP
I.MX-P.W.Board			R4000	06S15616Y36	RES,RK 225J 1/16 -CP
I.MX-P.W.Board			R4001	06S15616Y23	RES,RK JUMPER1/16-CP
I.MX-P.W.Board			R4003	06S15616Y23	RES,RK JUMPER1/16-CP
I.MX-P.W.Board			R4005	06S15615Y09	RES,RK 22RJ 1/16 -CP
I.MX-P.W.Board			R4006	06S15615Y49	RES,RK 102J 1/16 -CP
I.MX-P.W.Board			R4007	06S15615Y57	RES,RK 222J 1/16 -CP
I.MX-P.W.Board			R4008	06S15615Y57	RES,RK 222J 1/16 -CP
I.MX-P.W.Board			R4009	06S15615Y57	RES,RK 222J 1/16 -CP
I.MX-P.W.Board			R4010	06S15615Y57	RES,RK 222J 1/16 -CP
I.MX-P.W.Board			R4011	06S15616Y23	RES,RK JUMPER1/16-CP
I.MX-P.W.Board			R4012	06S15615Y25	RES,RK 101J 1/16 -CP
I.MX-P.W.Board			R4013	06S15615Y25	RES,RK 101J 1/16 -CP
I.MX-P.W.Board			R4014	06S15615Y25	RES,RK 101J 1/16 -CP
I.MX-P.W.Board			R4015	06S15615Y25	RES,RK 101J 1/16 -CP
I.MX-P.W.Board			R4016	06S15615Y25	RES,RK 101J 1/16 -CP
I.MX-P.W.Board			R4017	06S15615Y09	RES,RK 22RJ 1/16 -CP
I.MX-P.W.Board			R4018	06S15615Y09	RES,RK 22RJ 1/16 -CP
I.MX-P.W.Board			R4020	06S15615Y25	RES,RK 101J 1/16 -CP
I.MX-P.W.Board			R4021	06S15616Y23	RES,RK JUMPER1/16-CP
I.MX-P.W.Board			R4022	06S15616Y23	RES,RK JUMPER1/16-CP
I.MX-P.W.Board			R4023	06S15615Y25	RES,RK 101J 1/16 -CP
I.MX-P.W.Board			R4024	06S15615Y25	RES,RK 101J 1/16 -CP

P.W.Board	MIS	MODEL	Ref.	Parts No.	Parts Name
I.MX-P.W.Board			R4025	06S15615Y25	RES,RK 101J 1/16 -CP
I.MX-P.W.Board			R4026	06S15615Y25	RES,RK 101J 1/16 -CP
I.MX-P.W.Board			R4027	06S15615Y25	RES,RK 101J 1/16 -CP
I.MX-P.W.Board			R4028	06S15615Y25	RES,RK 101J 1/16 -CP
I.MX-P.W.Board			R4030	06S15615Y25	RES,RK 101J 1/16 -CP
I.MX-P.W.Board			R4031	06S15615Y25	RES,RK 101J 1/16 -CP
I.MX-P.W.Board			R4032	06S15615Y25	RES,RK 101J 1/16 -CP
I.MX-P.W.Board			R4033	06S15615Y09	RES,RK 22RJ 1/16 -CP
I.MX-P.W.Board			R4034	06S15616Y23	RES,RK JUMPER1/16-CP
I.MX-P.W.Board			R4035	06S15616Y23	RES,RK JUMPER1/16-CP
I.MX-P.W.Board			R4036	06S15616Y23	RES,RK JUMPER1/16-CP
I.MX-P.W.Board			R4037	06S15616Y23	RES,RK JUMPER1/16-CP
I.MX-P.W.Board			R4038	06S15616Y23	RES,RK JUMPER1/16-CP
I.MX-P.W.Board			R4044	06S15615Y25	RES,RK 101J 1/16 -CP
I.MX-P.W.Board			R4045	06S15615Y25	RES,RK 101J 1/16 -CP
I.MX-P.W.Board			R4046	06S15615Y25	RES,RK 101J 1/16 -CP
I.MX-P.W.Board			R4047	06S15615Y25	RES,RK 101J 1/16 -CP
I.MX-P.W.Board			R4048	06S15615Y25	RES,RK 101J 1/16 -CP
I.MX-P.W.Board			R4049	06S15615Y25	RES,RK 101J 1/16 -CP
I.MX-P.W.Board			R4050	06S15615Y57	RES,RK 222J 1/16 -CP
I.MX-P.W.Board			R4051	06S15615Y57	RES,RK 222J 1/16 -CP
I.MX-P.W.Board			R4052	06S15615Y21	RES,RK 68RJ 1/16 -CP
I.MX-P.W.Board			R4053	06S15615Y25	RES,RK 101J 1/16 -CP
I.MX-P.W.Board			R4054	06S15615Y25	RES,RK 101J 1/16 -CP
I.MX-P.W.Board			R4055	06S15615Y25	RES,RK 101J 1/16 -CP
I.MX-P.W.Board			R4056	06S65415Y85	RES,RK 241F 1/16 -CP

P.W.Board	MIS	MODEL	Ref.	Parts No.	Parts Name
I.MX-P.W.Board			R4058	06S15615Y73	RES,RK 103J 1/16 -CP
I.MX-P.W.Board			R4059	06-02713Z04	RES,RK 102D 1/16 -CP
I.MX-P.W.Board			R4060	06-02713Z04	RES,RK 102D 1/16 -CP
I.MX-P.W.Board			R4061	06S15615Y25	RES,RK 101J 1/16 -CP
I.MX-P.W.Board			R4062	06S15615Y25	RES,RK 101J 1/16 -CP
I.MX-P.W.Board			R4064	06S45675W43	RES,RK JUMPER1/10-CP
I.MX-P.W.Board			R4065	06S15615Y25	RES,RK 101J 1/16 -CP
I.MX-P.W.Board			R4066	06S15615Y49	RES,RK 102J 1/16 -CP
I.MX-P.W.Board			R4068	06S15616Y23	RES,RK JUMPER1/16-CP
I.MX-P.W.Board			R4069	06-25919Z07	RES,RK 243F 1/16 -CP
I.MX-P.W.Board			R4070	06S65415Y55	RES,RK 334F 1/16 -CP
I.MX-P.W.Board			R4071	06S65415Y34	RES,RK 562F 1/16 -CP
I.MX-P.W.Board			R4073	06S45675W43	RES,RK JUMPER1/10-CP
I.MX-P.W.Board			R4074	06S65415Y63	RES,RK 6041F 1/16-CP
I.MX-P.W.Board			R4076	06S15615Y73	RES,RK 103J 1/16 -CP
I.MX-P.W.Board			R4077	06S15615Y73	RES,RK 103J 1/16 -CP
I.MX-P.W.Board			R4079	06S65415Y48	RES,RK 823F 1/16 -CP
I.MX-P.W.Board			R4080	06S65415Y99	RES,RK 512F 1/16 -CP
I.MX-P.W.Board			R4086	06S15615Y73	RES,RK 103J 1/16 -CP
I.MX-P.W.Board			R4087	06S15615Y73	RES,RK 103J 1/16 -CP
I.MX-P.W.Board			R4102	06S15615Y25	RES,RK 101J 1/16 -CP
I.MX-P.W.Board			R4103	06S15615Y25	RES,RK 101J 1/16 -CP
I.MX-P.W.Board			R4104	06S15615Y25	RES,RK 101J 1/16 -CP
I.MX-P.W.Board			R4105	06S15615Y25	RES,RK 101J 1/16 -CP
I.MX-P.W.Board			R4106	06S15615Y25	RES,RK 101J 1/16 -CP
I.MX-P.W.Board			R4108	06S15616Y23	RES,RK JUMPER1/16-CP

P.W.Board	MIS	MODEL	Ref.	Parts No.	Parts Name
I.MX-P.W.Board			R4200	06S65415Y84	RES,RK 201F 1/16 -CP
I.MX-P.W.Board			R4201	06S65415Y25	RES,RK 102F 1/16 -CP
I.MX-P.W.Board			R4202	06S65415Y25	RES,RK 102F 1/16 -CP
I.MX-P.W.Board			R4203	06S65415Y25	RES,RK 102F 1/16 -CP
I.MX-P.W.Board			R4204	06S65415Y25	RES,RK 102F 1/16 -CP
I.MX-P.W.Board			R4205	06S65415Y85	RES,RK 241F 1/16 -CP
I.MX-P.W.Board			R4206	06S65415Y84	RES,RK 201F 1/16 -CP
I.MX-P.W.Board			R4207	06S65415Y25	RES,RK 102F 1/16 -CP
I.MX-P.W.Board			R4208	06S65415Y25	RES,RK 102F 1/16 -CP
I.MX-P.W.Board			R4209	06S65415Y25	RES,RK 102F 1/16 -CP
I.MX-P.W.Board			R4210	06S65415Y25	RES,RK 102F 1/16 -CP
I.MX-P.W.Board			R4211	06S65415Y85	RES,RK 241F 1/16 -CP
I.MX-P.W.Board			R4212	06S65415Y84	RES,RK 201F 1/16 -CP
I.MX-P.W.Board			R4213	06S65415Y25	RES,RK 102F 1/16 -CP
I.MX-P.W.Board			R4214	06S65415Y25	RES,RK 102F 1/16 -CP
I.MX-P.W.Board			R4215	06S65415Y25	RES,RK 102F 1/16 -CP
I.MX-P.W.Board			R4216	06S65415Y25	RES,RK 102F 1/16 -CP
I.MX-P.W.Board			R4217	06S65415Y85	RES,RK 241F 1/16 -CP
I.MX-P.W.Board			R4218	06S65415Y84	RES,RK 201F 1/16 -CP
I.MX-P.W.Board			R4219	06S65415Y25	RES,RK 102F 1/16 -CP
I.MX-P.W.Board			R4220	06S65415Y25	RES,RK 102F 1/16 -CP
I.MX-P.W.Board			R4221	06S65415Y25	RES,RK 102F 1/16 -CP
I.MX-P.W.Board			R4222	06S65415Y25	RES,RK 102F 1/16 -CP
I.MX-P.W.Board			R4223	06S65415Y85	RES,RK 241F 1/16 -CP
I.MX-P.W.Board			R4300	06S15615Y73	RES,RK 103J 1/16 -CP
I.MX-P.W.Board			R4303	06S15615Y73	RES,RK 103J 1/16 -CP

P.W.Board	MIS	MODEL	Ref.	Parts No.	Parts Name
I.MX-P.W.Board			R4304	06S15615Y73	RES,RK 103J 1/16 -CP
I.MX-P.W.Board			R4305	06S15615Y73	RES,RK 103J 1/16 -CP
I.MX-P.W.Board			R4306	06S15615Y73	RES,RK 103J 1/16 -CP
I.MX-P.W.Board			R4307	06S15615Y73	RES,RK 103J 1/16 -CP
I.MX-P.W.Board			R4308	06S15615Y73	RES,RK 103J 1/16 -CP
I.MX-P.W.Board			R4309	06S15615Y73	RES,RK 103J 1/16 -CP
I.MX-P.W.Board			R4310	06S15615Y73	RES,RK 103J 1/16 -CP
I.MX-P.W.Board			R4311	06S15615Y73	RES,RK 103J 1/16 -CP
I.MX-P.W.Board			R4312	06S15615Y73	RES,RK 103J 1/16 -CP
I.MX-P.W.Board			R4314	06S15615Y73	RES,RK 103J 1/16 -CP
I.MX-P.W.Board			R4315	06S15615Y73	RES,RK 103J 1/16 -CP
I.MX-P.W.Board			R4316	06S15615Y73	RES,RK 103J 1/16 -CP
I.MX-P.W.Board			R4317	06S15615Y73	RES,RK 103J 1/16 -CP
I.MX-P.W.Board			R4318	06S15615Y73	RES,RK 103J 1/16 -CP
I.MX-P.W.Board			R4319	06S15615Y73	RES,RK 103J 1/16 -CP
I.MX-P.W.Board			R4320	06S15615Y73	RES,RK 103J 1/16 -CP
I.MX-P.W.Board			R4321	06S15615Y73	RES,RK 103J 1/16 -CP
I.MX-P.W.Board			R4322	06S15615Y73	RES,RK 103J 1/16 -CP
I.MX-P.W.Board			R4323	06S15615Y73	RES,RK 103J 1/16 -CP
I.MX-P.W.Board			R4324	06S15615Y73	RES,RK 103J 1/16 -CP
I.MX-P.W.Board			R4325	06S15615Y73	RES,RK 103J 1/16 -CP
I.MX-P.W.Board			R4326	06S15615Y73	RES,RK 103J 1/16 -CP
I.MX-P.W.Board			R4327	06S15615Y73	RES,RK 103J 1/16 -CP
I.MX-P.W.Board			R4330	06S15615Y73	RES,RK 103J 1/16 -CP
I.MX-P.W.Board			R4331	06S15615Y73	RES,RK 103J 1/16 -CP
I.MX-P.W.Board			R4332	06S15615Y73	RES,RK 103J 1/16 -CP

P.W.Board	MIS	MODEL	Ref.	Parts No.	Parts Name
I.MX-P.W.Board			R4336	06S15615Y73	RES,RK 103J 1/16 -CP
I.MX-P.W.Board			R4337	06S45674W81	RES,RK 103J 1/10 -CP
I.MX-P.W.Board			R4340	06S45674W81	RES,RK 103J 1/10 -CP
I.MX-P.W.Board			R4341	06S45674W81	RES,RK 103J 1/10 -CP
I.MX-P.W.Board			R4400	06S15615Y25	RES,RK 101J 1/16 -CP
I.MX-P.W.Board			R4401	06S15615Y25	RES,RK 101J 1/16 -CP
I.MX-P.W.Board			R4402	06S15615Y25	RES,RK 101J 1/16 -CP
I.MX-P.W.Board			R4403	06S15615Y25	RES,RK 101J 1/16 -CP
I.MX-P.W.Board			R4404	06S15615Y25	RES,RK 101J 1/16 -CP
I.MX-P.W.Board			R4405	06S15615Y25	RES,RK 101J 1/16 -CP
I.MX-P.W.Board			R4406	06S15615Y25	RES,RK 101J 1/16 -CP
I.MX-P.W.Board			R4407	06S15615Y25	RES,RK 101J 1/16 -CP
I.MX-P.W.Board			R4408	06S15615Y25	RES,RK 101J 1/16 -CP
I.MX-P.W.Board			R4409	06S15615Y73	RES,RK 103J 1/16 -CP
I.MX-P.W.Board			R4410	06S15615Y73	RES,RK 103J 1/16 -CP
I.MX-P.W.Board			R4411	06S45675W43	RES,RK JUMPER1/10-CP
I.MX-P.W.Board			R4500	06S15615Y25	RES,RK 101J 1/16 -CP
I.MX-P.W.Board			R4501	06S15615Y73	RES,RK 103J 1/16 -CP
I.MX-P.W.Board			R4601	06S15616Y23	RES,RK JUMPER1/16-CP
I.MX-P.W.Board			R4602	06S15615Y73	RES,RK 103J 1/16 -CP
I.MX-P.W.Board			R4603	06S15615Y73	RES,RK 103J 1/16 -CP
I.MX-P.W.Board			R4604	06S15615Y09	RES,RK 22RJ 1/16 -CP
I.MX-P.W.Board			R4700	06S15615Y73	RES,RK 103J 1/16 -CP
I.MX-P.W.Board			R4701	06S15615Y73	RES,RK 103J 1/16 -CP
I.MX-P.W.Board			R4702	06S65415Y41	RES,RK 223F 1/16 -CP
I.MX-P.W.Board			R4703	06S65415Y41	RES,RK 223F 1/16 -CP

P.W.Board	MIS	MODEL	Ref.	Parts No.	Parts Name
I.MX-P.W.Board			R4706	06S15616Y23	RES,RK JUMPER1/16-CP
I.MX-P.W.Board			R4707	06S15616Y23	RES,RK JUMPER1/16-CP
I.MX-P.W.Board			R5000	06S45675W43	RES,RK JUMPER1/10-CP
I.MX-P.W.Board			R5001	06S15615Y25	RES,RK 101J 1/16 -CP
I.MX-P.W.Board			R5002	06S15615Y25	RES,RK 101J 1/16 -CP
I.MX-P.W.Board			R5003	06S15615Y25	RES,RK 101J 1/16 -CP
I.MX-P.W.Board			R5004	06S15615Y25	RES,RK 101J 1/16 -CP
I.MX-P.W.Board			R5005	06S15615Y25	RES,RK 101J 1/16 -CP
I.MX-P.W.Board			R5006	06S15616Y23	RES,RK JUMPER1/16-CP
I.MX-P.W.Board			R5007	06S15616Y23	RES,RK JUMPER1/16-CP
I.MX-P.W.Board			R5008	06S15616Y23	RES,RK JUMPER1/16-CP
I.MX-P.W.Board			R5009	06S15615Y21	RES,RK 68RJ 1/16 -CP
I.MX-P.W.Board			R5100	06S15615Y81	RES,RK 223J 1/16 -CP
I.MX-P.W.Board			R5101	06S15615Y81	RES,RK 223J 1/16 -CP
I.MX-P.W.Board			R5102	06S15615Y73	RES,RK 103J 1/16 -CP
I.MX-P.W.Board			R5103	06S15615Y81	RES,RK 223J 1/16 -CP
I.MX-P.W.Board			R5104	06S65415Y87	RES,RK 431F 1/16 -CP
I.MX-P.W.Board			R5105	06S65415Y87	RES,RK 431F 1/16 -CP
I.MX-P.W.Board			R5106	06S65415Y06	RES,RK 27RF 1/16 -CP
I.MX-P.W.Board			R5107	06S15615Y25	RES,RK 101J 1/16 -CP
I.MX-P.W.Board			R5108	06S70072F59	RES,CP .182-J-1/4-CP
I.MX-P.W.Board			R5109	06S70072F59	RES,CP .182-J-1/4-CP
I.MX-P.W.Board			R5110	06S15616Y23	RES,RK JUMPER1/16-CP
I.MX-P.W.Board			R5111	06S15616Y23	RES,RK JUMPER1/16-CP
I.MX-P.W.Board			R5112	06S15615Y57	RES,RK 222J 1/16 -CP
I.MX-P.W.Board			R5115	06S15615Y73	RES,RK 103J 1/16 -CP

P.W.Board	MIS	MODEL	Ref.	Parts No.	Parts Name
I.MX-P.W.Board			R5116	06S70072F29	RES,CP .101-J-1/4-CP
I.MX-P.W.Board			R5117	06S70072F29	RES,CP .101-J-1/4-CP
I.MX-P.W.Board			R5119	06S70072F77	RES,CP .103-J-1/4-CP
I.MX-P.W.Board			R5120	06S70072F29	RES,CP .101-J-1/4-CP
I.MX-P.W.Board			R5122	06S15616Y23	RES,RK JUMPER1/16-CP
I.MX-P.W.Board			R5200	06S45675W43	RES,RK JUMPER1/10-CP
I.MX-P.W.Board			R5201	06S45675W43	RES,RK JUMPER1/10-CP
I.MX-P.W.Board			R5202	06S45675W43	RES,RK JUMPER1/10-CP
I.MX-P.W.Board			R5203	06S45675W43	RES,RK JUMPER1/10-CP
I.MX-P.W.Board			R5204	06S45675W43	RES,RK JUMPER1/10-CP
I.MX-P.W.Board			R5205	06S45675W43	RES,RK JUMPER1/10-CP
I.MX-P.W.Board			R5206	06S70072F53	RES,CP .102-J-1/4-CP
I.MX-P.W.Board			R5207	06S70072F29	RES,CP .101-J-1/4-CP
I.MX-P.W.Board			R5208	06S70072F29	RES,CP .101-J-1/4-CP
I.MX-P.W.Board			R5209	06S70072F29	RES,CP .101-J-1/4-CP
I.MX-P.W.Board			R5210	06S15615Y89	RES,RK 473J 1/16 -CP
I.MX-P.W.Board			R5212	06S45675W43	RES,RK JUMPER1/10-CP
I.MX-P.W.Board			R5213	06S65415Y41	RES,RK 223F 1/16 -CP
I.MX-P.W.Board			R5214	06S15615Y83	RES,RK 273J 1/16 -CP
I.MX-P.W.Board			R5216	06S15615Y41	RES,RK 471J 1/16 -CP
I.MX-P.W.Board			R5217	06S15615Y97	RES,RK 104J 1/16 -CP
I.MX-P.W.Board			R5218	06S15615Y89	RES,RK 473J 1/16 -CP
I.MX-P.W.Board			R5219	06S15616Y23	RES,RK JUMPER1/16-CP
I.MX-P.W.Board			R5220	06S15616Y23	RES,RK JUMPER1/16-CP
I.MX-P.W.Board			R5221	06S15616Y23	RES,RK JUMPER1/16-CP
I.MX-P.W.Board			R5222	06S15616Y23	RES,RK JUMPER1/16-CP

P.W.Board	MIS	MODEL	Ref.	Parts No.	Parts Name
I.MX-P.W.Board			R5223	06S15616Y23	RES,RK JUMPER1/16-CP
I.MX-P.W.Board			R5224	06S15616Y23	RES,RK JUMPER1/16-CP
I.MX-P.W.Board			R5225	06S15616Y23	RES,RK JUMPER1/16-CP
I.MX-P.W.Board			R5226	06S15616Y23	RES,RK JUMPER1/16-CP
I.MX-P.W.Board			R5227	06S65415Y33	RES,RK 472F 1/16 -CP
I.MX-P.W.Board			R5228	06S65415Y33	RES,RK 472F 1/16 -CP
I.MX-P.W.Board			R5230	06S15615Y73	RES,RK 103J 1/16 -CP
I.MX-P.W.Board			R5232	06S15615Y73	RES,RK 103J 1/16 -CP
I.MX-P.W.Board			R5233	06S15615Y25	RES,RK 101J 1/16 -CP
I.MX-P.W.Board			R5234	06S15615Y25	RES,RK 101J 1/16 -CP
I.MX-P.W.Board			R5235	06S15615Y25	RES,RK 101J 1/16 -CP
I.MX-P.W.Board			R5236	06S15615Y25	RES,RK 101J 1/16 -CP
I.MX-P.W.Board			R5248	06S65415Y33	RES,RK 472F 1/16 -CP
I.MX-P.W.Board			R5300	06S45675W43	RES,RK JUMPER1/10-CP
I.MX-P.W.Board			R5301	06S45675W43	RES,RK JUMPER1/10-CP
I.MX-P.W.Board			R5302	06S45675W43	RES,RK JUMPER1/10-CP
I.MX-P.W.Board			R5303	06S45675W43	RES,RK JUMPER1/10-CP
I.MX-P.W.Board			R5304	06S45675W43	RES,RK JUMPER1/10-CP
I.MX-P.W.Board			R5305	06S15615Y73	RES,RK 103J 1/16 -CP
I.MX-P.W.Board			R5306	06S15615Y25	RES,RK 101J 1/16 -CP
I.MX-P.W.Board			R5308	06S15615Y73	RES,RK 103J 1/16 -CP
I.MX-P.W.Board			R5309	06S15615Y73	RES,RK 103J 1/16 -CP
I.MX-P.W.Board			R5312	06S15615Y73	RES,RK 103J 1/16 -CP
I.MX-P.W.Board			R5313	06S15616Y22	RES,RK 105J 1/16 -CP
I.MX-P.W.Board			R5314	06S15615Y49	RES,RK 102J 1/16 -CP
I.MX-P.W.Board			R5316	06S15615Y25	RES,RK 101J 1/16 -CP

P.W.Board	MIS	MODEL	Ref.	Parts No.	Parts Name
I.MX-P.W.Board			R5317	06S15615Y25	RES,RK 101J 1/16 -CP
I.MX-P.W.Board			R5318	06S15615Y25	RES,RK 101J 1/16 -CP
I.MX-P.W.Board			R5319	06S15615Y25	RES,RK 101J 1/16 -CP
I.MX-P.W.Board			R5320	06S15615Y25	RES,RK 101J 1/16 -CP
I.MX-P.W.Board			R5321	06S15615Y25	RES,RK 101J 1/16 -CP
I.MX-P.W.Board			R5322	06S15615Y25	RES,RK 101J 1/16 -CP
I.MX-P.W.Board			R5323	06S15615Y25	RES,RK 101J 1/16 -CP
I.MX-P.W.Board			R5324	06S15615Y25	RES,RK 101J 1/16 -CP
I.MX-P.W.Board			R5450	06S15616Y23	RES,RK JUMPER1/16-CP
I.MX-P.W.Board			R5451	06S15616Y23	RES,RK JUMPER1/16-CP
I.MX-P.W.Board			R5452	06S15616Y23	RES,RK JUMPER1/16-CP
I.MX-P.W.Board			R5453	06S15616Y23	RES,RK JUMPER1/16-CP
I.MX-P.W.Board			R5454	06S15616Y23	RES,RK JUMPER1/16-CP
I.MX-P.W.Board			R5455	06S15616Y23	RES,RK JUMPER1/16-CP
I.MX-P.W.Board			R5456	06S15616Y23	RES,RK JUMPER1/16-CP
I.MX-P.W.Board			R5457	06S15616Y23	RES,RK JUMPER1/16-CP
I.MX-P.W.Board			R5458	06S15616Y23	RES,RK JUMPER1/16-CP
I.MX-P.W.Board			R5459	06S15616Y23	RES,RK JUMPER1/16-CP
I.MX-P.W.Board			R5500	06S15615Y09	RES,RK 22RJ 1/16 -CP
I.MX-P.W.Board			R5501	06S15615Y09	RES,RK 22RJ 1/16 -CP
I.MX-P.W.Board			R5502	06S15615Y09	RES,RK 22RJ 1/16 -CP
I.MX-P.W.Board			R5503	06S15615Y09	RES,RK 22RJ 1/16 -CP
I.MX-P.W.Board			R5504	06S15615Y25	RES,RK 101J 1/16 -CP
I.MX-P.W.Board			R5505	06S15615Y25	RES,RK 101J 1/16 -CP
I.MX-P.W.Board			R5506	06S15615Y25	RES,RK 101J 1/16 -CP
I.MX-P.W.Board			R5507	06S15615Y09	RES,RK 22RJ 1/16 -CP

P.W.Board	MIS	MODEL	Ref.	Parts No.	Parts Name
I.MX-P.W.Board			R5508	06S15615Y09	RES,RK 22RJ 1/16 -CP
I.MX-P.W.Board			R5509	06S15615Y09	RES,RK 22RJ 1/16 -CP
I.MX-P.W.Board			R5510	06S15615Y09	RES,RK 22RJ 1/16 -CP
I.MX-P.W.Board			R5511	06S15615Y09	RES,RK 22RJ 1/16 -CP
I.MX-P.W.Board			R5512	06S15615Y09	RES,RK 22RJ 1/16 -CP
I.MX-P.W.Board			R5513	06S15615Y25	RES,RK 101J 1/16 -CP
I.MX-P.W.Board			R5514	06S15615Y09	RES,RK 22RJ 1/16 -CP
I.MX-P.W.Board			R5520	06S45675W43	RES,RK JUMPER1/10-CP
I.MX-P.W.Board			R5521	06S45675W43	RES,RK JUMPER1/10-CP
I.MX-P.W.Board			R5522	06S15615Y09	RES,RK 22RJ 1/16 -CP
I.MX-P.W.Board			R5523	06S15615Y09	RES,RK 22RJ 1/16 -CP
I.MX-P.W.Board			R5524	06S15615Y09	RES,RK 22RJ 1/16 -CP
I.MX-P.W.Board			R5525	06S15615Y09	RES,RK 22RJ 1/16 -CP
I.MX-P.W.Board			R5526	06S15615Y09	RES,RK 22RJ 1/16 -CP
I.MX-P.W.Board			R5527	06S15616Y23	RES,RK JUMPER1/16-CP
I.MX-P.W.Board			R5528	06S15615Y65	RES,RK 472J 1/16 -CP
I.MX-P.W.Board			R5529	06S15615Y49	RES,RK 102J 1/16 -CP
I.MX-P.W.Board			R5530	06S15615Y49	RES,RK 102J 1/16 -CP
I.MX-P.W.Board			R5531	06S15615Y49	RES,RK 102J 1/16 -CP
I.MX-P.W.Board			R5532	06S15615Y65	RES,RK 472J 1/16 -CP
I.MX-P.W.Board			R5533	06S15615Y49	RES,RK 102J 1/16 -CP
I.MX-P.W.Board			R5534	06S15615Y49	RES,RK 102J 1/16 -CP
I.MX-P.W.Board			R5535	06S15615Y65	RES,RK 472J 1/16 -CP
I.MX-P.W.Board			R5536	06S15615Y49	RES,RK 102J 1/16 -CP
I.MX-P.W.Board			R5537	06S15615Y49	RES,RK 102J 1/16 -CP
I.MX-P.W.Board			R5538	06S15615Y65	RES,RK 472J 1/16 -CP

P.W.Board	MIS	MODEL	Ref.	Parts No.	Parts Name
I.MX-P.W.Board			R5539	06S15615Y65	RES,RK 472J 1/16 -CP
I.MX-P.W.Board			R5540	06S15615Y49	RES,RK 102J 1/16 -CP
I.MX-P.W.Board			R5541	06S15615Y65	RES,RK 472J 1/16 -CP
I.MX-P.W.Board			R5600	06S15615Y73	RES,RK 103J 1/16 -CP
I.MX-P.W.Board			R5601	06S15615Y73	RES,RK 103J 1/16 -CP
I.MX-P.W.Board			R5602	06S15615Y73	RES,RK 103J 1/16 -CP
I.MX-P.W.Board			R5603	06S15615Y73	RES,RK 103J 1/16 -CP
I.MX-P.W.Board			R5604	06S15615Y25	RES,RK 101J 1/16 -CP
I.MX-P.W.Board			R5605	06S65415Y47	RES,RK 683F 1/16 -CP
I.MX-P.W.Board			R5606	06S65415Y29	RES,RK 222F 1/16 -CP
I.MX-P.W.Board			R5607	06S65415Y47	RES,RK 683F 1/16 -CP
I.MX-P.W.Board			R5608	06S65415Y33	RES,RK 472F 1/16 -CP
I.MX-P.W.Board			R5609	06S65415Y99	RES,RK 512F 1/16 -CP
I.MX-P.W.Board			R5610	06-25919Z16	RES,RK 134F 1/16 -CP
I.MX-P.W.Board			R5611	06S65415Y47	RES,RK 683F 1/16 -CP
I.MX-P.W.Board			R5612	06S65415Y37	RES,RK 103F 1/16 -CP
I.MX-P.W.Board			R5613	06S65415Y41	RES,RK 223F 1/16 -CP
I.MX-P.W.Board			R5614	06S65415Y17	RES,RK 221F 1/16 -CP
I.MX-P.W.Board			R5617	06S65415Y47	RES,RK 683F 1/16 -CP
I.MX-P.W.Board			R5618	06S65415Y29	RES,RK 222F 1/16 -CP
I.MX-P.W.Board			R5619	06S65415Y47	RES,RK 683F 1/16 -CP
I.MX-P.W.Board			R5620	06S65415Y33	RES,RK 472F 1/16 -CP
I.MX-P.W.Board			R5621	06S65415Y57	RES,RK 474F 1/16 -CP
I.MX-P.W.Board			R5622	06-25919Z13	RES,RK 753F 1/16 -CP
I.MX-P.W.Board			R5623	06S65415Y47	RES,RK 683F 1/16 -CP
I.MX-P.W.Board			R5624	06S65415Y33	RES,RK 472F 1/16 -CP

P.W.Board	MIS	MODEL	Ref.	Parts No.	Parts Name
I.MX-P.W.Board			R5625	06S65415Y47	RES,RK 683F 1/16 -CP
I.MX-P.W.Board			R5627	06S65415Y51	RES,RK 154F 1/16 -CP
I.MX-P.W.Board			R5628	06S65415Y99	RES,RK 512F 1/16 -CP
I.MX-P.W.Board			R5629	06S65415Y41	RES,RK 223F 1/16 -CP
I.MX-P.W.Board			R5630	06S65415Y37	RES,RK 103F 1/16 -CP
I.MX-P.W.Board			R5631	06S65415Y37	RES,RK 103F 1/16 -CP
I.MX-P.W.Board			R5632	06S15615Y41	RES,RK 471J 1/16 -CP
I.MX-P.W.Board			R5633	06S65415Y47	RES,RK 683F 1/16 -CP
I.MX-P.W.Board			R5634	06S65415Y30	RES,RK 272F 1/16 -CP
I.MX-P.W.Board			R5635	06S65415Y41	RES,RK 223F 1/16 -CP
I.MX-P.W.Board			R5636	06S15615Y41	RES,RK 471J 1/16 -CP
I.MX-P.W.Board			R5637	06S65415Y47	RES,RK 683F 1/16 -CP
I.MX-P.W.Board			R5638	06S65415Y66	RES,RK 622F 1/16 -CP
I.MX-P.W.Board			R5639	06S65415Y47	RES,RK 683F 1/16 -CP
I.MX-P.W.Board			R5640	06S15615Y41	RES,RK 471J 1/16 -CP
I.MX-P.W.Board			R5641	06S65415Y35	RES,RK 682F 1/16 -CP
I.MX-P.W.Board			R5642	06S65415Y44	RES,RK 393F 1/16 -CP
I.MX-P.W.Board			R5643	06S65415Y53	RES,RK 224F 1/16 -CP
I.MX-P.W.Board			R5644	06-25919Z13	RES,RK 753F 1/16 -CP
I.MX-P.W.Board			R5645	06S15615Y41	RES,RK 471J 1/16 -CP
I.MX-P.W.Board			R5646	06S15615Y41	RES,RK 471J 1/16 -CP
I.MX-P.W.Board			R5647	06S15615Y41	RES,RK 471J 1/16 -CP
I.MX-P.W.Board			R5648	06S15616Y23	RES,RK JUMPER1/16-CP
I.MX-P.W.Board			R5650	06S15615Y25	RES,RK 101J 1/16 -CP
I.MX-P.W.Board			R5651	06S15615Y67	RES,RK 562J 1/16 -CP
I.MX-P.W.Board			R5652	06S65415Y31	RES,RK 332F 1/16 -CP

P.W.Board	MIS	MODEL	Ref.	Parts No.	Parts Name
I.MX-P.W.Board			R5653	06S65415Y26	RES,RK 122F 1/16 -CP
I.MX-P.W.Board			R5654	06S65415Y38	RES,RK 123F 1/16 -CP
I.MX-P.W.Board			R5655	06S65415Y42	RES,RK 273F 1/16 -CP
I.MX-P.W.Board			R5657	06S15616Y23	RES,RK JUMPER1/16-CP
I.MX-P.W.Board			R5658	06-25919Z15	RES,RK 114F 1/16 -CP
I.MX-P.W.Board			R5659	06S65415Y99	RES,RK 512F 1/16 -CP
I.MX-P.W.Board			R5680	06S15615Y49	RES,RK 102J 1/16 -CP
I.MX-P.W.Board			R5700	06S15615Y73	RES,RK 103J 1/16 -CP
I.MX-P.W.Board			R5701	06S15616Y23	RES,RK JUMPER1/16-CP
I.MX-P.W.Board			R5702	06S15616Y23	RES,RK JUMPER1/16-CP
I.MX-P.W.Board			R5704	06S15615Y73	RES,RK 103J 1/16 -CP
I.MX-P.W.Board			R5706	06S15615Y73	RES,RK 103J 1/16 -CP
I.MX-P.W.Board			R5707	06S15615Y73	RES,RK 103J 1/16 -CP
I.MX-P.W.Board			R5708	06S65415Y46	RES,RK 563F 1/16 -CP
I.MX-P.W.Board			R5710	06S15616Y23	RES,RK JUMPER1/16-CP
I.MX-P.W.Board			R5712	06S45675W43	RES,RK JUMPER1/10-CP
I.MX-P.W.Board			R5713	06-12176Z01	RES,RK R10F 1/5 -CP
I.MX-P.W.Board			R5714	06-12176Z01	RES,RK R10F 1/5 -CP
I.MX-P.W.Board			R5715	06S65415Y30	RES,RK 272F 1/16 -CP
I.MX-P.W.Board			R5716	06S65415Y17	RES,RK 221F 1/16 -CP
I.MX-P.W.Board			R5717	06S65415Y32	RES,RK 392F 1/16 -CP
I.MX-P.W.Board			R5718	06S65415Y17	RES,RK 221F 1/16 -CP
I.MX-P.W.Board			R5719	06S45675W43	RES,RK JUMPER1/10-CP
I.MX-P.W.Board			R5721	06S15616Y23	RES,RK JUMPER1/16-CP
I.MX-P.W.Board			R5722	06S15616Y23	RES,RK JUMPER1/16-CP
I.MX-P.W.Board			R5798	06S15615Y73	RES,RK 103J 1/16 -CP

P.W.Board	MIS	MODEL	Ref.	Parts No.	Parts Name
I.MX-P.W.Board			R5800	06S65415Y43	RES,RK 333F 1/16 -CP
I.MX-P.W.Board			R5801	06S65415Y39	RES,RK 153F 1/16 -CP
I.MX-P.W.Board			R5802	06S65415Y35	RES,RK 682F 1/16 -CP
I.MX-P.W.Board			R5803	06S15615Y73	RES,RK 103J 1/16 -CP
I.MX-P.W.Board			R5804	06S15594Y14	RES,RK 474F 1/10 -CP
I.MX-P.W.Board			R5805	06S15593Y92	RES,RK 623F 1/10 -CP
I.MX-P.W.Board			R5806	06S45674W81	RES,RK 103J 1/10 -CP
I.MX-P.W.Board			R5807	06S70072F77	RES,CP .103-J-1/4-CP
I.MX-P.W.Board			R5808	06S15616Y23	RES,RK JUMPER1/16-CP
I.MX-P.W.Board			R5809	06S15616Y23	RES,RK JUMPER1/16-CP
I.MX-P.W.Board			R5810	06S15593Y67	RES,RK 562F 1/10 -CP
I.MX-P.W.Board			R5811	06S15593Y98	RES,RK 114F 1/10 -CP
I.MX-P.W.Board			R6012	06S65415Y38	RES,RK 123F 1/16 -CP
I.MX-P.W.Board			R6013	06S65415Y30	RES,RK 272F 1/16 -CP
I.MX-P.W.Board			R6014	06S65415Y33	RES,RK 472F 1/16 -CP
I.MX-P.W.Board			R6015	06S15593Y93	RES,RK 683F 1/10 -CP
I.MX-P.W.Board			R6016	06S15594Y09	RES,RK 304F 1/10 -CP
I.MX-P.W.Board			R6029	06S15616Y23	RES,RK JUMPER1/16-CP
I.MX-P.W.Board			R6104	06S15615Y57	RES,RK 222J 1/16 -CP
I.MX-P.W.Board			R6115	06S15615Y25	RES,RK 101J 1/16 -CP
I.MX-P.W.Board			R6225	06S15615Y73	RES,RK 103J 1/16 -CP
I.MX-P.W.Board			R6226	06S15615Y25	RES,RK 101J 1/16 -CP
I.MX-P.W.Board			R6303	06S15615Y65	RES,RK 472J 1/16 -CP
I.MX-P.W.Board			R6304	06S15615Y09	RES,RK 22RJ 1/16 -CP
I.MX-P.W.Board			R6305	06S15615Y09	RES,RK 22RJ 1/16 -CP
I.MX-P.W.Board			R6308	06S15616Y23	RES,RK JUMPER1/16-CP

P.W.Board	MIS	MODEL	Ref.	Parts No.	Parts Name
I.MX-P.W.Board			R6309	06S15615Y09	RES,RK 22RJ 1/16 -CP
I.MX-P.W.Board			R6310	06S15616Y23	RES,RK JUMPER1/16-CP
I.MX-P.W.Board			R6311	06S15616Y23	RES,RK JUMPER1/16-CP
I.MX-P.W.Board			R6401	06S70072F41	RES,CP .331-J-1/4-CP
I.MX-P.W.Board			R6402	06S35083Y86	RES,RK 75RF 1/4 -CP
I.MX-P.W.Board			R6403	06S45674W57	RES,RK 102J 1/10 -CP
I.MX-P.W.Board			R6404	06S45674W57	RES,RK 102J 1/10 -CP
I.MX-P.W.Board			R6406	06S70072F41	RES,CP .331-J-1/4-CP
I.MX-P.W.Board			R6407	06S35083Y86	RES,RK 75RF 1/4 -CP
I.MX-P.W.Board			R6408	06S45674W57	RES,RK 102J 1/10 -CP
I.MX-P.W.Board			R6409	06S45674W57	RES,RK 102J 1/10 -CP
I.MX-P.W.Board			R6410	06S15615Y25	RES,RK 101J 1/16 -CP
I.MX-P.W.Board			R6411	06S45674W81	RES,RK 103J 1/10 -CP
I.MX-P.W.Board			R6412	06S45674W73	RES,RK 472J 1/10 -CP
I.MX-P.W.Board			R6413	06S45674W93	RES,RK 333J 1/10 -CP
I.MX-P.W.Board			R6414	06S15615Y09	RES,RK 22RJ 1/16 -CP
I.MX-P.W.Board			R6415	06S15615Y81	RES,RK 223J 1/16 -CP
I.MX-P.W.Board			R6416	06S15615Y73	RES,RK 103J 1/16 -CP
I.MX-P.W.Board			R6418	06S70072F29	RES,CP .101-J-1/4-CP
I.MX-P.W.Board			R6419	06S70072F69	RES,CP .472-J-1/4-CP
I.MX-P.W.Board			R6420	06S45674W57	RES,RK 102J 1/10 -CP
I.MX-P.W.Board			R6421	06S70072F53	RES,CP .102-J-1/4-CP
I.MX-P.W.Board			R6422	06S70072F53	RES,CP .102-J-1/4-CP
I.MX-P.W.Board			R6423	06S70072F29	RES,CP .101-J-1/4-CP
I.MX-P.W.Board			R6424	06S70072F53	RES,CP .102-J-1/4-CP
I.MX-P.W.Board			R6425	06S70072F53	RES,CP .102-J-1/4-CP

P.W.Board	MIS	MODEL	Ref.	Parts No.	Parts Name
I.MX-P.W.Board			R6426	06S70072F53	RES,CP .102-J-1/4-CP
I.MX-P.W.Board			R6427	06S70072F53	RES,CP .102-J-1/4-CP
I.MX-P.W.Board			R6428	06S15615Y73	RES,RK 103J 1/16 -CP
I.MX-P.W.Board			R6431	06S15616Y23	RES,RK JUMPER1/16-CP
I.MX-P.W.Board			R6432	06S15615Y25	RES,RK 101J 1/16 -CP
I.MX-P.W.Board			R6433	06S15615Y25	RES,RK 101J 1/16 -CP
I.MX-P.W.Board			R6434	06S15616Y23	RES,RK JUMPER1/16-CP
I.MX-P.W.Board			R6440	06S15615Y09	RES,RK 22RJ 1/16 -CP
I.MX-P.W.Board			R6443	06S70072F29	RES,CP .101-J-1/4-CP
I.MX-P.W.Board			R6444	06S70072F53	RES,CP .102-J-1/4-CP
I.MX-P.W.Board			RA4000	06S15771Y13	RES,ARYEXB28V101J-CP
I.MX-P.W.Board			RA4001	06S15771Y13	RES,ARYEXB28V101J-CP
I.MX-P.W.Board			RA4002	06S15771Y13	RES,ARYEXB28V101J-CP
I.MX-P.W.Board			RA4003	06S15771Y13	RES,ARYEXB28V101J-CP
I.MX-P.W.Board			RA4004	06S15771Y13	RES,ARYEXB28V101J-CP
I.MX-P.W.Board			RA4005	06S15771Y13	RES,ARYEXB28V101J-CP
I.MX-P.W.Board			RA4006	06S15771Y13	RES,ARYEXB28V101J-CP
I.MX-P.W.Board			RA4007	06S15771Y13	RES,ARYEXB28V101J-CP
I.MX-P.W.Board			RA4008	06S15771Y13	RES,ARYEXB28V101J-CP
I.MX-P.W.Board			RA4009	06S15771Y13	RES,ARYEXB28V101J-CP
I.MX-P.W.Board			SD5650	48-19296Z01	DIO,SHT RB056L-40-E1
I.MX-P.W.Board			SD5700	48-19296Z01	DIO,SHT RB056L-40-E1
I.MX-P.W.Board			SD5800	48-06526Z01	DIO,SHT RSX051VA30CP
I.MX-P.W.Board			SK5700	09-34073Z01	SKT,48204-0001 -DB
I.MX-P.W.Board			TML5400	29-22483Z02	OG-453065 -E5
I.MX-P.W.Board			TML6300	29-22483Z02	OG-453065 -E5

P.W.Board	MIS	MODEL	Ref.	Parts No.	Parts Name
I.MX-P.W.Board			XL4000	91-26661Z36	XTL,NX3225SAAG24.0CP
I.MX-P.W.Board			XL4001	91-26198Z03	XTL,NX3215 32.7NS-E1
I.MX-P.W.Board			XL5200	91-26661Z32	XTL,NX3225SAAG28.6CP
I.MX-P.W.Board			XL5300	91-26661Z24	XTL,NX3225SAAG25.0CP
I.MX-P.W.Board			XL6401	91-16024Z01	XTL,AT-41CD2 3.98-E9
I.MX-P.W.Board			ZD5100	48-28494Z01	DIO,ZEN ECMF04-4H-CP
I.MX-P.W.Board			ZD5101	48-28494Z01	DIO,ZEN ECMF04-4H-CP
I.MX-P.W.Board			ZD5200	48-28494Z01	DIO,ZEN ECMF04-4H-CP
I.MX-P.W.Board			ZD5201	48-28494Z01	DIO,ZEN ECMF04-4H-CP
I.MX-P.W.Board			ZD5202	48-16145Z20	DIO,ZEN PZU5.1B3 -CP
I.MX-P.W.Board			ZD5203	48-25907Z01	DIO,ZEN PESD5V0F1-CP
I.MX-P.W.Board			ZD5204	48-25907Z01	DIO,ZEN PESD5V0F1-CP
I.MX-P.W.Board			ZD5205	48-25907Z01	DIO,ZEN PESD5V0F1-CP
I.MX-P.W.Board			ZD5206	48-25907Z01	DIO,ZEN PESD5V0F1-CP
I.MX-P.W.Board			ZD6402	48-16145Z22	DIO,ZEN PZU5.6B2 -CP
I.MX-P.W.Board			ZD6403	48-16145Z22	DIO,ZEN PZU5.6B2 -CP
DISPLAY-P.W.Board			C7000	08S45232Y02	CAP,CER 331K-B1H -CP
DISPLAY-P.W.Board			C7001	08S65669Y03	CAP,CER 224KX7R1H-CP
DISPLAY-P.W.Board			C7003	08S35350Y04	CAP,CER 105K-B1C -CP
DISPLAY-P.W.Board			C7004	08S45232Y05	CAP,CER 102K-B1H -CP
DISPLAY-P.W.Board			C7005	08S65670Y08	CAP,CER 225KX5R1H-CP
DISPLAY-P.W.Board			C7006	08S65670Y07	CAP,CER 105KX5R1H-CP
DISPLAY-P.W.Board			C7008	08S45232Y08	CAP,CER 332K-B1H -CP
DISPLAY-P.W.Board			C7009	08S45232Y07	CAP,CER 222K-B1H -CP
DISPLAY-P.W.Board			C7010	08S45232Y07	CAP,CER 222K-B1H -CP
DISPLAY-P.W.Board			C7011	08S45232Y07	CAP,CER 222K-B1H -CP

P.W.Board	MIS	MODEL	Ref.	Parts No.	Parts Name
DISPLAY-P.W.Board			C7012	08S45231Y25	CAP,CER 101J-CH1H-CP
DISPLAY-P.W.Board			C7013	08S65676Y09	CAP,CER 475KX7R1H-CP
DISPLAY-P.W.Board			C7014	08S65670Y07	CAP,CER 105KX5R1H-CP
DISPLAY-P.W.Board			C7015	08S65670Y07	CAP,CER 105KX5R1H-CP
DISPLAY-P.W.Board			C7016	08S45232Y05	CAP,CER 102K-B1H -CP
DISPLAY-P.W.Board			C7017	08S45232Y13	CAP,CER 223K-B1C -CP
DISPLAY-P.W.Board			C7018	08S65670Y08	CAP,CER 225KX5R1H-CP
DISPLAY-P.W.Board			C7019	08S65669Y03	CAP,CER 224KX7R1H-CP
DISPLAY-P.W.Board			C7020	08S65669Y03	CAP,CER 224KX7R1H-CP
DISPLAY-P.W.Board			C7021	08S65669Y03	CAP,CER 224KX7R1H-CP
DISPLAY-P.W.Board			C7022	08-31895Z01	CAP,CER 226MX7S1C-CP
DISPLAY-P.W.Board			C7023	08S65669Y03	CAP,CER 224KX7R1H-CP
DISPLAY-P.W.Board			C7024	08S45676W73	CAP,CER.103K-B1H -CP
DISPLAY-P.W.Board			C7025	08S65669Y03	CAP,CER 224KX7R1H-CP
DISPLAY-P.W.Board			C7026	08S65670Y06	CAP,CER 226KX5R1A-CP
DISPLAY-P.W.Board			C7027	08S65669Y03	CAP,CER 224KX7R1H-CP
DISPLAY-P.W.Board			C7028	08S65669Y03	CAP,CER 224KX7R1H-CP
DISPLAY-P.W.Board			C7029	08-31895Z01	CAP,CER 226MX7S1C-CP
DISPLAY-P.W.Board			C7030	08S65670Y09	CAP,CER 106KX5R1E-CP
DISPLAY-P.W.Board			C7031	08S45231Y24	CAP,CER 82RJ-CH1H-CP
DISPLAY-P.W.Board			C7032	08S65669Y03	CAP,CER 224KX7R1H-CP
DISPLAY-P.W.Board			C7033	08S45231Y32	CAP,CER 391J-CH1H-CP
DISPLAY-P.W.Board			C7034	08S65669Y03	CAP,CER 224KX7R1H-CP
DISPLAY-P.W.Board			C7035	08S65669Y03	CAP,CER 224KX7R1H-CP
DISPLAY-P.W.Board			C7036	08S35349Y21	CAP,CER 104K-B1H -CP
DISPLAY-P.W.Board			C7037	08S45676W83	CAP,CER 473K-B1C -CP

P.W.Board	MIS	MODEL	Ref.	Parts No.	Parts Name
DISPLAY-P.W.Board			C7038	08S65669Y03	CAP,CER 224KX7R1H-CP
DISPLAY-P.W.Board			C7040	08S65670Y07	CAP,CER 105KX5R1H-CP
DISPLAY-P.W.Board			C7041	08S65670Y07	CAP,CER 105KX5R1H-CP
DISPLAY-P.W.Board			C7042	08S65670Y07	CAP,CER 105KX5R1H-CP
DISPLAY-P.W.Board			C7043	08S65669Y03	CAP,CER 224KX7R1H-CP
DISPLAY-P.W.Board			C7044	08S65670Y01	CAP,CER 106KX5R1C-CP
DISPLAY-P.W.Board			C7046	08S65669Y03	CAP,CER 224KX7R1H-CP
DISPLAY-P.W.Board			C7047	08S65670Y07	CAP,CER 105KX5R1H-CP
DISPLAY-P.W.Board			C7048	08S65670Y07	CAP,CER 105KX5R1H-CP
DISPLAY-P.W.Board			C7049	08S65670Y06	CAP,CER 226KX5R1A-CP
DISPLAY-P.W.Board			C7050	08S45232Y08	CAP,CER 332K-B1H -CP
DISPLAY-P.W.Board			C7051	08S65669Y03	CAP,CER 224KX7R1H-CP
DISPLAY-P.W.Board			C7052	08S45232Y18	CAP,CER 392K-B1H -CP
DISPLAY-P.W.Board			C7053	08S45231Y25	CAP,CER 101J-CH1H-CP
DISPLAY-P.W.Board			C7055	08S65676Y09	CAP,CER 475KX7R1H-CP
DISPLAY-P.W.Board			C7057	08S65669Y03	CAP,CER 224KX7R1H-CP
DISPLAY-P.W.Board			C7058	08S65670Y01	CAP,CER 106KX5R1C-CP
DISPLAY-P.W.Board			C7060	08S65669Y03	CAP,CER 224KX7R1H-CP
DISPLAY-P.W.Board			C7061	08S65669Y03	CAP,CER 224KX7R1H-CP
DISPLAY-P.W.Board			C7062	08-31895Z01	CAP,CER 226MX7S1C-CP
DISPLAY-P.W.Board			C7064	08S65676Y01	CAP,CER 335KX7R1A-CP
DISPLAY-P.W.Board			C7065	08S65676Y02	CAP,CER 475KX7R1A-CP
DISPLAY-P.W.Board			C7066	08-31895Z01	CAP,CER 226MX7S1C-CP
DISPLAY-P.W.Board			C7069	08S65669Y03	CAP,CER 224KX7R1H-CP
DISPLAY-P.W.Board			C7070	08S65669Y03	CAP,CER 224KX7R1H-CP
DISPLAY-P.W.Board			C7071	08S65669Y03	CAP,CER 224KX7R1H-CP

P.W.Board	MIS	MODEL	Ref.	Parts No.	Parts Name
DISPLAY-P.W.Board			C7072	08S65669Y03	CAP,CER 224KX7R1H-CP
DISPLAY-P.W.Board			C7073	08S65669Y03	CAP,CER 224KX7R1H-CP
DISPLAY-P.W.Board			C7074	08S65669Y03	CAP,CER 224KX7R1H-CP
DISPLAY-P.W.Board			C7075	08S65670Y01	CAP,CER 106KX5R1C-CP
DISPLAY-P.W.Board			C7076	08-31895Z01	CAP,CER 226MX7S1C-CP
DISPLAY-P.W.Board			C7080	08S65676Y09	CAP,CER 475KX7R1H-CP
DISPLAY-P.W.Board			C7081	08S65676Y09	CAP,CER 475KX7R1H-CP
DISPLAY-P.W.Board			C7082	08S65676Y09	CAP,CER 475KX7R1H-CP
DISPLAY-P.W.Board			C7083	08S65676Y09	CAP,CER 475KX7R1H-CP
DISPLAY-P.W.Board			C7201	08-15113Z01	CAP,CER 225KX7R1C-CP
DISPLAY-P.W.Board			C7203	08S45232Y13	CAP,CER 223K-B1C -CP
DISPLAY-P.W.Board			C7204	08S45231Y13	CAP,CER 10RD-CH1H-CP
DISPLAY-P.W.Board			C7205	08S45231Y25	CAP,CER 101J-CH1H-CP
DISPLAY-P.W.Board			C7206	08S45232Y21	CAP,CER 104K-B1A-CP
DISPLAY-P.W.Board			C7207	08S35350Y04	CAP,CER 105K-B1C -CP
DISPLAY-P.W.Board			C7208	08S65669Y03	CAP,CER 224KX7R1H-CP
DISPLAY-P.W.Board			C7212	08S65669Y03	CAP,CER 224KX7R1H-CP
DISPLAY-P.W.Board			C7213	08S35350Y04	CAP,CER 105K-B1C -CP
DISPLAY-P.W.Board			C7215	08S45232Y17	CAP,CER 104K-B0J -CP
DISPLAY-P.W.Board			C7403	08S65668Y05	CAP,CER 224KX5R1A-CP
DISPLAY-P.W.Board			C7404	08S35374W12	CAP,CER 106K-B0J -CP
DISPLAY-P.W.Board			C7405	08S65668Y05	CAP,CER 224KX5R1A-CP
DISPLAY-P.W.Board			C7406	08S35374W12	CAP,CER 106K-B0J -CP
DISPLAY-P.W.Board			C7407	08S45232Y17	CAP,CER 104K-B0J -CP
DISPLAY-P.W.Board			C7408	08S45232Y17	CAP,CER 104K-B0J -CP
DISPLAY-P.W.Board			C7409	08S45232Y17	CAP,CER 104K-B0J -CP

P.W.Board	MIS	MODEL	Ref.	Parts No.	Parts Name
DISPLAY-P.W.Board			C7410	08S45232Y17	CAP,CER 104K-B0J -CP
DISPLAY-P.W.Board			C7411	08S45232Y17	CAP,CER 104K-B0J -CP
DISPLAY-P.W.Board			C7412	08S65668Y05	CAP,CER 224KX5R1A-CP
DISPLAY-P.W.Board			C7413	08S65668Y05	CAP,CER 224KX5R1A-CP
DISPLAY-P.W.Board			C7418	08S45231Y11	CAP,CER 8R0D-CH1H-CP
DISPLAY-P.W.Board			C7419	08S45231Y11	CAP,CER 8R0D-CH1H-CP
DISPLAY-P.W.Board			C7420	08S45232Y17	CAP,CER 104K-B0J -CP
DISPLAY-P.W.Board			C7421	08S45232Y17	CAP,CER 104K-B0J -CP
DISPLAY-P.W.Board			C7422	08S45232Y17	CAP,CER 104K-B0J -CP
DISPLAY-P.W.Board			C7423	08S45232Y17	CAP,CER 104K-B0J -CP
DISPLAY-P.W.Board			C7424	08S45232Y17	CAP,CER 104K-B0J -CP
DISPLAY-P.W.Board			C7434	08S35374W12	CAP,CER 106K-B0J -CP
DISPLAY-P.W.Board			C7435	08S35374W12	CAP,CER 106K-B0J -CP
DISPLAY-P.W.Board			C7481	08S45231Y23	CAP,CER 68RJ-CH1H-CP
DISPLAY-P.W.Board			C7486	08S45231Y23	CAP,CER 68RJ-CH1H-CP
DISPLAY-P.W.Board			C7490	08S65668Y05	CAP,CER 224KX5R1A-CP
DISPLAY-P.W.Board			C7500	08S65669Y03	CAP,CER 224KX7R1H-CP
DISPLAY-P.W.Board			C7501	08S65669Y03	CAP,CER 224KX7R1H-CP
DISPLAY-P.W.Board			C7502	08S65669Y03	CAP,CER 224KX7R1H-CP
DISPLAY-P.W.Board			C7503	08S65669Y03	CAP,CER 224KX7R1H-CP
DISPLAY-P.W.Board			C7505	08S45231Y38	CAP,CER 102J-CH1H-CP
DISPLAY-P.W.Board			C7506	08S45231Y38	CAP,CER 102J-CH1H-CP
DISPLAY-P.W.Board			C7508	08S45676W85	CAP,CER 104K-B1C -CP
DISPLAY-P.W.Board			C7509	08S45676W85	CAP,CER 104K-B1C -CP
DISPLAY-P.W.Board			C7510	08S45676W85	CAP,CER 104K-B1C -CP
DISPLAY-P.W.Board			C7511	08S45676W85	CAP,CER 104K-B1C -CP

P.W.Board	MIS	MODEL	Ref.	Parts No.	Parts Name
DISPLAY-P.W.Board			C7512	08S45676W85	CAP,CER 104K-B1C -CP
DISPLAY-P.W.Board			C7513	08S45676W85	CAP,CER 104K-B1C -CP
DISPLAY-P.W.Board			C7514	08S45676W85	CAP,CER 104K-B1C -CP
DISPLAY-P.W.Board			C7515	08S45676W85	CAP,CER 104K-B1C -CP
DISPLAY-P.W.Board			C7516	08S45676W85	CAP,CER 104K-B1C -CP
DISPLAY-P.W.Board			C7517	08S45676W85	CAP,CER 104K-B1C -CP
DISPLAY-P.W.Board			C7521	08S45232Y04	CAP,CER 681K-B1H -CP
DISPLAY-P.W.Board			C7522	08S45231Y17	CAP,CER 22RJ-CH1H-CP
DISPLAY-P.W.Board			C7523	08S45231Y17	CAP,CER 22RJ-CH1H-CP
DISPLAY-P.W.Board			C7524	08S45231Y17	CAP,CER 22RJ-CH1H-CP
DISPLAY-P.W.Board			C7525	08S45231Y17	CAP,CER 22RJ-CH1H-CP
DISPLAY-P.W.Board			C7526	08S45231Y17	CAP,CER 22RJ-CH1H-CP
DISPLAY-P.W.Board			C7527	08S45231Y17	CAP,CER 22RJ-CH1H-CP
DISPLAY-P.W.Board			C7528	08S45231Y17	CAP,CER 22RJ-CH1H-CP
DISPLAY-P.W.Board			C7529	08S45231Y17	CAP,CER 22RJ-CH1H-CP
DISPLAY-P.W.Board			C7530	08S45231Y17	CAP,CER 22RJ-CH1H-CP
DISPLAY-P.W.Board			C7531	08S45231Y17	CAP,CER 22RJ-CH1H-CP
DISPLAY-P.W.Board			C7532	08S45231Y17	CAP,CER 22RJ-CH1H-CP
DISPLAY-P.W.Board			C7533	08S45231Y17	CAP,CER 22RJ-CH1H-CP
DISPLAY-P.W.Board			C7534	08S45231Y17	CAP,CER 22RJ-CH1H-CP
DISPLAY-P.W.Board			C7535	08S45231Y17	CAP,CER 22RJ-CH1H-CP
DISPLAY-P.W.Board			C7536	08S45231Y17	CAP,CER 22RJ-CH1H-CP
DISPLAY-P.W.Board			C7537	08S45231Y17	CAP,CER 22RJ-CH1H-CP
DISPLAY-P.W.Board			C7538	08S45231Y17	CAP,CER 22RJ-CH1H-CP
DISPLAY-P.W.Board			C7539	08S45231Y17	CAP,CER 22RJ-CH1H-CP
DISPLAY-P.W.Board			C7601	08S45676W85	CAP,CER 104K-B1C -CP

P.W.Board	MIS	MODEL	Ref.	Parts No.	Parts Name
DISPLAY-P.W.Board			C7602	08S45676W85	CAP,CER 104K-B1C -CP
DISPLAY-P.W.Board			C7603	08S45676W85	CAP,CER 104K-B1C -CP
DISPLAY-P.W.Board			C7604	08S35374W12	CAP,CER 106K-B0J -CP
DISPLAY-P.W.Board			C7605	08S45676W85	CAP,CER 104K-B1C -CP
DISPLAY-P.W.Board			C7606	08S45676W85	CAP,CER 104K-B1C -CP
DISPLAY-P.W.Board			C7607	08S65667Y05	CAP,CER 105KX5R1A-CP
DISPLAY-P.W.Board			C7608	08S45676W85	CAP,CER 104K-B1C -CP
DISPLAY-P.W.Board			C7609	08S45676W85	CAP,CER 104K-B1C -CP
DISPLAY-P.W.Board			C7610	08S45676W85	CAP,CER 104K-B1C -CP
DISPLAY-P.W.Board			C7611	08S45676W85	CAP,CER 104K-B1C -CP
DISPLAY-P.W.Board			C7612	08S45231Y20	CAP,CER 39RJ-CH1H-CP
DISPLAY-P.W.Board			C7613	08S45231Y20	CAP,CER 39RJ-CH1H-CP
DISPLAY-P.W.Board			C7614	08S45231Y20	CAP,CER 39RJ-CH1H-CP
DISPLAY-P.W.Board			C7615	08S45231Y20	CAP,CER 39RJ-CH1H-CP
DISPLAY-P.W.Board			C7616	08S45232Y11	CAP,CER 103K-B1C -CP
DISPLAY-P.W.Board			C7617	08S65667Y05	CAP,CER 105KX5R1A-CP
DISPLAY-P.W.Board			C7618	08S65667Y05	CAP,CER 105KX5R1A-CP
DISPLAY-P.W.Board			CB7000	09-05352Z05	FFC,52271-0869 -E9
DISPLAY-P.W.Board			CB7200	09-29915Z03	FFC,40FHH-SM1-GAN-EQ
DISPLAY-P.W.Board			CB7201	09-23546Z02	FFC,FH52-50S-0.5SHEQ
DISPLAY-P.W.Board			CB7500	09-16224Z03	FFC,FH28-60S-0.5SHEZ
DISPLAY-P.W.Board			CB7601	09-29915Z05	FFC,60FHH-SM1-GAN-EZ
DISPLAY-P.W.Board			CB7602	09-05384Z06	FFC,52745-1097 -E9
DISPLAY-P.W.Board			D7000	48-19711Z01	DIO,BAV99W -CP
DISPLAY-P.W.Board			E7000	23-31100Z18	CAP,MAK 22R-1E -E6
DISPLAY-P.W.Board			E7001	23-31100Z19	CAP,MAK 33R-1E -E6

P.W.Board	MIS	MODEL	Ref.	Parts No.	Parts Name
DISPLAY-P.W.Board			E7002	23-31100Z19	CAP,MAK 33R-1E -E6
DISPLAY-P.W.Board			E7003	23T75543Y07	CAP,MVA 47R-1CE55-E3
DISPLAY-P.W.Board			E7004	23-31100Z19	CAP,MAK 33R-1E -E6
DISPLAY-P.W.Board			E7006	23T75543Y13	CAP,MVA 22R-1EE55-E3
DISPLAY-P.W.Board			E7009	23-31100Z19	CAP,MAK 33R-1E -E6
DISPLAY-P.W.Board			E7011	23T75543Y08	CAP,MVA 101-1CF55-E6
DISPLAY-P.W.Board			E7013	23-31100Z19	CAP,MAK 33R-1E -E6
DISPLAY-P.W.Board			E7200	23-02558Z03	CAP,ZT 47R-0J -E3
DISPLAY-P.W.Board			E7210	23-31100Z18	CAP,MAK 22R-1E -E6
DISPLAY-P.W.Board			IC7000	51-25969Z01	MAX16813ATP/V+T -LE2
DISPLAY-P.W.Board			IC7001	51T65666Y03	NJM2880U1-05-TE1-NE2
DISPLAY-P.W.Board			IC7002	51-20182Z01	BU25TD3WG-TR -CP
DISPLAY-P.W.Board			IC7003	51-14365Z01	LT1946AEMS8E -SE2
DISPLAY-P.W.Board			IC7004	51-05314Z01	BA4560RFVM-TR -SE1
DISPLAY-P.W.Board			IC7005	51-28614Z01	BD00FC0EEFJ-ME2 -SE2
DISPLAY-P.W.Board			IC7006	51-28779Z01	BD90620EFJ-CE2 -SE2
DISPLAY-P.W.Board			IC7007	51-23593Z01	BD00HC5WEFJ-ME2 -SE2
DISPLAY-P.W.Board			IC7008	51T95150W01	NJM78M05DLA-TE1 -NE5
DISPLAY-P.W.Board			IC7009	51-23593Z01	BD00HC5WEFJ-ME2 -SE2
DISPLAY-P.W.Board			IC7200	51T15647Y01	NJM4558V-TE2 -SE2
DISPLAY-P.W.Board			IC7201	51-19188Z01	NJU6062V-TE1 -SE2
DISPLAY-P.W.Board			IC7400	51-29348Z01	TW8834AT-TA2-GR -QT
DISPLAY-P.W.Board			IC7401	51T85276W03	TC7WH74FK,LJ(CB -CP
DISPLAY-P.W.Board			IC7402	51T55336Y02	TC7SH04FU,JF-L -CP
DISPLAY-P.W.Board			IC7410	51-01932Z02	TC7SZ08FU-TE85LJF-CP
DISPLAY-P.W.Board			IC7601	83-38652Z35	19LIMO_Universal_7inch_TP

P.W.Board	MIS	MODEL	Ref.	Parts No.	Parts Name
DISPLAY-P.W.Board			IC7601	51-25191Z01	CY8CTMA616AA-12 -QT
DISPLAY-P.W.Board			L7000	24-22372Z06	IND,NRS6045T 47RM-E2
DISPLAY-P.W.Board			L7001	24-22372Z06	IND,NRS6045T 47RM-E2
DISPLAY-P.W.Board			L7003	24T95456W27	FBI,BLM18PG181SH1-CP
DISPLAY-P.W.Board			L7004	24T45379Y07	IND,D53LC 15RM -E2
DISPLAY-P.W.Board			L7005	24-22371Z01	IND,NRS4018T 2R2M-E2
DISPLAY-P.W.Board			L7006	24-22372Z06	IND,NRS6045T 47RM-E2
DISPLAY-P.W.Board			L7410	24T95456W31	FBI,BLM18PG471SH1-CP
DISPLAY-P.W.Board			L7411	24T95456W31	FBI,BLM18PG471SH1-CP
DISPLAY-P.W.Board			L7420	24T95456W27	FBI,BLM18PG181SH1-CP
DISPLAY-P.W.Board			L7421	24T95456W27	FBI,BLM18PG181SH1-CP
DISPLAY-P.W.Board			L7444	24-06212Z07	FBI,BLM15BD601SH1-CP
DISPLAY-P.W.Board			L7445	24-06212Z07	FBI,BLM15BD601SH1-CP
DISPLAY-P.W.Board			L7446	24-06212Z07	FBI,BLM15BD601SH1-CP
DISPLAY-P.W.Board			L7447	24-06212Z07	FBI,BLM15BD601SH1-CP
DISPLAY-P.W.Board			L7448	24-06212Z07	FBI,BLM15BD601SH1-CP
DISPLAY-P.W.Board			L7449	24-06212Z07	FBI,BLM15BD601SH1-CP
DISPLAY-P.W.Board			L7455	24-06212Z07	FBI,BLM15BD601SH1-CP
DISPLAY-P.W.Board			L7456	24-06212Z07	FBI,BLM15BD601SH1-CP
DISPLAY-P.W.Board			L7457	24-06212Z07	FBI,BLM15BD601SH1-CP
DISPLAY-P.W.Board			L7458	24-06212Z07	FBI,BLM15BD601SH1-CP
DISPLAY-P.W.Board			L7459	24-06212Z07	FBI,BLM15BD601SH1-CP
DISPLAY-P.W.Board			L7468	24-06212Z07	FBI,BLM15BD601SH1-CP
DISPLAY-P.W.Board			L7469	24-06212Z07	FBI,BLM15BD601SH1-CP
DISPLAY-P.W.Board			L7470	24-06212Z07	FBI,BLM15BD601SH1-CP
DISPLAY-P.W.Board			L7471	24-06212Z07	FBI,BLM15BD601SH1-CP

P.W.Board	MIS	MODEL	Ref.	Parts No.	Parts Name
DISPLAY-P.W.Board			L7472	24-06212Z07	FBI,BLM15BD601SH1-CP
DISPLAY-P.W.Board			L7473	24-06212Z07	FBI,BLM15BD601SH1-CP
DISPLAY-P.W.Board			L7474	24-06212Z07	FBI,BLM15BD601SH1-CP
DISPLAY-P.W.Board			L7482	24-06212Z06	FBI,BLM15BB221SH1-CP
DISPLAY-P.W.Board			Q7000	48-21840Z01	FET,RHP020N06-T100E2
DISPLAY-P.W.Board			Q7001	48-13000Z05	TR,DTC124EUBTL -CP
DISPLAY-P.W.Board			Q7002	48-17548Z01	TR,DSA500100L -CP
DISPLAY-P.W.Board			Q7003	48-21758Z01	TR,DSC2001S0L -CP
DISPLAY-P.W.Board			Q7004	48-20092Z02	TR,DMG563020R -CP
DISPLAY-P.W.Board			Q7005	48-17872Z01	TR,2PA1576Q -CP
DISPLAY-P.W.Board			Q7200	48T94875F06	DTB,113ZK-96 -CP
DISPLAY-P.W.Board			Q7202	48-17874Z01	TR,2PC4081Q -CP
DISPLAY-P.W.Board			Q7203	48-20092Z02	TR,DMG563020R -CP
DISPLAY-P.W.Board			R7000	06S35095Y08	RES,RK JUMPER 1/4-CP
DISPLAY-P.W.Board			R7001	06S15615Y73	RES,RK 103J 1/16 -CP
DISPLAY-P.W.Board			R7002	06S65415Y52	RES,RK 184F 1/16 -CP
DISPLAY-P.W.Board			R7003	06S45675W43	RES,RK JUMPER1/10-CP
DISPLAY-P.W.Board			R7004	06S15593Y56	RES,RK 202F 1/10 -CP
DISPLAY-P.W.Board			R7005	06S15593Y91	RES,RK 563F 1/10 -CP
DISPLAY-P.W.Board			R7006	06-12176Z10	RES,RK R56F 1/5 -CP
DISPLAY-P.W.Board			R7007	06S65415Y32	RES,RK 392F 1/16 -CP
DISPLAY-P.W.Board			R7009	06S45674W51	RES,RK 561J 1/10 -CP
DISPLAY-P.W.Board			R7010	06S65415Y45	RES,RK 473F 1/16 -CP
DISPLAY-P.W.Board			R7011	06S65415Y41	RES,RK 223F 1/16 -CP
DISPLAY-P.W.Board			R7012	06S65415Y37	RES,RK 103F 1/16 -CP
DISPLAY-P.W.Board			R7013	06S65415Y26	RES,RK 122F 1/16 -CP

P.W.Board	MIS	MODEL	Ref.	Parts No.	Parts Name
DISPLAY-P.W.Board			R7014	06S65415Y41	RES,RK 223F 1/16 -CP
DISPLAY-P.W.Board			R7015	06S15594Y16	RES,RK 564F 1/10 -CP
DISPLAY-P.W.Board			R7016	06S15615Y81	RES,RK 223J 1/16 -CP
DISPLAY-P.W.Board			R7019	06S45675W43	RES,RK JUMPER1/10-CP
DISPLAY-P.W.Board			R7020	06S15616Y23	RES,RK JUMPER1/16-CP
DISPLAY-P.W.Board			R7022	06S15615Y73	RES,RK 103J 1/16 -CP
DISPLAY-P.W.Board			R7024	06S15593Y92	RES,RK 623F 1/10 -CP
DISPLAY-P.W.Board			R7025	06S15594Y17	RES,RK 624F 1/10 -CP
DISPLAY-P.W.Board			R7026	06S15615Y25	RES,RK 101J 1/16 -CP
DISPLAY-P.W.Board			R7027	06S15593Y67	RES,RK 562F 1/10 -CP
DISPLAY-P.W.Board			R7028	06S15593Y95	RES,RK 823F 1/10 -CP
DISPLAY-P.W.Board			R7030	06S65415Y35	RES,RK 682F 1/16 -CP
DISPLAY-P.W.Board			R7031	06-25919Z07	RES,RK 243F 1/16 -CP
DISPLAY-P.W.Board			R7032	06S15593Y52	RES,RK 132F 1/10 -CP
DISPLAY-P.W.Board			R7033	06S15593Y82	RES,RK 243F 1/10 -CP
DISPLAY-P.W.Board			R7034	06S65415Y38	RES,RK 123F 1/16 -CP
DISPLAY-P.W.Board			R7035	06S65415Y39	RES,RK 153F 1/16 -CP
DISPLAY-P.W.Board			R7036	06S65415Y34	RES,RK 562F 1/16 -CP
DISPLAY-P.W.Board			R7037	06S65415Y48	RES,RK 823F 1/16 -CP
DISPLAY-P.W.Board			R7038	06S70072F61	RES,CP .222-J-1/4-CP
DISPLAY-P.W.Board			R7039	06S70072F61	RES,CP .222-J-1/4-CP
DISPLAY-P.W.Board			R7040	06S65415Y46	RES,RK 563F 1/16 -CP
DISPLAY-P.W.Board			R7041	06S65415Y37	RES,RK 103F 1/16 -CP
DISPLAY-P.W.Board			R7042	06S15616Y23	RES,RK JUMPER1/16-CP
DISPLAY-P.W.Board			R7043	06S15593Y91	RES,RK 563F 1/10 -CP
DISPLAY-P.W.Board			R7044	06S15615Y99	RES,RK 124J 1/16 -CP

P.W.Board	MIS	MODEL	Ref.	Parts No.	Parts Name
DISPLAY-P.W.Board			R7045	06S15594Y15	RES,RK 514F 1/10 -CP
DISPLAY-P.W.Board			R7046	06S15593Y94	RES,RK 753F 1/10 -CP
DISPLAY-P.W.Board			R7047	06S15615Y81	RES,RK 223J 1/16 -CP
DISPLAY-P.W.Board			R7048	06S65415Y49	RES,RK 104F 1/16 -CP
DISPLAY-P.W.Board			R7049	06S15594Y12	RES,RK 394F 1/10 -CP
DISPLAY-P.W.Board			R7050	06S15593Y93	RES,RK 683F 1/10 -CP
DISPLAY-P.W.Board			R7051	06S15593Y91	RES,RK 563F 1/10 -CP
DISPLAY-P.W.Board			R7052	06S15594Y14	RES,RK 474F 1/10 -CP
DISPLAY-P.W.Board			R7053	06S15594Y14	RES,RK 474F 1/10 -CP
DISPLAY-P.W.Board			R7057	06S15593Y78	RES,RK 163F 1/10 -CP
DISPLAY-P.W.Board			R7060	06S65415Y49	RES,RK 104F 1/16 -CP
DISPLAY-P.W.Board			R7061	06S65415Y44	RES,RK 393F 1/16 -CP
DISPLAY-P.W.Board			R7063	06S70072F29	RES,CP .101-J-1/4-CP
DISPLAY-P.W.Board			R7064	06S15615Y99	RES,RK 124J 1/16 -CP
DISPLAY-P.W.Board			R7065	06-25919Z07	RES,RK 243F 1/16 -CP
DISPLAY-P.W.Board			R7066	06S15615Y85	RES,RK 333J 1/16 -CP
DISPLAY-P.W.Board			R7067	06S65415Y32	RES,RK 392F 1/16 -CP
DISPLAY-P.W.Board			R7068	06S65415Y41	RES,RK 223F 1/16 -CP
DISPLAY-P.W.Board			R7069	06S15615Y83	RES,RK 273J 1/16 -CP
DISPLAY-P.W.Board			R7070	06S15616Y27	RES,RK 2R2J 1/16 -CP
DISPLAY-P.W.Board			R7071	06S65415Y31	RES,RK 332F 1/16 -CP
DISPLAY-P.W.Board			R7072	06S15593Y45	RES,RK 681F 1/10 -CP
DISPLAY-P.W.Board			R7073	06S15593Y94	RES,RK 753F 1/10 -CP
DISPLAY-P.W.Board			R7075	06S15594Y03	RES,RK 164F 1/10 -CP
DISPLAY-P.W.Board			R7077	06S65415Y38	RES,RK 123F 1/16 -CP
DISPLAY-P.W.Board			R7078	06S65415Y30	RES,RK 272F 1/16 -CP

P.W.Board	MIS	MODEL	Ref.	Parts No.	Parts Name
DISPLAY-P.W.Board			R7079	06S65415Y33	RES,RK 472F 1/16 -CP
DISPLAY-P.W.Board			R7080	06S15593Y66	RES,RK 512F 1/10 -CP
DISPLAY-P.W.Board			R7081	06S15593Y91	RES,RK 563F 1/10 -CP
DISPLAY-P.W.Board			R7082	06S15594Y16	RES,RK 564F 1/10 -CP
DISPLAY-P.W.Board			R7087	06S15594Y11	RES,RK 364F 1/10 -CP
DISPLAY-P.W.Board			R7089	06S65415Y30	RES,RK 272F 1/16 -CP
DISPLAY-P.W.Board			R7090	06S65415Y29	RES,RK 222F 1/16 -CP
DISPLAY-P.W.Board			R7091	06S65415Y32	RES,RK 392F 1/16 -CP
DISPLAY-P.W.Board			R7092	06S15593Y93	RES,RK 683F 1/10 -CP
DISPLAY-P.W.Board			R7093	06S65415Y17	RES,RK 221F 1/16 -CP
DISPLAY-P.W.Board			R7094	06-12176Z10	RES,RK R56F 1/5 -CP
DISPLAY-P.W.Board			R7210	06S65415Y30	RES,RK 272F 1/16 -CP
DISPLAY-P.W.Board			R7211	06S65415Y17	RES,RK 221F 1/16 -CP
DISPLAY-P.W.Board			R7212	06S65415Y17	RES,RK 221F 1/16 -CP
DISPLAY-P.W.Board			R7213	06S65415Y37	RES,RK 103F 1/16 -CP
DISPLAY-P.W.Board			R7214	06S65415Y42	RES,RK 273F 1/16 -CP
DISPLAY-P.W.Board			R7215	06S65415Y37	RES,RK 103F 1/16 -CP
DISPLAY-P.W.Board			R7216	06S65415Y41	RES,RK 223F 1/16 -CP
DISPLAY-P.W.Board			R7217	06S65415Y41	RES,RK 223F 1/16 -CP
DISPLAY-P.W.Board			R7218	06S65415Y41	RES,RK 223F 1/16 -CP
DISPLAY-P.W.Board			R7219	06S65415Y41	RES,RK 223F 1/16 -CP
DISPLAY-P.W.Board			R7222	06S15593Y29	RES,RK 151F 1/10 -CP
DISPLAY-P.W.Board			R7223	06S15593Y33	RES,RK 221F 1/10 -CP
DISPLAY-P.W.Board			R7224	06S15593Y35	RES,RK 271F 1/10 -CP
DISPLAY-P.W.Board			R7228	06S15593Y29	RES,RK 151F 1/10 -CP
DISPLAY-P.W.Board			R7229	06S15593Y33	RES,RK 221F 1/10 -CP

P.W.Board	MIS	MODEL	Ref.	Parts No.	Parts Name
DISPLAY-P.W.Board			R7230	06S15593Y35	RES,RK 271F 1/10 -CP
DISPLAY-P.W.Board			R7234	06S15593Y41	RES,RK 471F 1/10 -CP
DISPLAY-P.W.Board			R7235	06S15593Y41	RES,RK 471F 1/10 -CP
DISPLAY-P.W.Board			R7236	06S15593Y41	RES,RK 471F 1/10 -CP
DISPLAY-P.W.Board			R7237	06S15593Y41	RES,RK 471F 1/10 -CP
DISPLAY-P.W.Board			R7238	06S15593Y41	RES,RK 471F 1/10 -CP
DISPLAY-P.W.Board			R7239	06S15593Y41	RES,RK 471F 1/10 -CP
DISPLAY-P.W.Board			R7240	06S15593Y41	RES,RK 471F 1/10 -CP
DISPLAY-P.W.Board			R7241	06S45675W43	RES,RK JUMPER1/10-CP
DISPLAY-P.W.Board			R7247	06S15616Y23	RES,RK JUMPER1/16-CP
DISPLAY-P.W.Board			R7248	06S15616Y23	RES,RK JUMPER1/16-CP
DISPLAY-P.W.Board			R7249	06S15616Y23	RES,RK JUMPER1/16-CP
DISPLAY-P.W.Board			R7250	06S15616Y23	RES,RK JUMPER1/16-CP
DISPLAY-P.W.Board			R7251	06S15615Y09	RES,RK 22RJ 1/16 -CP
DISPLAY-P.W.Board			R7252	06S15615Y09	RES,RK 22RJ 1/16 -CP
DISPLAY-P.W.Board			R7253	06S15615Y09	RES,RK 22RJ 1/16 -CP
DISPLAY-P.W.Board			R7256	06S15615Y49	RES,RK 102J 1/16 -CP
DISPLAY-P.W.Board			R7257	06S15615Y81	RES,RK 223J 1/16 -CP
DISPLAY-P.W.Board			R7400	06S15615Y33	RES,RK 221J 1/16 -CP
DISPLAY-P.W.Board			R7401	06S15615Y33	RES,RK 221J 1/16 -CP
DISPLAY-P.W.Board			R7403	06S15615Y73	RES,RK 103J 1/16 -CP
DISPLAY-P.W.Board			R7404	06S15616Y23	RES,RK JUMPER1/16-CP
DISPLAY-P.W.Board			R7405	06S15615Y25	RES,RK 101J 1/16 -CP
DISPLAY-P.W.Board			R7406	06S15615Y73	RES,RK 103J 1/16 -CP
DISPLAY-P.W.Board			R7407	06S15615Y33	RES,RK 221J 1/16 -CP
DISPLAY-P.W.Board			R7411	06S65415Y11	RES,RK 68RF 1/16 -CP

P.W.Board	MIS	MODEL	Ref.	Parts No.	Parts Name
DISPLAY-P.W.Board			R7412	06S15616Y23	RES,RK JUMPER1/16-CP
DISPLAY-P.W.Board			R7413	06S65415Y11	RES,RK 68RF 1/16 -CP
DISPLAY-P.W.Board			R7414	06S65415Y11	RES,RK 68RF 1/16 -CP
DISPLAY-P.W.Board			R7415	06S65415Y11	RES,RK 68RF 1/16 -CP
DISPLAY-P.W.Board			R7416	06S65415Y11	RES,RK 68RF 1/16 -CP
DISPLAY-P.W.Board			R7417	06S65415Y11	RES,RK 68RF 1/16 -CP
DISPLAY-P.W.Board			R7418	06S15615Y13	RES,RK 33RJ 1/16 -CP
DISPLAY-P.W.Board			R7420	06S15615Y33	RES,RK 221J 1/16 -CP
DISPLAY-P.W.Board			R7421	06S15615Y33	RES,RK 221J 1/16 -CP
DISPLAY-P.W.Board			R7422	06S15615Y33	RES,RK 221J 1/16 -CP
DISPLAY-P.W.Board			R7429	06S15615Y33	RES,RK 221J 1/16 -CP
DISPLAY-P.W.Board			R7434	06S15615Y53	RES,RK 152J 1/16 -CP
DISPLAY-P.W.Board			R7435	06S15616Y23	RES,RK JUMPER1/16-CP
DISPLAY-P.W.Board			R7436	06S15616Y23	RES,RK JUMPER1/16-CP
DISPLAY-P.W.Board			R7440	06S15616Y23	RES,RK JUMPER1/16-CP
DISPLAY-P.W.Board			R7441	06S15616Y23	RES,RK JUMPER1/16-CP
DISPLAY-P.W.Board			R7443	06S15615Y73	RES,RK 103J 1/16 -CP
DISPLAY-P.W.Board			R7460	06S65415Y11	RES,RK 68RF 1/16 -CP
DISPLAY-P.W.Board			R7461	06S65415Y11	RES,RK 68RF 1/16 -CP
DISPLAY-P.W.Board			R7462	06S65415Y11	RES,RK 68RF 1/16 -CP
DISPLAY-P.W.Board			R7463	06S65415Y11	RES,RK 68RF 1/16 -CP
DISPLAY-P.W.Board			R7464	06S65415Y11	RES,RK 68RF 1/16 -CP
DISPLAY-P.W.Board			R7465	06S65415Y11	RES,RK 68RF 1/16 -CP
DISPLAY-P.W.Board			R7466	06S65415Y11	RES,RK 68RF 1/16 -CP
DISPLAY-P.W.Board			R7467	06S65415Y11	RES,RK 68RF 1/16 -CP
DISPLAY-P.W.Board			R7475	06S65415Y11	RES,RK 68RF 1/16 -CP

P.W.Board	MIS	MODEL	Ref.	Parts No.	Parts Name
DISPLAY-P.W.Board			R7476	06S65415Y11	RES,RK 68RF 1/16 -CP
DISPLAY-P.W.Board			R7477	06S65415Y11	RES,RK 68RF 1/16 -CP
DISPLAY-P.W.Board			R7478	06S65415Y11	RES,RK 68RF 1/16 -CP
DISPLAY-P.W.Board			R7479	06S15615Y73	RES,RK 103J 1/16 -CP
DISPLAY-P.W.Board			R7480	06S15615Y33	RES,RK 221J 1/16 -CP
DISPLAY-P.W.Board			R7482	06S15615Y33	RES,RK 221J 1/16 -CP
DISPLAY-P.W.Board			R7483	06S15615Y33	RES,RK 221J 1/16 -CP
DISPLAY-P.W.Board			R7484	06S15615Y33	RES,RK 221J 1/16 -CP
DISPLAY-P.W.Board			R7485	06S15616Y22	RES,RK 105J 1/16 -CP
DISPLAY-P.W.Board			R7486	06S65415Y03	RES,RK 15RF 1/16 -CP
DISPLAY-P.W.Board			R7490	06S15615Y49	RES,RK 102J 1/16 -CP
DISPLAY-P.W.Board			R7491	06S15615Y09	RES,RK 22RJ 1/16 -CP
DISPLAY-P.W.Board			R7492	06S15615Y73	RES,RK 103J 1/16 -CP
DISPLAY-P.W.Board			R7501	06S15616Y23	RES,RK JUMPER1/16-CP
DISPLAY-P.W.Board			R7502	06S15616Y23	RES,RK JUMPER1/16-CP
DISPLAY-P.W.Board			R7504	06S15616Y23	RES,RK JUMPER1/16-CP
DISPLAY-P.W.Board			R7510	06S15616Y23	RES,RK JUMPER1/16-CP
DISPLAY-P.W.Board			R7518	06S15615Y73	RES,RK 103J 1/16 -CP
DISPLAY-P.W.Board			R7521	06S15615Y60	RES,RK 302J 1/16 -CP
DISPLAY-P.W.Board			R7522	06S65415Y24	RES,RK 821F 1/16 -CP
DISPLAY-P.W.Board			R7523	06S65415Y08	RES,RK 39RF 1/16 -CP
DISPLAY-P.W.Board			R7524	06S65415Y07	RES,RK 33RF 1/16 -CP
DISPLAY-P.W.Board			R7525	06S65415Y04	RES,RK 18RF 1/16 -CP
DISPLAY-P.W.Board			R7526	06S15616Y23	RES,RK JUMPER1/16-CP
DISPLAY-P.W.Board			R7527	06S65415Y30	RES,RK 272F 1/16 -CP
DISPLAY-P.W.Board			R7528	06S65415Y17	RES,RK 221F 1/16 -CP

P.W.Board	MIS	MODEL	Ref.	Parts No.	Parts Name
DISPLAY-P.W.Board			R7529	06S65415Y20	RES,RK 391F 1/16 -CP
DISPLAY-P.W.Board			R7530	06S65415Y02	RES,RK 12RF 1/16 -CP
DISPLAY-P.W.Board			R7531	06S65415Y19	RES,RK 331F 1/16 -CP
DISPLAY-P.W.Board			R7532	06S65415Y16	RES,RK 181F 1/16 -CP
DISPLAY-P.W.Board			R7533	06S65415Y27	RES,RK 152F 1/16 -CP
DISPLAY-P.W.Board			R7534	06S65415Y22	RES,RK 561F 1/16 -CP
DISPLAY-P.W.Board			R7535	06S65415Y25	RES,RK 102F 1/16 -CP
DISPLAY-P.W.Board			R7536	06S65415Y13	RES,RK 101F 1/16 -CP
DISPLAY-P.W.Board			R7537	06S65415Y31	RES,RK 332F 1/16 -CP
DISPLAY-P.W.Board			R7538	06S65415Y28	RES,RK 182F 1/16 -CP
DISPLAY-P.W.Board			R7539	06S65415Y22	RES,RK 561F 1/16 -CP
DISPLAY-P.W.Board			R7540	06S15616Y23	RES,RK JUMPER1/16-CP
DISPLAY-P.W.Board			R7541	06S65415Y22	RES,RK 561F 1/16 -CP
DISPLAY-P.W.Board			R7542	06S65415Y03	RES,RK 15RF 1/16 -CP
DISPLAY-P.W.Board			R7604	06S15615Y65	RES,RK 472J 1/16 -CP
DISPLAY-P.W.Board			R7606	06S15615Y09	RES,RK 22RJ 1/16 -CP
DISPLAY-P.W.Board			R7607	06S15615Y09	RES,RK 22RJ 1/16 -CP
DISPLAY-P.W.Board			R7608	06S15615Y25	RES,RK 101J 1/16 -CP
DISPLAY-P.W.Board			R7609	06S15615Y25	RES,RK 101J 1/16 -CP
DISPLAY-P.W.Board			R7610	06S15615Y43	RES,RK 561J 1/16 -CP
DISPLAY-P.W.Board			R7611	06S15615Y43	RES,RK 561J 1/16 -CP
DISPLAY-P.W.Board			R7612	06S15615Y43	RES,RK 561J 1/16 -CP
DISPLAY-P.W.Board			R7613	06S15615Y43	RES,RK 561J 1/16 -CP
DISPLAY-P.W.Board			R7614	06S15615Y43	RES,RK 561J 1/16 -CP
DISPLAY-P.W.Board			R7615	06S15615Y43	RES,RK 561J 1/16 -CP
DISPLAY-P.W.Board			R7616	06S15615Y43	RES,RK 561J 1/16 -CP

P.W.Board	MIS	MODEL	Ref.	Parts No.	Parts Name
DISPLAY-P.W.Board			R7617	06S15615Y43	RES,RK 561J 1/16 -CP
DISPLAY-P.W.Board			R7618	06S15615Y43	RES,RK 561J 1/16 -CP
DISPLAY-P.W.Board			R7619	06S15615Y43	RES,RK 561J 1/16 -CP
DISPLAY-P.W.Board			R7620	06S15615Y43	RES,RK 561J 1/16 -CP
DISPLAY-P.W.Board			R7621	06S15615Y43	RES,RK 561J 1/16 -CP
DISPLAY-P.W.Board			R7622	06S15615Y43	RES,RK 561J 1/16 -CP
DISPLAY-P.W.Board			R7623	06S15615Y43	RES,RK 561J 1/16 -CP
DISPLAY-P.W.Board			R7624	06S15615Y43	RES,RK 561J 1/16 -CP
DISPLAY-P.W.Board			SD7001	48-17988Z01	DIO,SHT RB060M-60-CP
DISPLAY-P.W.Board			SD7002	48-19296Z01	DIO,SHT RB056L-40-E1
DISPLAY-P.W.Board			SD7003	48-19296Z01	DIO,SHT RB056L-40-E1
DISPLAY-P.W.Board			XL7400	91-26661Z12	XTL,NX3225SAAG27.0CP
DISPLAY-P.W.Board			ZD7000	48-16145Z40	DIO,ZEN PZU10B2 -CP
GPS-P.W.Board			ANT900	09T45601Y01	GT5-1P-DS(70) -DB
GPS-P.W.Board			C905	08S35349Y16	CAP,CER 105K-B1A -CP
GPS-P.W.Board			C906	08S45676W80	CAP,CER 223K-B1E -CP
GPS-P.W.Board			C907	08S45677W40	CAP,CER.151J-CH1H-CP
GPS-P.W.Board			C908	08S45232Y17	CAP,CER 104K-B0J -CP
GPS-P.W.Board			C909	08S45231Y14	CAP,CER 12RJ-CH1H-CP
GPS-P.W.Board			C910	08S35349Y21	CAP,CER 104K-B1H -CP
GPS-P.W.Board			C911	08S65669Y03	CAP,CER 224KX7R1H-CP
GPS-P.W.Board			C912	08S45231Y19	CAP,CER 33RJ-CH1H-CP
GPS-P.W.Board			C913	08S35374W12	CAP,CER 106K-B0J -CP
GPS-P.W.Board			C914	08S65669Y03	CAP,CER 224KX7R1H-CP
GPS-P.W.Board			C915	08S35374W12	CAP,CER 106K-B0J -CP
GPS-P.W.Board			C917	08S45231Y17	CAP,CER 22RJ-CH1H-CP

P.W.Board	MIS	MODEL	Ref.	Parts No.	Parts Name
GPS-P.W.Board			C918	08S35374W12	CAP,CER 106K-B0J -CP
GPS-P.W.Board			C919	08S65669Y03	CAP,CER 224KX7R1H-CP
GPS-P.W.Board			C920	08S65669Y03	CAP,CER 224KX7R1H-CP
GPS-P.W.Board			C921	08S65669Y03	CAP,CER 224KX7R1H-CP
GPS-P.W.Board			C922	08S65677Y06	CAP,CER 226MX7R1C-CP
GPS-P.W.Board			C923	08-16834Z01	CAP,CER 104KX7R1H-CP
GPS-P.W.Board			C924	08S35349Y17	CAP,CER 225K-B0J -CP
GPS-P.W.Board			C925	08S65676Y03	CAP,CER 225KX7R1C-CP
GPS-P.W.Board			C926	08S45231Y29	CAP,CER 221J-CH1H-CP
GPS-P.W.Board			C928	08S35374W12	CAP,CER 106K-B0J -CP
GPS-P.W.Board			C929	08S35374W12	CAP,CER 106K-B0J -CP
GPS-P.W.Board			C930	08S65667Y01	CAP,CER 224KX5R1C-CP
GPS-P.W.Board			CH900	09-32417Z01	BTB,IMSA9984S-100YEZ
GPS-P.W.Board			D900	48T94608F01	DIO,DA204U(MIN) -CP
GPS-P.W.Board			IC901	51T93332F02	NJM2903V-TE2 -SE2
GPS-P.W.Board			IC902	51-33995Z01	ASSY,GYR SMI130 -EE2
GPS-P.W.Board			IC903	51-18743Z01	TLF4277EL -SE2
GPS-P.W.Board			L900	24T95456W31	FBI,BLM18PG471SH1-CP
GPS-P.W.Board			L901	24T75143Y22	IND,HK1005 R056J -CP
GPS-P.W.Board			Q900	48-13000Z01	TR,DTC114EUBTL -CP
GPS-P.W.Board			Q901	48-13000Z05	TR,DTC124EUBTL -CP
GPS-P.W.Board			R901	06S65415Y29	RES,RK 222F 1/16 -CP
GPS-P.W.Board			R902	06S70072F77	RES,CP .103-J-1/4-CP
GPS-P.W.Board			R903	06S15615Y97	RES,RK 104J 1/16 -CP
GPS-P.W.Board			R904	06S15615Y73	RES,RK 103J 1/16 -CP
GPS-P.W.Board			R905	06S15615Y73	RES,RK 103J 1/16 -CP

P.W.Board	MIS	MODEL	Ref.	Parts No.	Parts Name
GPS-P.W.Board			R906	06S15615Y73	RES,RK 103J 1/16 -CP
GPS-P.W.Board			R907	06S15615Y73	RES,RK 103J 1/16 -CP
GPS-P.W.Board			R908	06S15615Y89	RES,RK 473J 1/16 -CP
GPS-P.W.Board			R909	06S35095Y03	RES,RK 473J 1/4 -CP
GPS-P.W.Board			R910	06S15593Y78	RES,RK 163F 1/10 -CP
GPS-P.W.Board			R911	06S15593Y82	RES,RK 243F 1/10 -CP
GPS-P.W.Board			R913	06S15616Y23	RES,RK JUMPER1/16-CP
GPS-P.W.Board			R914	06S15615Y13	RES,RK 33RJ 1/16 -CP
GPS-P.W.Board			R915	06S15615Y81	RES,RK 223J 1/16 -CP
GPS-P.W.Board			R916	06S15616Y23	RES,RK JUMPER1/16-CP
GPS-P.W.Board			R917	06S15616Y23	RES,RK JUMPER1/16-CP
GPS-P.W.Board			R918	06S15615Y57	RES,RK 222J 1/16 -CP
GPS-P.W.Board			R919	06S15615Y57	RES,RK 222J 1/16 -CP
GPS-P.W.Board			R920	06S15616Y23	RES,RK JUMPER1/16-CP
GPS-P.W.Board			R921	06S15615Y25	RES,RK 101J 1/16 -CP
GPS-P.W.Board			R922	06S15615Y25	RES,RK 101J 1/16 -CP
GPS-P.W.Board			R923	06S15615Y81	RES,RK 223J 1/16 -CP
GPS-P.W.Board			R925	06S15615Y81	RES,RK 223J 1/16 -CP
GPS-P.W.Board			R927	06S65415Y33	RES,RK 472F 1/16 -CP
GPS-P.W.Board			R928	06S65415Y37	RES,RK 103F 1/16 -CP
GPS-P.W.Board			R929	06S65415Y33	RES,RK 472F 1/16 -CP
GPS-P.W.Board			R930	06S35083Y64	RES,RK 3R3F 1/4 -CP
GPS-P.W.Board			R931	06S15593Y93	RES,RK 683F 1/10 -CP
GPS-P.W.Board			R932	06S35083Y19	RES,RK 331F 1/4 -CP
GPS-P.W.Board			R933	06S65415Y27	RES,RK 152F 1/16 -CP
GPS-P.W.Board			R934	06S15593Y68	RES,RK 622F 1/10 -CP

P.W.Board	MIS	MODEL	Ref.	Parts No.	Parts Name
GPS-P.W.Board			SD900	48-16030Z02	DIO,SHT 1PS79SB31-CP
GPS-P.W.Board			TU900	TU-34948Z01	GPS GV-8720B -EA
GPS-P.W.Board			Z900	91T45556Y03	EMI,NFM21HC101U1H-CP
GPS-P.W.Board			Z901	91T45556Y03	EMI,NFM21HC101U1H-CP
KEY-P.W.Board			C8000	08S45231Y28	CAP,CER 181J-CH1H-CP
KEY-P.W.Board			C8001	08S45231Y28	CAP,CER 181J-CH1H-CP
KEY-P.W.Board			C8002	08S45231Y28	CAP,CER 181J-CH1H-CP
KEY-P.W.Board			C8003	08S45231Y28	CAP,CER 181J-CH1H-CP
KEY-P.W.Board			C8004	08S45231Y28	CAP,CER 181J-CH1H-CP
KEY-P.W.Board			C8005	08S45231Y28	CAP,CER 181J-CH1H-CP
KEY-P.W.Board			C8006	08S45231Y28	CAP,CER 181J-CH1H-CP
KEY-P.W.Board			C8007	08S65668Y05	CAP,CER 224KX5R1A-CP
KEY-P.W.Board			C8008	08S65668Y05	CAP,CER 224KX5R1A-CP
KEY-P.W.Board			C8009	08S35349Y17	CAP,CER 225K-B0J -CP
KEY-P.W.Board			C8010	08-26717Z01	CAP,CER105KX5R/B1ACP
KEY-P.W.Board			C8011	08-26717Z01	CAP,CER105KX5R/B1ACP
KEY-P.W.Board			CB8000	09-25711Z04	FFC,FH33-40S-0.5SHER
KEY-P.W.Board			IC8000	51-11988Z01	RPMS1381-H19-E4A-NE5
KEY-P.W.Board			IC8001	51-20270Z01	PNJ4K01F -CP
KEY-P.W.Board			LD8000	48-30329Z03	LED,R/G/B CRGB1314CP
KEY-P.W.Board			LD8001	48-30329Z03	LED,R/G/B CRGB1314CP
KEY-P.W.Board			LD8002	48-11867Z01	LED,WHT SMLE12WBC7CP
KEY-P.W.Board			LD8003	48-11867Z01	LED,WHT SMLE12WBC7CP
KEY-P.W.Board			LD8004	48-11867Z01	LED,WHT SMLE12WBC7CP
KEY-P.W.Board			LD8005	48-11867Z01	LED,WHT SMLE12WBC7CP
KEY-P.W.Board			LD8006	48-11867Z01	LED,WHT SMLE12WBC7CP

P.W.Board	MIS	MODEL	Ref.	Parts No.	Parts Name
KEY-P.W.Board			LD8007	48-11867Z01	LED,WHT SMLE12WBC7CP
KEY-P.W.Board			LD8008	48-11867Z01	LED,WHT SMLE12WBC7CP
KEY-P.W.Board			MC8000	50-39891Z01	MIC,KRM5200-058050E2
KEY-P.W.Board			R8000	06S65415Y30	RES,RK 272F 1/16 -CP
KEY-P.W.Board			R8001	06S65415Y32	RES,RK 392F 1/16 -CP
KEY-P.W.Board			R8002	06S65415Y36	RES,RK 822F 1/16 -CP
KEY-P.W.Board			R8003	06S65415Y30	RES,RK 272F 1/16 -CP
KEY-P.W.Board			R8004	06S65415Y32	RES,RK 392F 1/16 -CP
KEY-P.W.Board			R8005	06S65415Y36	RES,RK 822F 1/16 -CP
KEY-P.W.Board			R8006	06S65415Y42	RES,RK 273F 1/16 -CP
KEY-P.W.Board			R8007	06S15616Y23	RES,RK JUMPER1/16-CP
KEY-P.W.Board			R8008	06S45674W25	RES,RK 47RJ 1/10 -CP
KEY-P.W.Board			R8009	06S15615Y81	RES,RK 223J 1/16 -CP
KEY-P.W.Board			R8010	06S15615Y49	RES,RK 102J 1/16 -CP
KEY-P.W.Board			R8011	06S15616Y39	RES,RK 475J 1/16 -CP
KEY-P.W.Board			SW8000	40T65353Y01	SW,TACT SKRPACE010E2
KEY-P.W.Board			SW8001	40T65353Y01	SW,TACT SKRPACE010E2
KEY-P.W.Board			SW8002	40T65353Y01	SW,TACT SKRPACE010E2
KEY-P.W.Board			SW8003	40T65353Y01	SW,TACT SKRPACE010E2
KEY-P.W.Board			SW8004	40T65353Y01	SW,TACT SKRPACE010E2
KEY-P.W.Board			SW8005	40T65353Y01	SW,TACT SKRPACE010E2
KEY-P.W.Board			SW8006	40T65353Y01	SW,TACT SKRPACE010E2
KEY-P.W.Board			SW8007	40T65353Y01	SW,TACT SKRPACE010E2
KEY-P.W.Board			SW8008	40T65353Y01	SW,TACT SKRPACE010E2
KEY-P.W.Board			SW8009	40T65353Y01	SW,TACT SKRPACE010E2
KEY-P.W.Board			ZD8000	48-01607Z08	DIO,ZEN LUDZ3.9B -CP

P.W.Board	MIS	MODEL	Ref.	Parts No.	Parts Name
KEY-P.W.Board			ZD8001	48-01607Z08	DIO,ZEN LUDZ3.9B -CP
KEY-P.W.Board			ZD8002	48-01607Z08	DIO,ZEN LUDZ3.9B -CP
KEY-P.W.Board			ZD8003	48-01607Z08	DIO,ZEN LUDZ3.9B -CP
KEY-P.W.Board			ZD8004	48-01607Z08	DIO,ZEN LUDZ3.9B -CP
KEY-P.W.Board			ZD8005	48-01607Z08	DIO,ZEN LUDZ3.9B -CP
KEY-P.W.Board			ZD8006	48-01607Z08	DIO,ZEN LUDZ3.9B -CP
KEY-P.W.Board			ZD8007	48-01607Z08	DIO,ZEN LUDZ3.9B -CP
KEY-P.W.Board			ZD8008	48-01607Z08	DIO,ZEN LUDZ3.9B -CP
KEY-P.W.Board			ZD8009	48-01607Z08	DIO,ZEN LUDZ3.9B -CP
KEY-P.W.Board			ZD8010	48-01607Z08	DIO,ZEN LUDZ3.9B -CP
KEY-P.W.Board			ZD8011	48-01607Z08	DIO,ZEN LUDZ3.9B -CP
KEY-P.W.Board			ZD8012	48-01607Z08	DIO,ZEN LUDZ3.9B -CP
BT.ANT-P.W.Board			ANT9001	09-07494Z01	U.FL-R-SMT-1(80)-E2
BT.ANT-P.W.Board			C9003	08S45231Y40	CAP,CER 3R9C-CH1H-CP
Miscellaneous			ANT5502	09-24492Z04	ASSY,U.FL-2LP-066N1
Miscellaneous			ET3150	09-19615Z02	ASSY,ANID-0139-02A
Miscellaneous			ET7601	40-29927Z01	ASSY,HCDSS0A002D
Miscellaneous			LCD7500	65-30872Z01	ASSY,A070VTN03.0
Miscellaneous			M3490	59-14185Z03	MOTOR,ASB0412MA-9D11