EXPLODED VIEW/PARTS LIST

Escutcheon section

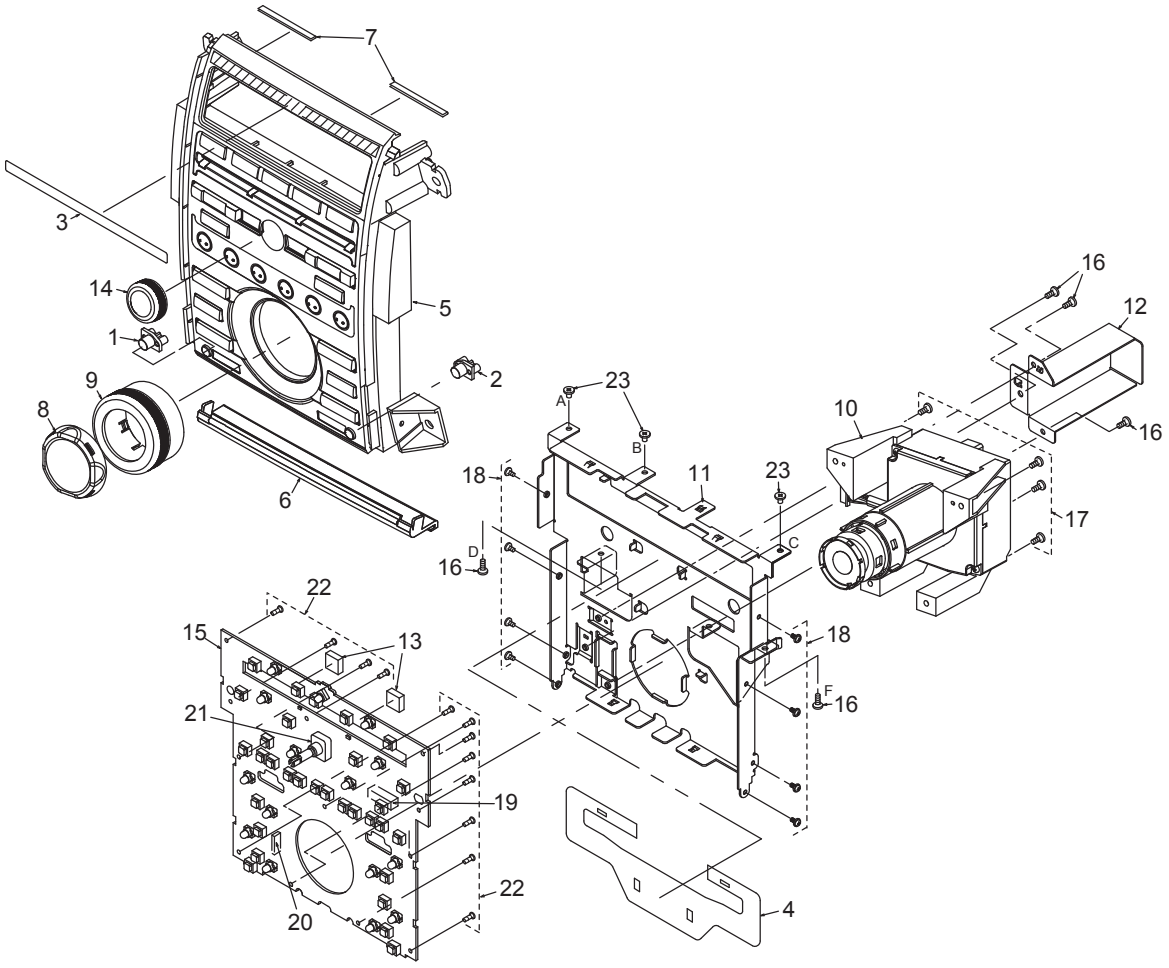

NO.	PART NO.	DESCRIPTION	Q'TY
1	382-7086-02	BUTTON	1
2	382-7087-02	BUTTON	1
3	290-0175-00	CAUTION LABEL(PH3007BA/B/E)	1
4	347-7848-00	SPACER	1
5	940-8203-01 940-8421-01 940-8425-01 940-8422-01 940-8423-01 940-8424-01	ES-ASSY(PH3007BA) ES-ASSY(PH3007BB) ES-ASSY(PH3007BE) ES-ASSY(PH3007BF) ES-ASSY(PH3007BG) ES-ASSY(PH3007BH)	1 1 1 1 1 1
6	335-7274-40	WOOD PANEL	1
7	347-7413-00	CUSHION SHEET	2
8	947-0560-01	JOG KNOB	1
9	947-0559-00	JOG-CONTROLLER	1
10	947-0558-02	JOG BASE	1
11	309-0802-01	ES-PLATE	1

NO.	PART NO.	DESCRIPTION	Q'TY
12	331-3862-01	JOG-CVR	1
13	345-5821-00	CUSHION RUBBER	2
14	947-0557-01 947-0598-01	KNOB ASSY(PH3007BA/B/E) KNOB ASSY(PH3007BF/G/H)	1 1
15	----------	SWITCH PWB	1
16	714-2606-8B	MACHINE SCREW(M2.6x6)	5
17	716-3632-00	SCREW(M2.6x10)	4
18	716-0878-50	SCREW(M2.6x5)	8
19	074-3014-70	OUTLET SOCKET	1
20	076-6000-63	PLUG	1
21	016-0025-03 016-0025-05	VR W/SHAFT(PH3007BA/B/E) VR W/SHAFT(PH3007BF/G/H)	1 1
22	716-0778-51	SCREW(M2x5)	12
23	716-3504-50	SCREW(M2.6x4)	3

Main section

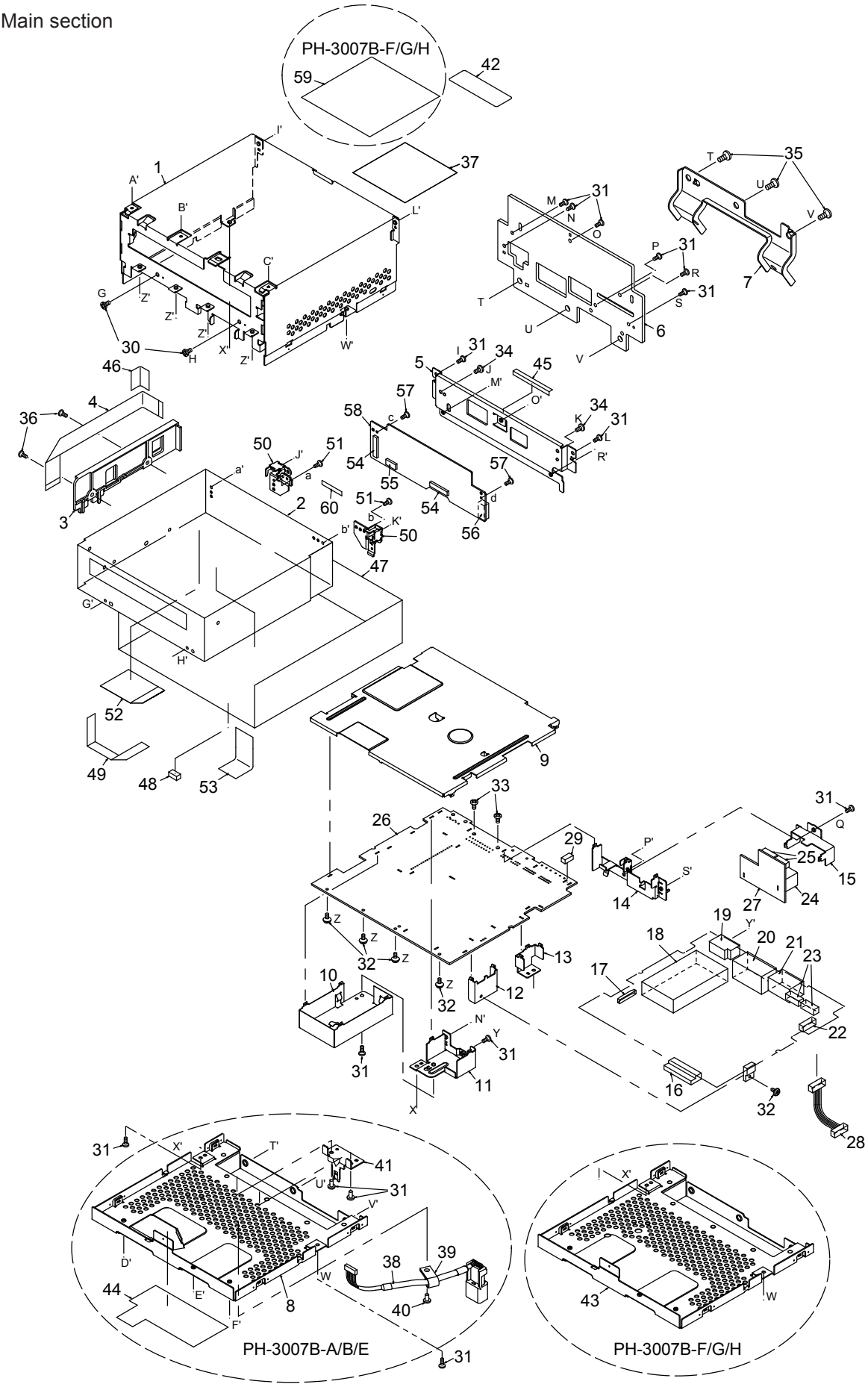

NO.	PART NO.	DESCRIPTION	Q'TY
1	310-1800-01	UPPER CASE	1
2	929-2509-00	DVD/CD CHANGER	1
3	335-7275-01	FFC-HOLDER	1
4	816-2654-00	FLAT WIRE(30P)	1
5	331-3858-03	MECH BRKT	1
6	313-1908-01	HEAT SINK	1
7	300-8020-01	MTG-BRKT	1
8	304-0480-08	LOWER-CVR(PH3007BA/B/E)	1
9	331-3863-02	SHIELD PLATE	1
10	331-3864-02	SHIELD CASE	1
11	331-3860-00	ANT-HOLDER	1
12	331-3859-00	TR-HOLDER	1
13	331-3857-01	PWB BRKT	1
14	331-3866-00	REAR PLATE	1
15	331-3861-00	CN-HOLDER	1
16	076-3011-70	PLUG	1
17	074-1287-80	OUTLET SOCKET	1
18	880-1920P	TUNER PACK	1
19	092-2210-00	ANT-RECEPT	1
20	074-1166-01	OUTLET SOCKET(20P)	1
21	074-1168-14	OUTLET SOCKET(14P)	1
22	076-6001-56	PLUG	1
23	076-0368-14	PLUG	2
24	074-4025-32	OUTLET SOCKET	1
25	074-0898-14	OUTLET SOCKET	2
26	----------	MAIN PWB	1
27	----------	CN PWB	1
28	854-4575-01	EXTENSION LEAD(6P)	1
29	345-5805-00	GASKET	1
30	714-3005-8B	MACHINE SCREW(M3x5)	2
31	714-2606-8B	SCREW(M2.6x6) (PH3007BA/B/E) (PH3007BF/G/H)	 15 13

NO.	PART NO.	DESCRIPTION	Q'TY
32	716-0878-50	SCREW(M2.6x5)	5
33	778-3006-00	TAP-SCREW(3x6)	2
34	731-3005-8B	TAPTIGHT(M3x5)	2
35	716-0678-50	SCREW(M5x8)	3
36	716-0821-53	SCREW(M3x5)	2
37	276-0272-01 276-0272-11 276-0272-51 276-0272-21 276-0272-31 276-0272-41	SETPLATE(PH3007BA) SETPLATE(PH3007BB) SETPLATE(PH3007BE) SETPLATE(PH3007BF) SETPLATE(PH3007BG) SETPLATE(PH3007BH)	1 1 1 1 1 1
38	854-8120-02	EX-LEAD(PH3007BA/B/E)	1
39	321-1007-00	CLAMP(PH3007BA/B/E)	1
40	737-2608-1B	SEMS SCREW(PH3007BA/B/E)	1
41	331-4135-00	HOLDER(PH3007BA/B/E)	1
42	285-1960-00	GUIDE LABEL	1
43	304-0480-09	LOWER CVR(PH3007BF/G/H)	1
44	347-7885-00	SPACER(PH3007BA/B/E)	1
45	347-7886-00	SPACER	1
46	347-7925-00	SPACER	1
47	347-8389-00	SHIELD FILM	1
48	345-5805-01	GASKET	1
49	816-4050-00	FLAT WIRE(6P)	1
50	331-4463-00	BRKT-HOLDER	2
51	714-2003-8B	MACHIN SCREW(M2x3)	2
52	347-8408-00	SPACER	1
53	039-3191-00	PWB(30P)	1
54	074-1059-80	OUTLET SOCKET	2
55	074-1138-56	OUTLET SOCKET	1
56	076-6016-56	PLUG	1
57	716-3545-00	SCREW(M2x4)	2
58	----------	SUB PWB	1
59	290-0048-01	LABEL(CN)(PH3007BF/G/H)	1
60	347-8526-00	SPACER	1

ELECTRICAL PARTS LIST

Main PWB(B1) section

REF No.	PART No.	DESCRIPTION
ANT101	092-2210-00	ANTENNA RECEPT
BL101	880-1920P	TUNER PACK
C101	168-1032-55	0.01uF K
C102	166-4701-50	47pF CH
C103	166-4701-50	47pF CH
C104	166-1007-50	10pF CH
C105	168-3332-78	0.033uF K
C106	166-6811-50	680pF
C107	168-3922-55	3900pF K
C108	168-1022-55	1000pF K
C109	168-1032-55	0.01uF K
C110	168-4732-78	0.047uF K
C111	168-1032-55	0.01uF K
C112	178-1052-78	1uF
C113	166-2201-50	22pF CH
C114	166-1801-50	18pF CH
C116	166-2201-50	22pF CH
C117	168-4732-78	0.047uF K
C118	168-2232-55	0.022uF K
C119	168-2232-55	0.022uF K
C120	166-9097-50	9pF CH
C121	166-9097-50	9pF CH
C122	168-2232-55	0.022uF K
C123	042-1788-90	16V 100uF
C124	168-2232-55	0.022uF K
C125	168-2232-55	0.022uF K
C126	042-1788-90	16V 100uF
C127	168-1042-78	16V 0.1uF
C128	168-1022-55	1000pF K
C129	168-2232-55	0.022uF K
C130	043-0563-90	16V 47uF
C131	166-1011-50	100pF CH
C132	042-1788-90	16V 100uF
C133	166-1011-50	100pF CH
C134	168-1042-78	16V 0.1uF
C135	166-1011-50	100pF CH
C136	166-1011-50	100pF CH
C138	166-2201-50	22pF CH
C139	178-1052-78	1uF
C140	178-2232-78	0.022uF
C141	168-1022-55	1000pF K
C142	043-0563-90	16V 47uF
C143	043-0547-50	16V 3.3uF
C144	168-2245-79	0.22uF Z
C145	168-3332-78	0.033uF K
C146	168-1042-78	16V 0.1uF
C147	168-2232-55	0.022uF K
C148	168-1032-55	0.01uF K
C149	043-0563-90	16V 47uF
C150	168-1032-55	0.01uF K
C151	168-6832-78	0.068uF K
C152	168-6832-78	0.068uF K
C153	168-3332-78	0.033uF K
C154	168-3322-55	3300pF K
C155	168-3332-78	0.033uF K
C156	168-3332-78	0.033uF K
C157	178-2255-79	2.2uF
C158	168-1532-55	0.015uF K(FOR PH3007BA/B/E/F)
	168-1032-55	0.01uF K (FOR PH3007BG/H)
C159	168-1532-55	0.015uF K(FOR PH3007BA/B/E/F)
	168-1032-55	0.01uF K (FOR PH3007BG/H)
C160	168-1232-55	0.012uF K(FOR PH3007BA/B/E/F)
	168-1032-55	0.01uF K (FOR PH3007BG/H)
C161	168-1232-55	0.012uF K(FOR PH3007BA/B/E/F)
	168-1032-55	0.01uF K (FOR PH3007BG/H)
C162	168-1042-78	16V 0.1uF
C163	178-2255-79	2.2uF
C164	168-1022-55	1000pF K
C165	168-1032-55	0.01uF K
C166	168-5612-55	560pF Z
C167	166-1801-50	18pF CH
C168	166-1801-50	18pF CH
C169	168-6832-78	0.068uF K
C170	168-3312-55	330pF K
C171	043-0548-50	10V 2.2uF
C172	168-1022-55	1000pF K
C182	178-1052-78	1uF
C185	168-1032-55	0.01uF K
C201	165-1063-35	16V 10uF
C202	165-1063-35	16V 10uF
C203	165-1063-35	16V 10uF
C204	165-1063-35	16V 10uF
C205	168-1042-78	16V 0.1uF
C206	168-1032-55	0.01uF K
C207	165-2253-65	50V 2.2uF
C208	165-2253-65	50V 2.2uF
C209	165-2253-65	50V 2.2uF
C210	165-2253-65	50V 2.2uF
C211	166-1011-50	100pF CH
C212	166-1011-50	100pF CH
C213	168-1022-55	1000pF K
C214	168-1022-55	1000pF K
C215	166-1011-50	100pF CH
C216	166-1011-50	100pF CH
C217	166-1011-50	100pF CH
C218	166-1011-50	100pF CH
C219	168-1042-78	16V 0.1uF
C220	166-1007-50	10pF CH
C221	166-1007-50	10pF CH
C222	168-1032-55	0.01uF K
C223	042-0474-90	16V 10uF
C224	042-0474-90	16V 10uF
C225	042-0474-90	16V 10uF
C226	042-0474-90	16V 10uF
C227	042-0474-90	16V 10uF
C228	042-0474-90	16V 10uF
C229	168-1042-78	16V 0.1uF
C230	168-1042-78	16V 0.1uF
C231	166-1011-50	100pF CH
C232	178-2255-79	2.2uF
C233	178-2255-79	2.2uF
C234	166-1011-50	100pF CH
C235	165-4763-35	16V 47uF
C236	042-1788-90	16V 100uF
C237	042-1790-90	16V 10uF
C238	042-1790-90	16V 10uF
C239	166-1007-50	10pF CH
C240	166-1011-50	100pF CH
C241	042-1736-90	16V 470uF M
C243	166-1011-50	100pF CH
C244	166-1007-50	10pF CH
C245	166-1007-50	10pF CH
C247	166-1007-50	10pF CH
C249	166-1007-50	10pF CH
C250	166-1007-50	10pF CH
C251	166-1007-50	10pF CH
C252	166-1007-50	10pF CH
C253	166-1011-50	100pF CH
C254	166-1011-50	100pF CH
C255	166-1011-50	100pF CH
C256	168-1032-55	0.01uF K
C257	165-4753-55	35V 4.7uF
C258	165-4753-55	35V 4.7uF
C259	178-2255-79	2.2uF
C260	178-2255-79	2.2uF
C261	178-2255-79	2.2uF
C262	178-2255-79	2.2uF
C263	178-2255-79	2.2uF
C264	178-2255-79	2.2uF
C265	166-1011-50	100pF CH
C267	168-1042-78	16V 0.1uF
C268	178-2255-79	2.2uF
C269	178-2255-79	2.2uF
C270	178-2255-79	2.2uF
C271	178-2255-79	2.2uF
C301	168-1032-55	0.01uF K
C314	042-1768-90	16V 10uF
C315	042-1768-90	16V 10uF
C316	042-1768-90	16V 10uF
C317	042-1768-90	16V 10uF
C318	042-1768-90	16V 10uF
C319	042-1768-90	16V 10uF
C320	042-1768-90	16V 10uF
C321	042-1768-90	16V 10uF
C322	042-1768-90	16V 10uF
C323	042-1768-90	16V 10uF
C324	042-1768-90	16V 10uF
C325	042-1768-90	16V 10uF
C326	166-1011-50	100pF CH
C331	168-1042-78	16V 0.1uF
C332	165-4763-35	16V 47uF
C333	168-1042-78	16V 0.1uF
C334	166-4711-50	470pF CH
C335	166-4711-50	470pF CH
C336	166-4711-50	470pF CH
C337	168-8212-55	820pF K
C338	168-8212-55	820pF K
C339	168-8212-55	820pF K
C340	168-8212-55	820pF K
C341	168-8212-55	820pF K
C342	168-8212-55	820pF K
C343	168-8212-55	820pF K
C344	166-4711-50	470pF CH
C345	168-8212-55	820pF K
C346	042-1790-90	16V 10uF
C347	042-1790-90	16V 10uF
C348	042-1790-90	16V 10uF
C349	042-1790-90	16V 10uF
C350	166-1011-50	100pF CH
C351	166-1011-50	100pF CH
C352	166-1011-50	100pF CH
C353	166-1011-50	100pF CH
C354	168-1042-78	16V 0.1uF
C358	166-1007-50	10pF CH
C359	166-1007-50	10pF CH
C360	166-1007-50	10pF CH
C361	166-1007-50	10pF CH
C362	166-1007-50	10pF CH
C363	166-1007-50	10pF CH
C368	168-3322-55	3300pF K
C369	168-3322-55	3300pF K
C370	168-2722-55	2700pF K
C371	168-2722-55	2700pF K
C372	168-2722-55	2700pF K
C373	168-2722-55	2700pF K
C401	168-1022-55	1000pF K
C402	178-2255-79	2.2uF
C403	165-1063-35	16V 10uF
C404	168-1032-55	0.01uF K
C405	168-1042-78	16V 0.1uF
C406	168-1022-55	1000pF K
C407	168-1042-78	16V 0.1uF
C408	168-1042-78	16V 0.1uF
C409	168-1042-78	16V 0.1uF
C410	168-1042-78	16V 0.1uF

REF No.	PART No.	DESCRIPTION
C411	166-2211-50	220pF CH
C412	166-1011-50	100pF CH
C413	178-1052-78	1uF
C414	166-6097-50	6pF CH
C415	166-6097-50	6pF CH
C416	168-1042-78	16V 0.1uF
C417	165-2253-65	50V 2.2uF
C418	168-2245-79	0.22uF Z
C419	168-1022-55	1000pF K
C420	166-1011-50	100pF CH
C421	168-1042-78	16V 0.1uF
C422	165-1063-35	16V 10uF
C423	166-1011-50	100pF CH
C424	166-5601-50	56pF CH
C425	168-1032-55	0.01uF K
C426	168-1022-55	1000pF K
C430	166-1511-50	150pF CH
C431	166-1011-50	100pF CH
C432	166-2201-50	22pF CH
C433	166-2201-50	22pF CH
C501	042-1674-00	10V 220uF
C502	165-4763-35	16V 47uF
C504	042-1790-90	16V 10uF
C505	042-1790-90	16V 10uF
C506	042-1790-90	16V 10uF
C507	042-1790-90	16V 10uF
C508	042-1790-90	16V 10uF
C509	042-1790-90	16V 10uF
C510	178-2255-79	2.2uF
C511	178-2255-79	2.2uF
C513	042-1674-00	10V 220uF
C514	042-1674-00	10V 220uF
C515	042-1674-00	10V 220uF
C516	166-2201-50	22pF CH
C517	166-2201-50	22pF CH
C518	166-2201-50	22pF CH
C519	166-2201-50	22pF CH
C520	166-2201-50	22pF CH
C521	166-2201-50	22pF CH
C522	166-2201-50	22pF CH
C523	166-2201-50	22pF CH
C524	166-2201-50	22pF CH
C525	166-2201-50	22pF CH
C526	166-2201-50	22pF CH
C527	166-2201-50	22pF CH
C528	042-1674-00	10V 220uF
C529	042-1674-00	10V 220uF
C530	042-1674-00	10V 220uF
C531	042-1674-00	10V 220uF
C532	042-1674-00	10V 220uF
C533	042-1674-00	10V 220uF
C534	166-2201-50	22pF CH
C535	166-2201-50	22pF CH
C536	166-2201-50	22pF CH
C537	166-2201-50	22pF CH
C538	166-2201-50	22pF CH
C539	166-2201-50	22pF CH
C540	166-2201-50	22pF CH
C541	166-2201-50	22pF CH
C542	166-2201-50	22pF CH
C543	166-2201-50	22pF CH
C544	166-2201-50	22pF CH
C545	166-2201-50	22pF CH
C546	042-1674-00	10V 220uF
C547	042-1674-00	10V 220uF
C548	042-1674-00	10V 220uF
C549	168-2222-55	2200pF K
C550	042-1674-00	10V 220uF
C551	043-0499-51	0.1uF
C552	165-1063-35	16V 10uF
C553	168-1032-55	0.01uF K
C554	168-1032-55	0.01uF K
C555	168-1032-55	0.01uF K

REF No.	PART No.	DESCRIPTION
C556	168-1032-55	0.01uF K
C557	168-1032-55	0.01uF K
C558	168-1032-55	0.01uF K
C559	168-2222-55	2200pF K
C560	168-2222-55	2200pF K
C561	168-2222-55	2200pF K
C562	168-2222-55	2200pF K
C563	168-2222-55	2200pF K
C564	168-2222-55	2200pF K
C565	168-2222-55	2200pF K
C567	168-2222-55	2200pF K
C568	168-2222-55	2200pF K
C577	043-0499-51	0.1uF
C578	166-1007-50	10pF CH
C579	166-1007-50	10pF CH
C580	043-0506-50	0.1uF
C581	043-0506-50	0.1uF
C582	178-2255-79	2.2uF
C583	178-2255-79	2.2uF
C601	165-2263-35	16V 22uF
C602	168-1032-55	0.01uF K
C603	042-1761-90	35V 22uF M
C604	168-1042-78	16V 0.1uF
C606	165-1063-35	16V 10uF
C611	178-3342-78	0.33uF
C612	042-1788-90	16V 100uF
C613	042-1789-90	35V 22uF
C614	168-1042-78	16V 0.1uF
C616	042-1789-90	35V 22uF
C617	178-3342-78	0.33uF
C618	042-1788-90	16V 100uF
C619	042-0579-50	16V 47uF
C620	168-1042-78	16V 0.1uF
C621	165-4743-65	50V 0.47uF
C622	042-1675-00	16V 3300uF
C623	042-1788-90	16V 100uF
C625	168-1042-78	16V 0.1uF
C626	043-0506-50	0.1uF
C627	043-0506-50	0.1uF
C628	042-0579-50	16V 47uF
C629	178-3342-78	0.33uF
C630	042-0579-51	16V 10uF
C632	042-1737-90	6.3V 1000uF M
C633	166-1011-50	100pF CH
C634	165-2253-65	50V 2.2uF
C637	168-1032-55	0.01uF K
C638	168-1032-55	0.01uF K
C639	168-1042-78	16V 0.1uF
CCT101	050-0145-52	1/16W 1k ohm x4
CCT201	050-0145-52	1/16W 1k ohm x4
CCT202	050-0145-55	1/16W 10k ohm x4
CCT203	050-0145-55	1/16W 10k ohm x4
CCT403	050-0145-55	1/16W 10k ohm x4
CCT404	050-0146-53	1/16W 100k ohm x2J
CCT405	050-0146-54	1/16W 47k ohm x2J
CCT406	050-0146-53	1/16W 100k ohm x2J
D101	001-3205-90	1SV251
D102	001-3205-90	1SV251
D103	001-2403-90	M1F60
D104	001-0354-91	MA151WK
D201	001-0516-90	MA111
D202	001-0529-69	MA8180-M
D203	001-0516-90	MA111
D204	001-0529-32	MA8056-M
D205	001-0529-32	MA8056-M
D206	001-9210-50	AVR-M1608C270MT AAD
D207	001-9210-50	AVR-M1608C270MT AAD
D208	001-9210-50	AVR-M1608C270MT AAD
D209	001-9210-50	AVR-M1608C270MT AAD

REF No.	PART No.	DESCRIPTION
D401	001-0529-36	MA8062-H
D403	001-0529-32	MA8056-M
D404	001-0529-32	MA8056-M
D405	001-0529-43	MA8082-L
D407	001-0516-90	MA111
D408	001-0516-90	MA111
D409	001-0516-90	MA111
D410	001-0529-32	MA8056-M
D411	001-0529-57	MA8120-H
D412	001-0516-90	MA111
D420	001-4101-95	U1ZB27-TE12R
D423	001-0529-38	MA8068-M
D424	001-0354-91	MA151WK
D503	001-2403-90	M1F60
D504	001-2403-90	M1F60
D505	001-2403-90	M1F60
D507	001-2403-90	M1F60
D508	001-2403-90	M1F60
D601	001-2403-90	M1F60
D602	001-4309-01	HZK11C
D603	001-4309-00	HZK11A
D604	001-0529-32	MA8056-M
D607	001-0516-90	MA111
D608	001-0377-57	MA4120H
D609	001-0516-90	MA111
D610	001-0516-90	MA111
D611	001-0504-39	HZS7 B2L
D612	001-2015-00	RL253
D616	001-0354-91	MA151WK
D619	001-0529-45	MA8082-H
D620	001-2403-90	M1F60
D621	001-4310-00	RLZ TE-11 9.1B
D623	001-0516-90	MA111
D624	001-0535-90	MA729
D627	001-0516-90	MA111
IC101	051-4603-90	TA2083FN
IC102	051-6201-90	LC72146M
IC103	051-4618-90	HA12181FP-EL-E
IC104	051-7100-08	TC4W66F-TE12L
IC105	051-4607-90	SAA6581T
IC201	051-3019-90	NJM2060V
IC202	051-3020-90	NJM4565V
IC203	051-6600-38	CA0008AM
IC204	051-7709-90	TC9273F-004EL
IC205	051-3020-90	NJM4565V
IC206	051-3019-90	NJM2060V
IC301	051-7511-38	TC74LCX07FTEL
IC305	051-1292-90	NJM4565M-D
IC306	051-3050-90	OPA2277UA
IC307	051-3051-90	OPA4277UA
IC401	051-6644-90	ADM483EAR
IC402	051-7100-08	TC4W66F-TE12L
IC403	051-9415-68	BR93L66F-WTR
IC404	052-3190-53	uPD70F3036HYGC -8EU-A(FOR PN3007BA/B/E)
	052-3190-73	uPD70F3035BYGC -8EU-A(FOR PN3007BF/G/H)
IC405	051-5438-38	BD4830G-TR
IC406	051-7232-38	CD74HC4066M96
IC501	051-1292-90	NJM4565M-D
IC502	051-3026-90	NJM4580V
IC503	051-3026-90	NJM4580V
IC504	051-3026-90	NJM4580V
IC505	051-3026-90	NJM4580V
IC506	051-3026-90	NJM4580V
IC507	051-3026-90	NJM4580V
IC602	051-3342-90	BA05CC0WFP-004E L
IC603	051-3335-90	AN77L04M
IC604	051-3339-90	AN77L08M-E1
J201	074-1168-14	OUTLET SOCKET

REF No.	PART No.	DESCRIPTION
J301	074-1287-80	30P
J501	074-1166-01	OUTLET SOCKET
L101	010-2174-83	560uH
L102	010-3406-38	0.1uH J
L103	010-3407-59	5.6uH J
L104	010-2003-04	30uH
L105	010-3407-75	120uH J
L106	010-3052-78	220uH
L107	010-3100-55	0.27uH
L108	010-3052-78	220uH
L109	010-3104-54	600 ohm/100MHz
L110	010-3104-54	600 ohm/100MHz
L111	010-3104-54	600 ohm/100MHz
L112	010-3108-53	330 ohm/100MHz
L201	010-3052-74	100uH
L401	010-3406-50	1uH J
L402	010-3407-54	2.2uH J
L403	010-3407-67	27uH J
L602	010-3108-53	330 ohm/100MHz
P501	076-0368-14	14P
P502	076-0368-14	14P
P801	076-6001-56	6P
P901	076-3011-70	20P
Q101	192-4116-00	2SC4116
Q102	125-2032-92	RN1302
Q103	192-4116-00	2SC4116
Q104	125-2032-93	RN1303
Q105	190-1298-00	2SA1298
Q106	190-1298-00	2SA1298
Q107	125-2032-93	RN1303
Q123	193-0601-00	2SD601A
Q201	192-2712-00	2SC2712
Q402	192-2712-00	2SC2712
Q404	125-9015-93	RN4903
Q405	192-2712-00	2SC2712
Q407	125-2025-92	IMH11
Q408	125-9003-93	IMD2
Q409	190-1162-00	2SA1162
Q412	190-1162-00	2SA1162
Q414	125-2004-93	RN1403
Q415	125-2004-93	RN1403
Q419	192-2712-00	2SC2712
Q420	190-1162-00	2SA1162
Q601	125-2004-93	RN1403
Q602	190-2070-00	2SA2070 TE12L
Q603	192-5810-00	2SC5810 TE12L
Q604	125-9003-92	IMD3
Q605	125-9003-92	IMD3
Q607	192-5810-00	2SC5810 TE12L
Q608	103-1705-00	2SD1705
Q610	192-2712-50	2SC2712 Y,G,L
Q611	125-2004-96	RN1406
Q612	190-1736-00	2SA1736
Q613	125-2004-93	RN1403
Q614	190-1298-00	2SA1298
Q615	192-5810-00	2SC5810 TE12L
Q616	193-1802-61	2SD1802FA R,S,T
Q617	125-2004-93	RN1403
Q618	125-0002-93	RN2403
Q620	193-1802-61	2SD1802FA R,S,T
Q622	103-1705-00	2SD1705
Q623	125-2004-93	RN1403
Q624	190-1736-00	2SA1736
Q625	103-2012-00	2SD2012
Q626	125-9003-92	IMD3
Q627	125-2004-93	RN1403
Q628	190-1298-00	2SA1298
Q629	193-1626-00	2SD1626
Q630	192-2712-50	2SC2712 Y,G,L
Q631	125-0002-95	RN2405
Q632	192-2712-50	2SC2712 Y,G,L
Q633	192-5810-00	2SC5810 TE12L
Q634	192-5810-00	2SC5810 TE12L

REF No.	PART No.	DESCRIPTION
Q635	125-9003-92	IMD3
Q636	190-1162-00	2SA1162
Q637	125-9003-92	IMD3
Q638	190-2070-00	2SA2070 TE12L
Q639	192-2712-50	2SC2712 Y,G,L
R101	119-8201-15	1/10W 82 ohm
R102	119-1031-15	1/10W 10k ohm
R103	119-1021-15	1/10W 1k ohm
R104	119-1021-15	1/10W 1k ohm
R105	119-4741-15	1/10W 470k ohm
R106	119-4741-15	1/10W 470k ohm
R107	119-4741-15	1/10W 470k ohm
R108	119-1031-15	1/10W 10k ohm
R109	119-1031-15	1/10W 10k ohm
R110	119-0000-05	1/10W 0 ohm JW
R111	119-1031-15	1/10W 10k ohm
R112	119-2231-15	1/10W 22k ohm
R114	119-0000-05	1/10W 0 ohm JW
R116	119-2221-15	1/10W 2.2k ohm
R117	119-1041-15	1/10W 100k ohm
R119	119-4721-15	1/10W 4.7k ohm
R120	119-0000-05	1/10W 0 ohm JW
R122	119-4721-15	1/10W 4.7k ohm
R123	119-0000-05	1/10W 0 ohm JW
R124	119-3321-15	1/10W 3.3k ohm
R125	119-0000-05	1/10W 0 ohm JW
R127	119-2211-15	1/10W 220 ohm
R128	119-2221-15	1/10W 2.2k ohm
R129	119-2231-15	1/10W 22k ohm
R130	119-4731-15	1/10W 47k ohm
R131	119-1031-15	1/10W 10k ohm
R133	119-1221-15	1/10W 1.2k ohm
R134	119-1221-15	1/10W 1.2k ohm
R135	119-1031-15	1/10W 10k ohm
R136	119-1831-15	1/10W 18k ohm
R137	119-1021-15	1/10W 1k ohm
R138	119-1021-15	1/10W 1k ohm
R140	119-1041-15	1/10W 100k ohm
R141	119-4731-15	1/10W 47k ohm
R142	119-1231-15	1/10W 12k ohm
R143	119-2731-15	1/10W 27k ohm
R146	119-5621-15	1/10W 5.6k ohm
R147	119-2421-15	1/10W 2.4k ohm
R148	119-2421-15	1/10W 2.4k ohm
R149	116-1021-15	1/4W 1k ohm
R150	116-1021-15	1/4W 1k ohm
R151	119-3921-15	1/10W 3.9k ohm
R152	119-3921-15	1/10W 3.9k ohm
R154	119-1841-15	1/10W 180k ohm
R155	119-0000-05	1/10W 0 ohm JW
R157	119-0000-05	1/10W 0 ohm JW
R158	116-4711-15	1/4W 470 ohm
R159	116-8211-15	1/4W 820 ohm
R163	119-1031-15	1/10W 10k ohm
R164	119-1031-15	1/10W 10k ohm
R166	119-2221-15	1/10W 2.2k ohm
R201	032-0140-50	1/10W 10k ohm F
R202	119-1021-15	1/10W 1k ohm
R203	119-1031-15	1/10W 10k ohm
R204	119-1031-15	1/10W 10k ohm
R205	119-1031-15	1/10W 10k ohm
R206	119-1031-15	1/10W 10k ohm
R207	119-1031-15	1/10W 10k ohm
R208	116-1211-15	1/4W 120 ohm
R209	116-6801-15	1/4W 68 ohm
R210	116-1011-15	1/4W 100 ohm
R211	116-1011-15	1/4W 100 ohm
R212	119-1831-15	1/10W 18k ohm
R213	119-1831-15	1/10W 18k ohm
R214	032-0140-50	1/10W 10k ohm F
R215	119-2231-15	1/10W 22k ohm
R216	119-2711-15	1/10W 270 ohm
R217	119-2711-15	1/10W 270 ohm

REF No.	PART No.	DESCRIPTION
R218	119-1031-15	1/10W 10k ohm
R219	119-1031-15	1/10W 10k ohm
R220	032-0140-50	1/10W 10k ohm F
R221	032-0140-50	1/10W 10k ohm F
R222	032-0140-50	1/10W 10k ohm F
R223	032-0140-50	1/10W 10k ohm F
R224	119-2231-15	1/10W 22k ohm
R225	119-5621-15	1/10W 5.6k ohm
R226	119-5621-15	1/10W 5.6k ohm
R227	119-1031-15	1/10W 10k ohm
R228	119-1031-15	1/10W 10k ohm
R229	032-0140-50	1/10W 10k ohm F
R230	119-1031-15	1/10W 10k ohm
R231	119-0000-05	1/10W 0 ohm JW
R233	119-1031-15	1/10W 10k ohm
R234	032-0140-50	1/10W 10k ohm F
R236	119-0000-05	1/10W 0 ohm JW
R237	119-0000-05	1/10W 0 ohm JW
R238	119-0000-05	1/10W 0 ohm JW
R239	119-3921-15	1/10W 3.9k ohm
R240	119-1831-15	1/10W 18k ohm
R241	119-1831-15	1/10W 18k ohm
R242	119-3921-15	1/10W 3.9k ohm
R243	119-2731-15	1/10W 27k ohm
R244	119-1031-15	1/10W 10k ohm
R245	119-1031-15	1/10W 10k ohm
R246	119-1041-15	1/10W 100k ohm
R247	119-1041-15	1/10W 100k ohm
R248	119-1041-15	1/10W 100k ohm
R249	119-1041-15	1/10W 100k ohm
R250	119-1041-15	1/10W 100k ohm
R251	119-1041-15	1/10W 100k ohm
R252	119-1041-15	1/10W 100k ohm
R253	119-1041-15	1/10W 100k ohm
R254	119-1041-15	1/10W 100k ohm
R255	119-1041-15	1/10W 100k ohm
R256	119-1041-15	1/10W 100k ohm
R257	119-1041-15	1/10W 100k ohm
R258	119-1031-15	1/10W 10k ohm
R259	119-1031-15	1/10W 10k ohm
R261	119-1041-15	1/10W 100k ohm
R262	119-1041-15	1/10W 100k ohm
R263	119-3901-15	1/10W 39 ohm
R264	119-3901-15	1/10W 39 ohm
R265	119-5621-15	1/10W 5.6k ohm
R266	119-5621-15	1/10W 5.6k ohm
R267	119-1031-15	1/10W 10k ohm
R268	119-1031-15	1/10W 10k ohm
R269	116-2221-15	1/4W 2.2k ohm
R270	119-2221-15	1/10W 2.2k ohm
R272	119-1031-15	1/10W 10k ohm
R274	119-1031-15	1/10W 10k ohm
R275	119-2431-15	1/10W 24k ohm
R276	119-8221-15	1/10W 8.2k ohm
R277	119-8221-15	1/10W 8.2k ohm
R303	119-3321-15	1/10W 3.3k ohm
R304	119-3321-15	1/10W 3.3k ohm
R317	119-4721-15	1/10W 4.7k ohm
R318	119-4721-15	1/10W 4.7k ohm
R319	119-4721-15	1/10W 4.7k ohm
R320	119-4721-15	1/10W 4.7k ohm
R321	119-4721-15	1/10W 4.7k ohm
R322	119-4721-15	1/10W 4.7k ohm
R323	119-4721-15	1/10W 4.7k ohm
R324	119-4721-15	1/10W 4.7k ohm
R325	119-4721-15	1/10W 4.7k ohm
R326	119-4721-15	1/10W 4.7k ohm
R327	119-4721-15	1/10W 4.7k ohm
R328	119-4721-15	1/10W 4.7k ohm
R329	119-1031-15	1/10W 10k ohm
R330	119-1031-15	1/10W 10k ohm
R338	119-4721-15	1/10W 4.7k ohm
R339	119-4721-15	1/10W 4.7k ohm

REF No.	PART No.	DESCRIPTION
R340	119-4721-15	1/10W 4.7k ohm
R341	119-4721-15	1/10W 4.7k ohm
R342	119-4721-15	1/10W 4.7k ohm
R343	119-4721-15	1/10W 4.7k ohm
R344	119-4721-15	1/10W 4.7k ohm
R345	119-4721-15	1/10W 4.7k ohm
R346	119-4721-15	1/10W 4.7k ohm
R347	119-4721-15	1/10W 4.7k ohm
R348	119-4721-15	1/10W 4.7k ohm
R349	119-4721-15	1/10W 4.7k ohm
R350	119-3901-15	1/10W 39 ohm
R351	119-3901-15	1/10W 39 ohm
R352	119-3901-15	1/10W 39 ohm
R353	119-3901-15	1/10W 39 ohm
R354	119-1811-15	1/10W 180 ohm
R355	119-1811-15	1/10W 180 ohm
R356	119-1811-15	1/10W 180 ohm
R357	119-1811-15	1/10W 180 ohm
R358	119-5611-15	1/10W 560 ohm
R359	119-5611-15	1/10W 560 ohm
R360	119-5611-15	1/10W 560 ohm
R361	119-5611-15	1/10W 560 ohm
R362	119-5611-15	1/10W 560 ohm
R363	119-5611-15	1/10W 560 ohm
R364	119-5611-15	1/10W 560 ohm
R365	119-5611-15	1/10W 560 ohm
R366	119-9121-15	1/10W 9.1k ohm
R367	119-9121-15	1/10W 9.1k ohm
R368	119-9121-15	1/10W 9.1k ohm
R369	119-9121-15	1/10W 9.1k ohm
R370	119-1041-15	1/10W 100k ohm
R371	119-1041-15	1/10W 100k ohm
R372	119-1041-15	1/10W 100k ohm
R373	119-1041-15	1/10W 100k ohm
R374	119-1041-15	1/10W 100k ohm
R375	119-1041-15	1/10W 100k ohm
R376	119-1041-15	1/10W 100k ohm
R377	119-1041-15	1/10W 100k ohm
R378	119-1041-15	1/10W 100k ohm
R379	119-1041-15	1/10W 100k ohm
R380	119-1041-15	1/10W 100k ohm
R381	119-1041-15	1/10W 100k ohm
R382	119-1041-15	1/10W 100k ohm
R383	119-1041-15	1/10W 100k ohm
R384	119-1041-15	1/10W 100k ohm
R385	119-1041-15	1/10W 100k ohm
R402	119-2231-15	1/10W 22k ohm
R403	119-2731-15	1/10W 27k ohm
R404	119-3331-15	1/10W 33k ohm
R406	119-1041-15	1/10W 100k ohm
R407	119-2231-15	1/10W 22k ohm
R409	119-4731-15	1/10W 47k ohm
R411	116-1011-15	1/4W 100 ohm
R413	119-1031-15	1/10W 10k ohm
R416	119-1031-15	1/10W 10k ohm
R418	119-2241-15	1/10W 220k ohm
R419	119-4731-15	1/10W 47k ohm
R420	119-1041-15	1/10W 100k ohm
R421	119-1041-15	1/10W 100k ohm
R422	119-1041-15	1/10W 100k ohm
R423	119-1041-15	1/10W 100k ohm
R424	119-1021-15	1/10W 1k ohm
R425	119-4731-15	1/10W 47k ohm
R426	119-1041-15	1/10W 100k ohm
R427	119-4741-15	1/10W 470k ohm
R429	119-1041-15	1/10W 100k ohm
R431	119-1041-15	1/10W 100k ohm
R432	119-1031-15	1/10W 10k ohm
R433	119-1021-15	1/10W 1k ohm
R434	119-1021-15	1/10W 1k ohm
R439	119-1041-15	1/10W 100k ohm
R440	119-4721-15	1/10W 4.7k ohm
R442	119-1021-15	1/10W 1k ohm

REF No.	PART No.	DESCRIPTION
R443	119-0000-05	1/10W 0 ohm JW
R444	119-1021-15	1/10W 1k ohm
R445	119-1021-15	1/10W 1k ohm
R446	119-1021-15	1/10W 1k ohm
R447	119-1021-15	1/10W 1k ohm
R449	119-1051-15	1/10W 1M ohm
R450	119-1021-15	1/10W 1k ohm
R451	119-1021-15	1/10W 1k ohm
R452	119-1041-15	1/10W 100k ohm
R455	116-1811-15	1/4W 180 ohm
R456	116-1021-15	1/4W 1k ohm
R457	119-1021-15	1/10W 1k ohm
R458	119-0000-05	1/10W 0 ohm JW
R459	119-1041-15	1/10W 100k ohm
R460	119-1021-15	1/10W 1k ohm
R461	116-2231-15	1/4W 22k ohm
R462	116-2231-15	1/4W 22k ohm
R463	119-4721-15	1/10W 4.7k ohm
R464	119-4721-15	1/10W 4.7k ohm
R465	116-8201-15	1/4W 82 ohm
R467	119-0000-05	1/10W 0 ohm JW
R471	119-1021-15	1/10W 1k ohm
R472	119-1041-15	1/10W 100k ohm
R473	119-1041-15	1/10W 100k ohm
R474	119-1031-15	1/10W 10k ohm
R475	116-0000-05	1/4W 0 ohm
R478	119-2721-15	1/10W 2.7k ohm
R479	119-3321-15	1/10W 3.3k ohm
R480	119-1031-15	1/10W 10k ohm
R482	116-1521-15	1/4W 1.5k ohm
R484	119-0000-05	1/10W 0 ohm JW
R487	119-1041-15	1/10W 100k ohm
R490	119-1041-15	1/10W 100k ohm
R491	119-4721-15	1/10W 4.7k ohm
R493	119-0000-05	1/10W 0 ohm JW
R497	119-0000-05	1/10W 0 ohm JW
R499	119-6821-15	1/10W 6.8k ohm
R502	119-1031-15	1/10W 10k ohm
R503	119-1031-15	1/10W 10k ohm
R505	119-5621-15	1/10W 5.6k ohm
R507	119-5621-15	1/10W 5.6k ohm
R508	119-5621-15	1/10W 5.6k ohm
R510	119-5621-15	1/10W 5.6k ohm
R511	119-5621-15	1/10W 5.6k ohm
R513	119-5621-15	1/10W 5.6k ohm
R518	119-3321-15	1/10W 3.3k ohm
R519	119-3321-15	1/10W 3.3k ohm
R520	119-3321-15	1/10W 3.3k ohm
R521	119-3321-15	1/10W 3.3k ohm
R522	119-3321-15	1/10W 3.3k ohm
R523	119-3321-15	1/10W 3.3k ohm
R533	119-2231-15	1/10W 22k ohm
R534	119-3931-15	1/10W 39k ohm
R535	119-1001-15	1/10W 10 ohm
R536	119-2231-15	1/10W 22k ohm
R537	119-3931-15	1/10W 39k ohm
R538	119-1001-15	1/10W 10 ohm
R539	119-2231-15	1/10W 22k ohm
R540	119-3931-15	1/10W 39k ohm
R541	119-1001-15	1/10W 10 ohm
R542	119-1531-15	1/10W 15k ohm
R543	119-1531-15	1/10W 15k ohm
R544	119-1531-15	1/10W 15k ohm
R545	119-1031-15	1/10W 10k ohm
R546	119-1031-15	1/10W 10k ohm
R547	119-1031-15	1/10W 10k ohm
R548	119-2231-15	1/10W 22k ohm
R549	119-1001-15	1/10W 10 ohm
R550	119-2231-15	1/10W 22k ohm
R551	119-1001-15	1/10W 10 ohm
R552	119-2231-15	1/10W 22k ohm
R553	119-1001-15	1/10W 10 ohm
R554	119-1001-15	1/10W 10 ohm

REF No.	PART No.	DESCRIPTION
R555	119-2231-15	1/10W 22k ohm
R556	119-3931-15	1/10W 39k ohm
R557	119-2231-15	1/10W 22k ohm
R558	119-3931-15	1/10W 39k ohm
R559	119-1001-15	1/10W 10 ohm
R560	119-2231-15	1/10W 22k ohm
R561	119-3931-15	1/10W 39k ohm
R562	119-1001-15	1/10W 10 ohm
R563	119-1531-15	1/10W 15k ohm
R564	119-1531-15	1/10W 15k ohm
R565	119-1531-15	1/10W 15k ohm
R566	119-1031-15	1/10W 10k ohm
R567	119-1031-15	1/10W 10k ohm
R568	119-1031-15	1/10W 10k ohm
R569	119-2231-15	1/10W 22k ohm
R570	119-1001-15	1/10W 10 ohm
R571	119-2231-15	1/10W 22k ohm
R572	119-1001-15	1/10W 10 ohm
R573	119-2231-15	1/10W 22k ohm
R574	119-1001-15	1/10W 10 ohm
R575	032-0145-71	1/4W 2.2k ohm
R576	119-0000-05	1/10W 0 ohm JW
R578	116-3901-15	1/4W 39 ohm
R579	116-1011-15	1/4W 100 ohm
R581	116-3901-15	1/4W 39 ohm
R601	116-1521-15	1/4W 1.5k ohm
R602	119-4731-15	1/10W 47k ohm
R603	116-1021-15	1/4W 1k ohm
R605	116-3321-15	1/4W 3.3k ohm
R606	116-3311-15	1/4W 330 ohm
R607	119-4731-15	1/10W 47k ohm
R608	116-3321-15	1/4W 3.3k ohm
R609	116-6811-15	1/4W 680 ohm
R610	119-1031-15	1/10W 10k ohm
R611	119-1221-15	1/10W 1.2k ohm
R612	032-0145-71	1/4W 2.2k ohm
R613	119-1031-15	1/10W 10k ohm
R614	119-4731-15	1/10W 47k ohm
R615	032-0145-63	1/4W 390ohm
R616	119-1221-15	1/10W 1.2k ohm
R617	116-1821-15	1/4W 1.8k ohm
R618	116-1821-15	1/4W 1.8k ohm
R619	116-1821-15	1/4W 1.8k ohm
R620	116-2221-15	1/4W 2.2k ohm
R621	032-0145-60	1/2W 220 ohm J
R622	119-3931-15	1/10W 39k ohm
R623	116-0000-05	1/4W 0 ohm
R624	116-0000-05	1/4W 0 ohm
R625	114-1511-11	1W 150 ohm
R627	116-2221-15	1/4W 2.2k ohm
R628	119-4731-15	1/10W 47k ohm
R629	119-1531-15	1/10W 15k ohm
R630	116-4731-15	1/4W 47k ohm
R632	116-4721-15	1/4W 4.7k ohm
R633	119-1031-15	1/10W 10k ohm
R635	119-1031-15	1/10W 10k ohm
R636	116-1021-15	1/4W 1k ohm
R637	119-2221-15	1/10W 2.2k ohm
R639	116-8211-15	1/4W 820 ohm
R640	116-3911-15	1/4W 390 ohm
R641	116-2221-15	1/4W 2.2k ohm
R642	116-1821-15	1/4W 1.8k ohm
R643	116-1821-15	1/4W 1.8k ohm
R646	116-6811-15	1/4W 680 ohm
R647	116-6811-15	1/4W 680 ohm
R648	116-6811-15	1/4W 680 ohm
R649	119-1031-15	1/10W 10k ohm
R650	116-6811-15	1/4W 680 ohm
R651	116-6811-15	1/4W 680 ohm
R652	116-1821-15	1/4W 1.8k ohm
R653	119-2231-15	1/10W 22k ohm
R654	116-2221-15	1/4W 2.2k ohm
R655	119-1031-15	1/10W 10k ohm

REF No.	PART No.	DESCRIPTION
R656	119-1031-15	1/10W 10k ohm
SUP101	060-0122-20	DSP-141N-S00B
SUP102	060-0122-20	DSP-141N-S00B
T601	009-0670-80	180uH
TH602	002-0318-21	THERMISTOR

REF No.	PART No.	DESCRIPTION
TH604	002-0318-20	1206L020YR
TM401	073-0791-90	TERMINAL
TM501	073-0762-90	TERMINAL
VR101	012-6009-65	470k ohm B VR
X101	061-3553-90	7.2MHz

REF No.	PART No.	DESCRIPTION
X102	061-3552-90	4.33MHz
X501	061-3539-90	12.5MHz
PWB	039-3185-00	PWB(WITHOUT COMPONENT)

Switch PWB(B2) section

REF No.	PART No.	DESCRIPTION
C701	168-1042-78	16V 0.1uF
C703	168-1042-78	16V 0.1uF
C704	166-1011-50	100pF CH
C705	166-1011-50	100pF CH
C706	166-1011-50	100pF CH
C707	166-1011-50	100pF CH
C708	166-1011-50	100pF CH
C709	166-1011-50	100pF CH
C710	166-1011-50	100pF CH
CCT701	050-0145-52	1/16W 1k ohm x4
D701	001-7043-91	CL-170UR U-RED
D702	001-0516-90	MA111
D703	001-0516-90	MA111
D704	001-0516-90	MA111
D705	001-0516-90	MA111
D710	001-0516-90	MA111
D711	001-0516-90	MA111
D712	001-0516-90	MA111
D713	001-0516-90	MA111
D714	001-7079-90	BRBG1204W-TR
D715	001-2630-90	1SS420-TPL3,F
D716	001-2630-90	1SS420-TPL3,F
D717	001-2630-90	1SS420-TPL3,F
D718	001-2630-90	1SS420-TPL3,F
D720	001-2630-90	1SS420-TPL3,F
D721	001-2630-90	1SS420-TPL3,F
D722	001-2630-90	1SS420-TPL3,F
D723	001-2630-90	1SS420-TPL3,F
D724	001-2630-90	1SS420-TPL3,F
D725	001-2630-90	1SS420-TPL3,F
D726	001-2630-90	1SS420-TPL3,F
D727	001-2630-90	1SS420-TPL3,F
D728	001-2630-90	1SS420-TPL3,F
D729	001-2630-90	1SS420-TPL3,F
D730	001-2630-90	1SS420-TPL3,F
D731	001-2630-90	1SS420-TPL3,F
IC701	051-6655-90	R8A66150SP-DF0Z
J701	074-3014-70	SOCKET(20P)
L701	010-3105-62	1k ohm/100MHz
P702	076-6000-63	13P

REF No.	PART No.	DESCRIPTION
PL901	017-0433-94	14V 40mA BLUE
PL902	017-0433-94	14V 40mA BLUE
PL903	017-0433-94	14V 40mA BLUE
PL904	017-0433-94	14V 40mA BLUE
PL905	017-0433-94	14V 40mA BLUE
PL906	017-0433-94	14V 40mA BLUE
PL907	017-0433-94	14V 40mA BLUE
PL908	017-0433-94	14V 40mA BLUE
PL909	017-0433-94	14V 40mA BLUE
PL910	017-0433-94	14V 40mA BLUE
PL911	017-0433-94	14V 40mA BLUE
PL912	017-0433-94	14V 40mA BLUE
PL913	017-0433-94	14V 40mA BLUE
PL914	017-0433-94	14V 40mA BLUE
PL915	017-0433-94	14V 40mA BLUE
Q701	125-0002-92	RN2402
Q702	125-0002-92	RN2402
R701	119-4721-15	1/10W 4.7k ohm
R702	119-4721-15	1/10W 4.7k ohm
R703	119-4721-15	1/10W 4.7k ohm
R709	116-1811-15	1/4W 180 ohm
R710	119-1041-15	1/10W 100k ohm
R711	119-1041-15	1/10W 100k ohm
R712	116-1811-15	1/4W 180 ohm
R713	119-1041-15	1/10W 100k ohm
R714	119-1041-15	1/10W 100k ohm
R715	119-1041-15	1/10W 100k ohm
R716	119-0000-05	1/10W 0 ohm JW
R717	119-0000-05	1/10W 0 ohm JW
R718	119-0000-05	1/10W 0 ohm JW
R719	119-0000-05	1/10W 0 ohm JW
R720	119-0000-05	1/10W 0 ohm JW
R721	119-0000-05	1/10W 0 ohm JW
R722	119-0000-05	1/10W 0 ohm JW
R723	119-0000-05	1/10W 0 ohm JW
R724	119-0000-05	1/10W 0 ohm JW
R727	119-0000-05	1/10W 0 ohm JW
R728	119-0000-05	1/10W 0 ohm JW
R735	119-0000-05	1/10W 0 ohm JW
R737	119-0000-05	1/10W 0 ohm JW

REF No.	PART No.	DESCRIPTION
R738	119-0000-05	1/10W 0 ohm JW
S701	013-6202-52	SKPMBJE010
S702	013-6202-52	SKPMBJE010
S703	013-6202-52	SKPMBJE010
S704	013-6203-51	TACT SWITCH
S705	013-6203-51	TACT SWITCH
S706	013-6202-52	SKPMBJE010
S707	013-6203-51	TACT SWITCH
S708	013-6203-51	TACT SWITCH
S709	013-6203-51	TACT SWITCH
S710	013-6201-52	SKPMAP010
S711	013-6202-52	SKPMBJE010
S712	013-6201-52	SKPMAP010
S713	013-6202-52	SKPMBJE010
S714	013-6203-51	TACT SWITCH
S715	013-6201-52	SKPMAP010
S716	013-6201-52	SKPMAP010
S717	013-6201-52	SKPMAP010
S718	013-6201-52	SKPMAP010
S719	013-6201-52	SKPMAP010
S720	013-6202-52	SKPMBJE010
S721	013-6201-52	SKPMAP010
S722	013-6202-52	SKPMBJE010
S723	013-6202-52	SKPMBJE010
S724	013-6201-52	SKPMAP010
S725	013-6201-52	SKPMAP010
S726	013-6203-51	TACT SWITCH
S727	013-6203-51	TACT SWITCH
S728	013-6203-51	TACT SWITCH
S729	013-6203-51	TACT SWITCH
S730	013-6203-51	TACT SWITCH
S731	013-6203-51	TACT SWITCH
VR701	016-0025-03	VR W/SHAFT(FOR PH3007BA/B/E)
	016-0025-05	VR W/SHAFT (FOR PH3007BF/G/H)
PWB	039-3188-00	PWB(WITHOUT COMPONENT)

CN PWB(B3) section

REF No.	PART No.	DESCRIPTION
C801	168-2222-55	2200pF K
C802	168-2222-55	2200pF K
C803	168-2222-55	2200pF K
C804	168-2222-55	2200pF K
C805	168-2222-55	2200pF K
C806	168-2222-55	2200pF K
C807	166-5601-50	56pF CH
D801	001-2403-90	M1F60
D804	001-2403-90	M1F60
D805	001-0529-57	MA8120-H

REF No.	PART No.	DESCRIPTION
D806	001-0529-57	MA8120-H
D807	001-0529-57	MA8120-H
D808	001-0529-57	MA8120-H
D809	001-0529-57	MA8120-H
J801	074-4025-32	SOCKET(36P)
J802	074-0898-14	14P
J803	074-0898-14	14P
Q801	125-2024-95	RN1605
Q802	125-2004-91	RN1401
Q803	125-2024-95	RN1605

REF No.	PART No.	DESCRIPTION
R801	116-1011-15	1/4W 100 ohm
R802	116-1011-15	1/4W 100 ohm
R803	116-1011-15	1/4W 100 ohm
R804	116-1011-15	1/4W 100 ohm
R805	116-1011-15	1/4W 100 ohm
TH601	002-0318-20	1206L020YR
PWB	039-3189-00	PWB(WITHOUT COMPONENT)

Sub PWB(B4) section

REF No.	PART No.	DESCRIPTION
C901	168-1042-78	16V 0.1uF
C902	168-1042-78	16V 0.1uF
C903	165-2263-35	16V 22uF
C904	168-1042-78	16V 0.1uF
C905	168-1042-78	16V 0.1uF
C906	168-1042-78	16V 0.1uF
C907	165-2263-35	16V 22uF
C911	042-1768-90	16V 10uF
C912	042-1768-90	16V 10uF
C913	042-1768-90	16V 10uF
C914	042-1768-90	16V 10uF
C915	042-1768-90	16V 10uF

REF No.	PART No.	DESCRIPTION
C916	042-1768-90	16V 10uF
C917	042-1768-90	16V 10uF
C918	042-1768-90	16V 10uF
C919	042-1768-90	16V 10uF
C920	042-1768-90	16V 10uF
C921	042-1768-90	16V 10uF
C922	042-1768-90	16V 10uF
C923	168-1022-55	1000pF K
C924	166-1007-50	10pF CH
IC901	051-6707-90	AK4355VF
J901	074-1059-80	30P
J902	074-1059-80	30P

REF No.	PART No.	DESCRIPTION
L901	010-3052-66	22uH
L902	010-3052-66	22uH
L951	010-3108-53	330 ohm/100MHz
P901	074-1138-56	6P
P902	076-6016-56	PLUG(6P)
R901	119-0000-05	1/10W 0 ohm JW
R902	119-0000-05	1/10W 0 ohm JW
R903	119-0000-05	1/10W 0 ohm JW
TM902	073-0768-90	TERMINAL
PWB	039-3190-00	PWB(WITHOUT COMPONENT)

WIRING CONNECTION

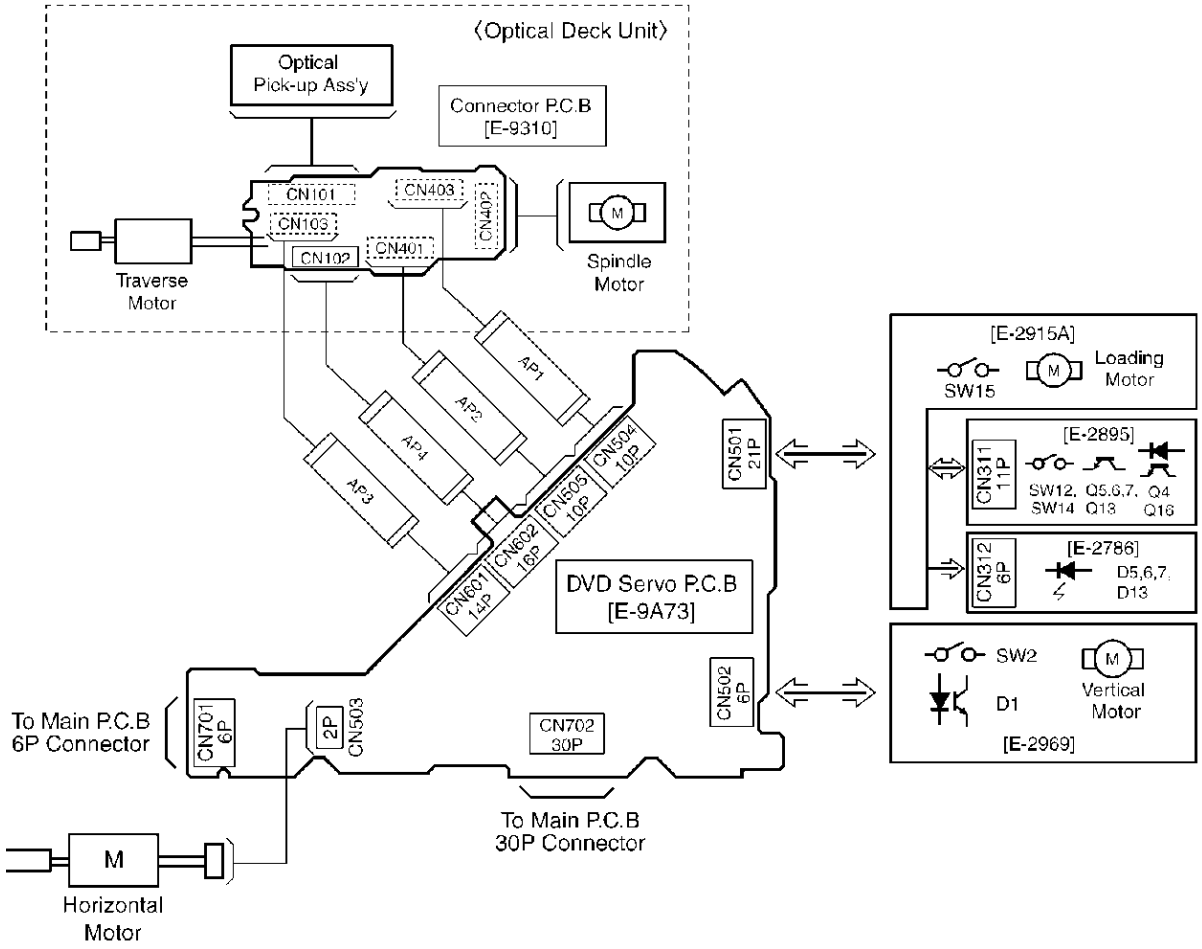

EXPLODED VIEW/PARTS LIST

NO.	PART NO.	DESCRIPTION	Q'TY
AJ1	658-0240-62	Power Cord With Plug 12v	1
AT1	658-0248-09	Terminal,Servo PCB	1
AP1	658-0253-26	Suspension FPC 1	1
AP2	658-0253-27	Suspension FPC 2	1
AP3	658-0253-28	Pick-up FPC 1	1
AP4	658-0253-29	Pick-up FPC 2	1
1	658-0240-65	Side Bracket L	1
2	658-0240-72	Outline Detection Spring	2
3	658-0253-30	Upper Chassis Ass'y	1
4	658-0240-84	Roller	1
5	658-0240-73	Feeder lock Lever Spring	1

NO.	PART NO.	DESCRIPTION	Q'TY
6	658-0253-31	Upper Chassis Unit	1
7	658-0240-67	Side chassis DR	1
8	658-0253-32	Disc Guide, U	1
9	658-0240-76	Feeder Piece	1
10	658-0240-74	Off Backlash Spring	1
11	658-0253-33	Feeder Arm Ass'y	1
12	658-0249-08	Roller Shaft Collar	1
14	658-0253-34	Rubber Roller	2
15	658-0253-35	Roller Shaft Ass'y	1
16	658-0253-36	Loading FPC Ass'y	1
17	658-0240-81	Loading Motor Bracket Ass'y	1

NO.	PART NO.	DESCRIPTION	Q'TY
18	658-0240-82	Loading Gear	1
19	658-0253-37	Loading Motor Ass'y	1
20	658-0253-38	Crescent Ring	2
21	658-0253-39	Push Lever Spring	1
22	658-0253-40	Push Lever Stopper Piece	1
24	658-0253-41	Push Lever Ass'y	1
25	658-0240-87	Spring	1
26	658-0249-10	Feeder Rabel Cover	1
27	658-0240-88	Guide Spring F	1
28	658-0253-42	Guide F, U	1
29	658-0249-16	Guide (FL)	1
31	658-0249-14	Slide Plate	1
32	658-0240-91	Shaft	3
33	658-0253-43	Disc Roller	3
34	658-0253-44	Feeder Plate Ass'y	1
35	658-0253-45	Feeder Roller	1
36	658-0240-89	Feeder Spring	2
37	658-0240-98	Guide F Base	1
38	658-0240-99	Guide Plate Collar	4
39	658-0253-46	Guide F Cam Plate Ass'y	1
40	658-0241-02	Roller Plate Spring	1
50	658-0253-47	Optical Deck Unit	1
71	658-0249-17	Lever	1
72	658-0241-04	Guide Lever Ass'y B	1
73	658-0241-06	Clamping Drive Spring	1
74	658-0241-07	Horizontal Rack	1
75	658-0253-48	Swing Base Ass'y	1
76	658-0241-25	Stocker Rack	1
78	658-0241-21	Suspension Lock Plate	1
79	658-0248-22	Lever	1
81	658-0253-49	O-Ring	1
82	658-0241-24	Damper Spring R	1
83	658-0241-22	Damper Spring	2
86	658-0241-29	Horizontal Cam Gear	1
87	658-0241-34	Horizontal Cam Gear 5	1
88	658-0253-50	Horizontal Gear 4	1
89	658-0241-10	Snap Ring	1
90	658-0241-18	Horizontal Gear -3	1
91	658-0248-20	Gear	1
92	658-0253-51	Horizontal Gear 1	1
93	658-0241-12	Stocker Cam -3	2
94	658-0241-15	ELV Gear -4	2
95	658-0248-21	Stocker Thrust Spring	3
96	658-0241-17	Stocker Cam -2	2
97	658-0241-26	Elevator Gear 2	3
98	658-0241-27	Elevator Gear 3	3
99	658-0241-39	Elevator Gear 1	2
100	658-0253-52	Stocker Cam 1	1
101	658-0248-25	Stocker Roller	1
102	658-0241-37	Elevator Motor Bracket	1

NO.	PART NO.	DESCRIPTION	Q'TY
103	658-0241-36	Elevator Motor Ass'y	1
104	658-0253-53	Elevator FPC Ass'y	1
106	658-0248-23	Disc Holder L	1
107	658-0241-31	Disc Hold Gear	1
108	658-0253-54	Horizontal Cam Gear 2	1
109	658-0248-18	Horizontal Cam	1
110	658-0241-32	Clamp Cam Gear	1
111	658-0248-24	Main Chassis Ass'y	1
113	658-0253-55	Insulator Sheet	1
114	658-0241-38	SW Cover	1
116	658-0253-56	Guide B Cam Plate Ass'y	1
117	658-0253-57	Guide B Base Ass'y	1
118	658-0249-19	Guide BU	1
119	658-0241-42	Guide BL	1
120	658-0249-20	Guide Spring B	1
121	658-0241-45	Avoidance Lever Spring	1
122	658-0241-46	Pushout Cam Gear	1
123	658-0249-21	Avoidance Lever 1 Ass'y	1
125	658-0243-01	Disc Holder L	1
126	658-0241-50	Pushout Plate Spring	1
127	658-0241-51	Push Lever Spring	1
128	658-0253-58	Pushout Lever	1
129	658-0248-31	Stocker Top Coner Ass'y	1
130	658-0248-28	Stocker Spring	6
131	658-0248-29	Stocker Spring	2
132	658-0253-59	Stocker Tray Supporting P	1
133	658-0248-33	Pushout Gear 1	1
134	658-0248-32	Pushout Gear 2	1
135	658-0241-57	Horizontal Motor Bracket	1
136	658-0253-60	Horizontal Motor Ass'y	1
138	658-0248-35	Stocker Tray	6
139	658-0248-36	Stocker Tray Housing L	1
150	658-0241-62	Retanning Ring	5
151	658-0241-63	E-Ring	9
152	658-0241-64	Retanning Ring	4
153	658-0241-65	Stocker Cam Ring	3
154	658-0241-66	Screw, M2x2mm	2
155	658-0241-67	Screw, M2x2mm	4
156	658-0248-37	Bind Screw, M2x3mm	3
157	658-0241-69	Bind Screw, M2x4mm	16
158	658-0241-70	Screw w/Washer, M2x4mm	10
159	658-0253-61	Screw with Washer, M2x5mm	1
160	658-0241-71	Screw w/Washer, M2x6mm	2
162	658-0249-23	Spring	2
163	658-0241-73	Thin Head Screw w/Washer	2
165	658-0253-62	Bind Screw, M2x2.5mm	3
166	658-0241-72	Spring	3
167	658-0241-76	Screw, M1.7x3mm	1
168	658-0249-24	Screw, M2x16mm	2

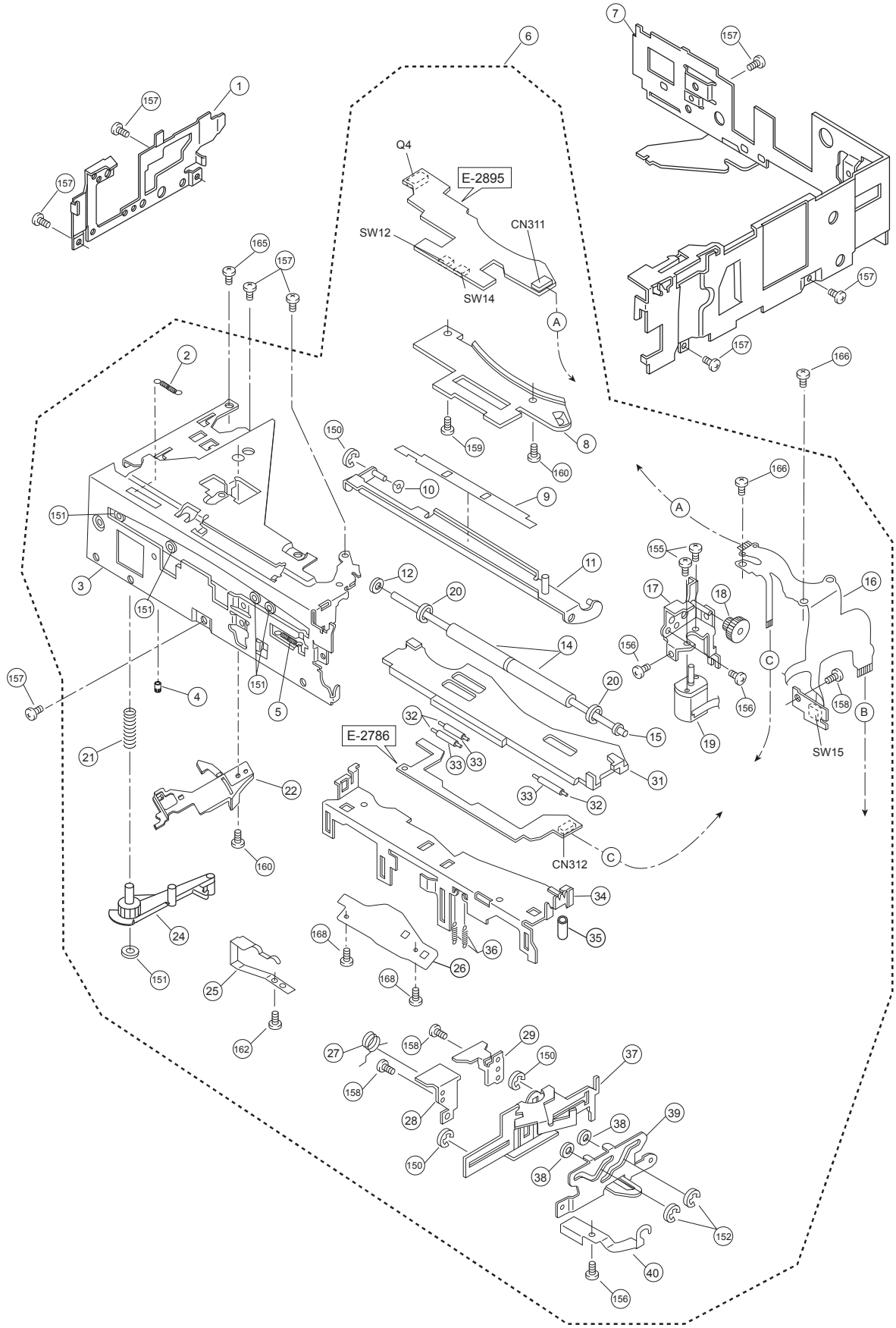
E-2895
Q4
SW12
CN311
SW14
E-2786
CN312
SW15

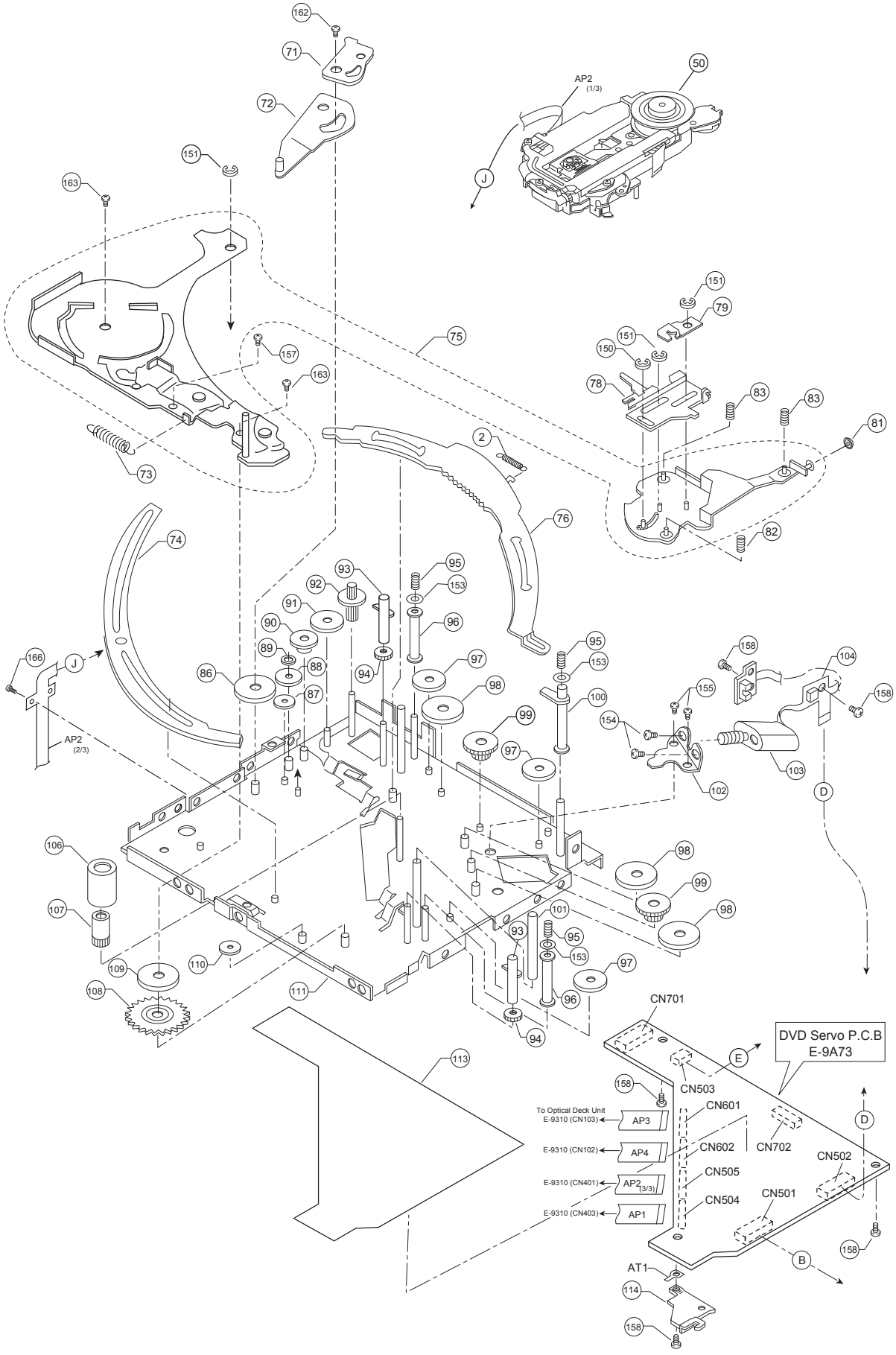
AP2 (1/3)
AP2 (2/3)
AP2 (3/3)
DVD Servo P.C.B
E-9A73
CN701
CN503
CN601
CN602
CN702
CN502
CN505
CN504
CN501
To Optical Deck Unit
E-9310 (CN103)
E-9310 (CN102)
E-9310 (CN401)
E-9310 (CN403)
AP3
AP4
AP1
AT1

929-2509-00

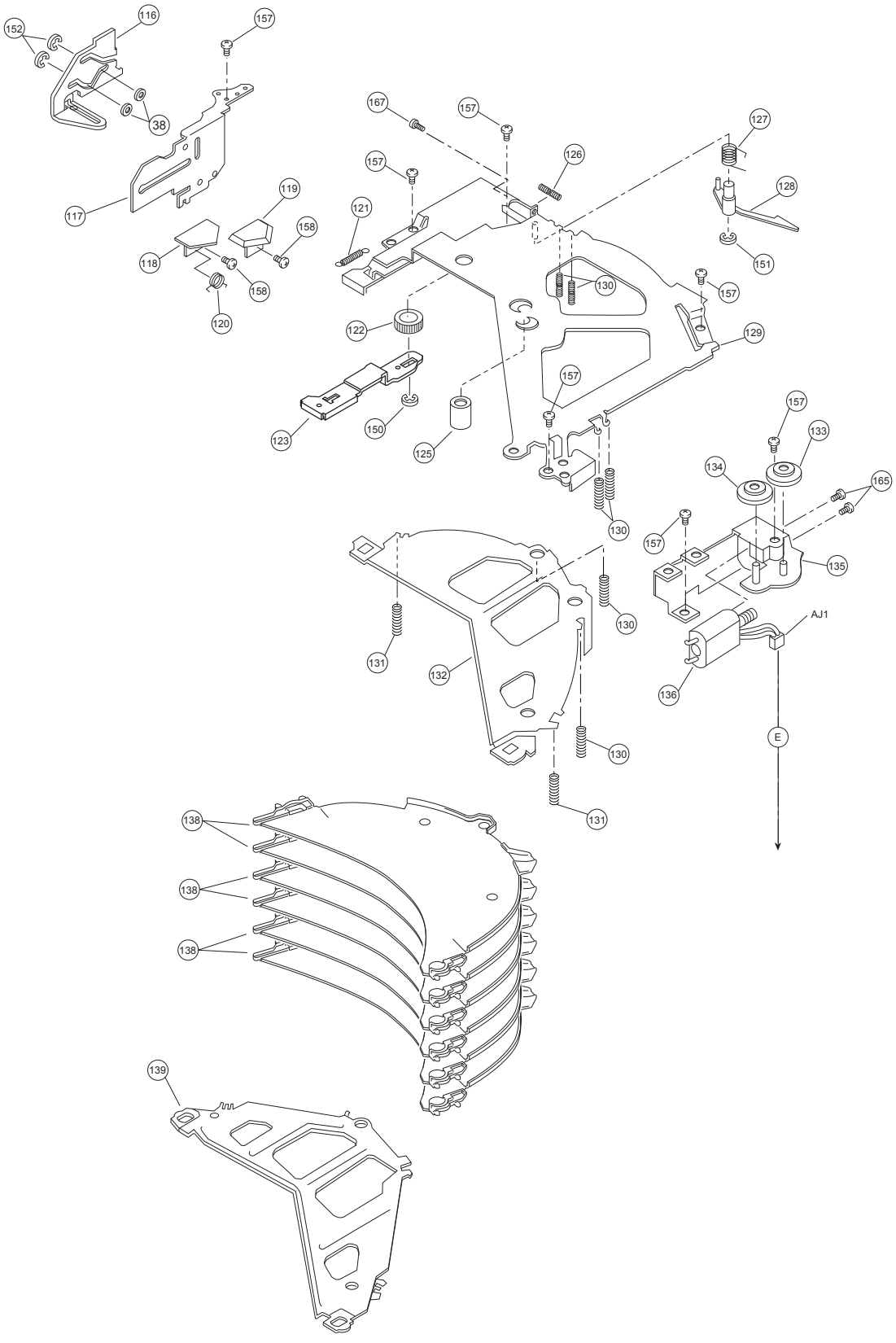
152
116
157
38
117
119
158
118
158
120
167
157
157
126
127
128
121
151
130
157
122
129
157
123
150
125
157
133
134
165
130
157
135
130
AJ1
131
132
136
E
130
131
138
138
138
139

ELECTRICAL PARTS LIST

DVD Servo P.C.B(BM1) section [E-9A73]

* Spare parts of IC301 and IC311 are not supplied. Please use the spare parts of DVD servo PCB assembly.

REF No.	PART No.	DESCRIPTION
C101	658-0249-03	0.1uF 10WV
C102	658-0249-03	0.1uF 10WV
C103	658-0249-03	0.1uF 10WV
C104	658-0249-03	0.1uF 10WV
C105	658-0249-03	0.1uF 10WV
C106	658-0249-03	0.1uF 10WV
C107	658-0249-03	0.1uF 10WV
C108	658-0249-03	0.1uF 10WV
C109	658-0249-03	0.1uF 10WV
C111	658-0253-09	0.01uF 25WV
C112	658-0249-03	0.1uF 10WV
C113	658-0249-03	0.1uF 10WV
C114	658-0240-13	10uF 6.3WV
C116	658-0249-03	0.1uF 10WV
C117	658-0251-14	0.033uF 10WV
C118	658-0244-07	50WV0.1uF
C119	658-0244-07	50WV0.1uF
C120	658-0244-07	50WV0.1uF
C121	658-0251-15	5600PF 25WV
C122	658-0251-16	0.018uF 16WV
C123	658-0249-03	0.1uF 10WV
C124	658-0249-03	0.1uF 10WV
C125	658-0249-03	0.1uF 10WV
C126	658-0249-03	0.1uF 10WV
C127	658-0249-03	0.1uF 10WV
C128	658-0249-03	0.1uF 10WV
C129	658-0249-03	0.1uF 10WV
C130	658-0249-03	0.1uF 10WV
C131	658-0249-03	0.1uF 10WV
C132	658-0249-03	0.1uF 10WV
C133	658-0244-07	50WV0.1uF
C134	658-0244-07	50WV0.1uF
C135	658-0244-07	50WV0.1uF
C136	658-0240-13	10uF 6.3WV
C137	658-0240-13	10uF 6.3WV
C141	658-0249-03	0.1uF 10WV
C142	658-0244-07	50WV0.1uF
C143	658-0240-13	10uF 6.3WV
C144	658-0244-07	50WV0.1uF
C147	658-0253-10	390PF 50WV
C148	658-0253-10	390PF 50WV
C149	658-0240-13	10uF 6.3WV
C150	658-0249-03	0.1uF 10WV
C151	658-0240-42	1uF 6.3WV
C152	658-0240-42	1uF 6.3WV
C153	658-0249-03	0.1uF 10WV
C154	658-0249-03	0.1uF 10WV
C155	658-0249-03	0.1uF 10WV
C156	658-0249-03	0.1uF 10WV
C157	658-0249-03	0.1uF 10WV
C158	658-0249-03	0.1uF 10WV
C161	658-0240-13	10uF 6.3WV
C162	658-0249-03	0.1uF 10WV
C171	658-0249-03	0.1uF 10WV
C172	658-0249-03	0.1uF 10WV
C173	658-0249-03	0.1uF 10WV
C174	658-0249-03	0.1uF 10WV
C175	658-0249-03	0.1uF 10WV
C176	658-0249-03	0.1uF 10WV
C177	658-0249-03	0.1uF 10WV
C178	658-0249-03	0.1uF 10WV
C179	658-0249-03	0.1uF 10WV
C180	658-0249-03	0.1uF 10WV
C181	658-0249-03	0.1uF 10WV
C201	658-0240-13	10uF 6.3WV
C202	658-0249-03	0.1uF 10WV
C203	658-0249-03	0.1uF 10WV
C204	658-0249-03	0.1uF 10WV
C205	658-0249-03	0.1uF 10WV
C206	658-0249-03	0.1uF 10WV
C211	658-0240-42	1uF 6.3WV

REF No.	PART No.	DESCRIPTION
C212	658-0249-03	0.1uF 10WV
C213	658-0249-03	0.1uF 10WV
C301	658-0253-09	0.01uF 25WV
C303	658-0249-03	0.1uF 10WV
C304	658-0240-13	10uF 6.3WV
C311	658-0249-03	0.1uF 10WV
C401	658-0249-03	0.1uF 10WV
C402	658-0240-13	10uF 6.3WV
C406	658-0249-03	0.1uF 10WV
C407	658-0249-03	0.1uF 10WV
C408	658-0249-03	0.1uF 10WV
C409	658-0253-09	0.01uF 25WV
C501	658-0246-22	50WV100PF
C502	658-0246-22	50WV100PF
C503	658-0249-03	0.1uF 10WV
C511	658-0249-03	0.1uF 10WV
C513	658-0249-03	0.1uF 10WV
C514	658-0249-03	0.1uF 10WV
C515	658-0249-03	0.1uF 10WV
C521	658-0249-03	0.1uF 10WV
C522	658-0249-03	0.1uF 10WV
C523	658-0249-03	0.1uF 10WV
C524	658-0249-03	0.1uF 10WV
C525	658-0249-03	0.1uF 10WV
C531	658-0253-09	0.01uF 25WV
C532	658-0253-09	0.01uF 25WV
C533	658-0249-03	0.1uF 10WV
C534	658-0249-03	0.1uF 10WV
C535	658-0249-03	0.1uF 10WV
C536	658-0249-03	0.1uF 10WV
C537	658-0249-03	0.1uF 10WV
C538	658-0249-03	0.1uF 10WV
C539	658-0249-03	0.1uF 10WV
C601	658-0240-13	10uF 6.3WV
C602	658-0253-09	0.01uF 25WV
C603	658-0249-03	0.1uF 10WV
C604	658-0249-03	0.1uF 10WV
C605	658-0249-03	0.1uF 10WV
C606	658-0249-03	0.1uF 10WV
C611	658-0249-04	47uF 6.3WV
C612	658-0249-03	0.1uF 10WV
C613	658-0249-04	47uF 6.3WV
C621	658-0249-04	47uF 6.3WV
C622	658-0249-03	0.1uF 10WV
C623	658-0249-04	47uF 6.3WV
C631	658-0240-14	47uF 6.3WV
C632	658-0240-13	10uF 6.3WV
C701	658-0246-13	50WV1000PF
C702	658-0246-13	50WV1000PF
C703	658-0246-13	50WV1000PF
C704	658-0246-13	50WV1000PF
C705	658-0253-11	10uF 10WV
C706	658-0240-13	10uF 6.3WV
C707	658-0249-03	0.1uF 10WV
C708	658-0240-14	47uF 6.3WV
C741	658-0249-03	0.1uF 10WV
C751	658-0253-11	10uF 10WV
C752	658-0249-03	0.1uF 10WV
C753	658-0240-14	47uF 6.3WV
C761	658-0240-13	10uF 6.3WV
C762	658-0240-42	1uF 6.3WV
C763	658-0249-03	0.1uF 10WV
C764	658-0240-14	47uF 6.3WV
C771	658-0249-03	0.1uF 10WV
C781	658-0240-13	10uF 6.3WV
C782	658-0249-03	0.1uF 10WV
C783	658-0240-42	1uF 6.3WV
C784	658-0240-42	1uF 6.3WV
C785	658-0240-42	1uF 6.3WV
C786	658-0249-03	0.1uF 10WV
C801	658-0249-03	0.1uF 10WV

REF No.	PART No.	DESCRIPTION
C802	658-0249-03	0.1uF 10WV
C803	658-0253-12	0.1uF 50WV
C804	658-0240-13	10uF 6.3WV
C805	658-0246-22	50WV100PF
C806	658-0248-07	10PF 50WV
C807	658-0248-07	10PF 50WV
C808	658-0248-07	10PF 50WV
C811	658-0240-14	47uF 6.3WV
CN501	658-0253-18	Connector, 21P
CN502	658-0240-28	Connector, 6P
CN503	658-0246-27	Connector,2P
CN504	658-0240-29	Connector, 10P
CN505	658-0240-29	Connector, 10P
CN601	658-0240-24	Connector, 14P
CN602	658-0240-25	Connector, 16P
CN701	658-0240-28	Connector, 6P
CN702	658-0246-24	Connector,30P
D401	658-0253-08	Diode
IC101	658-0253-02	MN2DS05AA2UB
IC201	658-0251-02	C3ABPY000012
IC301	----------	C3FBMD000282
IC311	----------	C3GBDC000005
IC401	658-0253-03	MNBC457DHUC
IC501	658-0253-04	C0GBY0000025
IC521	658-0237-09	C0GBH0000006
IC741	658-0246-07	MN13821SJP
IC751	658-0253-05	C0CBCDG00001
IC761	658-0251-05	C0CBAAF00035
IC771	658-0251-03	C0JBAA000261
IC781	658-0251-08	C1AB00002404
IC782	658-0251-09	C0CBCAB00010
IC801	658-0253-06	C0FBBK000064
L111	658-0240-30	Coil
L141	658-0240-30	Coil
L142	658-0240-30	Coil
L151	658-0240-52	Coil
L152	658-0240-56	Filter
L161	658-0240-30	Coil
L201	658-0253-19	Coil
L301	658-0253-19	Coil
L311	658-0240-30	Coil
L401	658-0253-19	Coil
L601	658-0240-30	Coil
L631	658-0253-19	Coil
L701	658-0240-32	Coil
L703	658-0240-32	Coil
L704	658-0240-32	Coil
L721	658-0240-57	Filter
L722	658-0240-57	Filter
L723	658-0240-46	470PF 50WV
L724	658-0240-46	470PF 50WV
L801	658-0246-32	Coil
L802	658-0246-32	Coil
L803	658-0246-32	Coil
L804	658-0246-32	Coil
L811	117-0000-10	CHIP-R
L812	117-0000-10	CHIP-R
Q521	658-0237-15	Transistor
Q601	658-0237-16	Transistor
Q602	658-0251-10	Transistor
Q603	658-0253-07	Transistor
Q611	658-0251-11	Transistor
Q612	658-0237-14	Transistor
Q621	658-0251-11	Transistor
Q622	658-0237-14	Transistor
R101	033-0000-05	0 ohm 1/16W
R102	033-4731-15	47k ohm 1/16W
R103	033-0000-05	0 ohm 1/16W
R111	033-4731-15	47k ohm 1/16W
R112	033-4731-15	47k ohm 1/16W
R113	033-2201-15	22 ohm 1/16W

REF No.	PART No.	DESCRIPTION
R114	033-2201-15	22 ohm 1/16W
R115	033-1031-15	10k ohm 1/16W
R116	033-1011-15	100 ohm 1/16W
R117	033-1031-15	10k ohm 1/16W
R119	033-1031-15	10k ohm 1/16W
R120	033-1031-15	10k ohm 1/16W
R121	033-1031-15	10k ohm 1/16W
R122	033-1031-15	10k ohm 1/16W
R141	033-0000-05	0 ohm 1/16W
R142	658-0251-23	9.1k ohm 1/16W
R143	658-0251-23	9.1k ohm 1/16W
R144	658-0253-13	24k ohm 1/16W
R145	658-0253-14	6.8W 1/16W
R146	658-0251-25	12k ohm 1/16W
R147	658-0251-24	5.1k ohm 1/16W
R148	658-0253-15	160 ohm 1/10W
R151	658-0253-20	Coil
R152	033-4701-15	47 ohm 1/16W
R153	033-1011-15	100 ohm 1/16W
R154	033-1011-15	100 ohm 1/16W
R155	033-1011-15	100 ohm 1/16W
R156	033-1011-15	100 ohm 1/16W
R157	033-1011-15	100 ohm 1/16W
R158	033-1011-15	100 ohm 1/16W
R159	658-0251-29	330 ohm 1/16W
R171	658-0240-47	33 ohm 1/16W
R172	658-0251-37	Network Resistor
R173	658-0251-37	Network Resistor
R174	033-0000-05	0 ohm 1/16W
R175	033-0000-05	0 ohm 1/16W
R176	033-0000-05	0 ohm 1/16W
R177	658-0251-37	Network Resistor
R178	658-0251-37	Network Resistor
R179	033-0000-05	0 ohm 1/16W
R180	033-0000-05	0 ohm 1/16W
R201	033-8201-15	82 ohm 1/16W
R202	658-0237-58	Resistor Network
R203	658-0237-58	Resistor Network
R204	658-0251-37	Network Resistor
R205	033-0000-05	0 ohm 1/16W
R211	033-0000-05	0 ohm 1/16W
R212	033-0000-05	0 ohm 1/16W
R213	658-0251-37	Network Resistor
R214	033-0000-05	0 ohm 1/16W
R215	033-3331-15	33k ohm 1/16W
R216	033-8201-15	82 ohm 1/16W
R217	658-0237-58	Resistor Network
R218	658-0237-58	Resistor Network
R301	033-1011-15	100 ohm 1/16W
R302	033-1031-15	10k ohm 1/16W
R303	033-1031-15	10k ohm 1/16W
R304	658-0253-23	Network Resistor
R305	658-0253-23	Network Resistor
R306	658-0253-23	Network Resistor
R307	658-0253-23	Network Resistor

REF No.	PART No.	DESCRIPTION
R311	033-4731-15	47k ohm 1/16W
R312	033-1011-15	100 ohm 1/16W
R313	033-1011-15	100 ohm 1/16W
R314	033-1011-15	100 ohm 1/16W
R401	033-3321-15	3.3k ohm 1/16W
R402	033-3321-15	3.3k ohm 1/16W
R403	033-3321-15	3.3k ohm 1/16W
R404	033-3321-15	3.3k ohm 1/16W
R405	033-3321-15	3.3k ohm 1/16W
R406	033-3321-15	3.3k ohm 1/16W
R407	033-3321-15	3.3k ohm 1/16W
R408	033-3321-15	3.3k ohm 1/16W
R409	033-3321-15	3.3k ohm 1/16W
R410	033-1011-15	100 ohm 1/16W
R411	033-1011-15	100 ohm 1/16W
R412	033-1011-15	100 ohm 1/16W
R413	033-1011-15	100 ohm 1/16W
R501	033-1531-15	15k ohm 1/16W
R502	033-1531-15	15k ohm 1/16W
R503	033-1531-15	15k ohm 1/16W
R504	033-1031-15	10k ohm 1/16W
R505	033-1031-15	10k ohm 1/16W
R506	033-3331-15	33k ohm 1/16W
R507	658-0237-45	7.5k ohm 1/16W
R508	033-1531-15	15k ohm 1/16W
R511	033-1531-15	15k ohm 1/16W
R512	658-0240-20	56k ohm 1/16W
R514	033-1031-15	10k ohm 1/16W
R515	033-1031-15	10k ohm 1/16W
R516	033-1031-15	10k ohm 1/16W
R517	033-1231-15	12k ohm 1/16W
R518	033-1031-15	10k ohm 1/16W
R519	033-1531-15	15k ohm 1/16W
R520	033-4731-15	47k ohm 1/16W
R521	658-0240-20	56k ohm 1/16W
R522	658-0240-23	100k ohm 1/16W
R523	658-0240-21	1 ohm 1/10W
R524	658-0240-21	1 ohm 1/10W
R531	033-2211-15	220 ohm 1/16W
R532	033-2211-15	220 ohm 1/16W
R533	033-2211-15	220 ohm 1/16W
R534	033-2211-15	220 ohm 1/16W
R535	658-0237-45	7.5k ohm 1/16W
R536	658-0237-45	7.5k ohm 1/16W
R537	658-0237-45	7.5k ohm 1/16W
R538	658-0237-45	7.5k ohm 1/16W
R539	658-0240-20	56k ohm 1/16W
R540	033-2211-15	220 ohm 1/16W
R541	658-0240-20	56k ohm 1/16W
R542	033-2211-15	220 ohm 1/16W
R543	658-0240-20	56k ohm 1/16W
R544	033-2211-15	220 ohm 1/16W
R545	033-1011-15	100 ohm 1/16W
R546	033-1011-15	100 ohm 1/16W
R601	033-1021-15	1k ohm 1/16W

REF No.	PART No.	DESCRIPTION
R611	658-0251-33	680 ohm 1/16W
R612	658-0240-47	33 ohm 1/16W
R613	033-2291-15	2.2 ohm 1/16W
R614	033-1021-15	1k ohm 1/16W
R615	658-0237-40	20 ohm 1/8W
R616	033-3321-15	3.3k ohm 1/16W
R621	658-0251-33	680 ohm 1/16W
R622	658-0240-47	33 ohm 1/16W
R623	033-2291-15	2.2 ohm 1/16W
R624	033-1021-15	1k ohm 1/16W
R625	658-0237-40	20 ohm 1/8W
R626	033-3321-15	3.3k ohm 1/16W
R709	117-0000-10	CHIP-R
R711	033-0000-05	0 ohm 1/16W
R712	033-0000-05	0 ohm 1/16W
R713	033-0000-05	0 ohm 1/16W
R714	033-0000-05	0 ohm 1/16W
R715	033-0000-05	0 ohm 1/16W
R716	033-1011-15	100 ohm 1/16W
R717	033-1011-15	100 ohm 1/16W
R718	033-1011-15	100 ohm 1/16W
R719	033-1011-15	100 ohm 1/16W
R721	033-2211-15	220 ohm 1/16W
R722	033-2211-15	220 ohm 1/16W
R723	033-2211-15	220 ohm 1/16W
R724	033-2211-15	220 ohm 1/16W
R725	033-1011-15	100 ohm 1/16W
R726	117-0000-10	CHIP-R
R727	033-1011-15	100 ohm 1/16W
R736	117-0000-10	CHIP-R
R741	658-0251-30	330k ohm 1/16W
R762	117-0000-10	CHIP-R
R763	658-0253-16	200 ohm 1/16W
R764	658-0244-11	Chip,1/16W1k ohm
R771	658-0240-23	100k ohm 1/16W
R783	658-0240-48	75 ohm 1/10W
R801	033-0000-05	0 ohm 1/16W
R802	033-0000-05	0 ohm 1/16W
R803	033-0000-05	0 ohm 1/16W
R804	033-0000-05	0 ohm 1/16W
R805	658-0253-17	120 ohm 1/16W
R806	033-1011-15	100 ohm 1/16W
R807	033-1011-15	100 ohm 1/16W
R808	033-1011-15	100 ohm 1/16W
SW8	658-0244-13	K0L1BA000104
SW9	658-0253-21	Switch
SW10	658-0253-21	Switch
SW11	658-0253-21	Switch
XL101	658-0239-02	Crystal Oscillator
XL401	658-0253-22	Ceramic Oscillator
PWB	658-0253-01	DVD Servo P.C.B Ass'y(WITH COMPONENTS)

Load P.C.B 2(BM2) section [E-2786]

REF No.	PART No.	DESCRIPTION
CN312	658-0240-61	Connector, 6P
D5	658-0253-24	Diode

REF No.	PART No.	DESCRIPTION
D6	658-0253-24	Diode
D7	658-0253-24	Diode

REF No.	PART No.	DESCRIPTION
D13	658-0253-24	Diode

Load P.C.B 1(BM3) section [E-2895]

REF No.	PART No.	DESCRIPTION
CN311	658-0253-25	Connector, 11P
Q4	658-0240-58	LED
Q5	658-0244-04	B3HB00000023

REF No.	PART No.	DESCRIPTION
Q6	658-0244-04	B3HB00000023
Q7	658-0244-04	B3HB00000023
Q13	658-0244-04	B3HB00000023

REF No.	PART No.	DESCRIPTION
Q16	658-0240-58	LED
SW12	658-0244-13	K0L1BA000104
SW14	658-0244-13	K0L1BA000104

Loading FPC(BM4) section [E-2915A]

REF No.	PART No.	DESCRIPTION
SW15	658-0244-13	K0L1BA000104

Elevator FPC(BM5) section [E-2969]

REF No.	PART No.	DESCRIPTION
D1	658-0240-58	LED

REF No.	PART No.	DESCRIPTION
SW2	658-0244-13	K0L1BA000104