9. EXPLODED VIEWS AND PARTS LIST

NOTES : • *Parts marked by " * " are generally unavailable because they are not in our Master Spare Parts List.*
• *The ⚠ mark found on some component parts indicates the importance of the safety factor of the part. Therefore, when replacing, be sure to use parts of identical designation.*
• *Screw adjacent to ▽ mark on the product are used for disassembly.*
• *For the applying amount of lubricants or glue, follow the instructions in this manual. (In the case of no amount instructions,apply as you think it appropriate.)*

9.1 PACKING

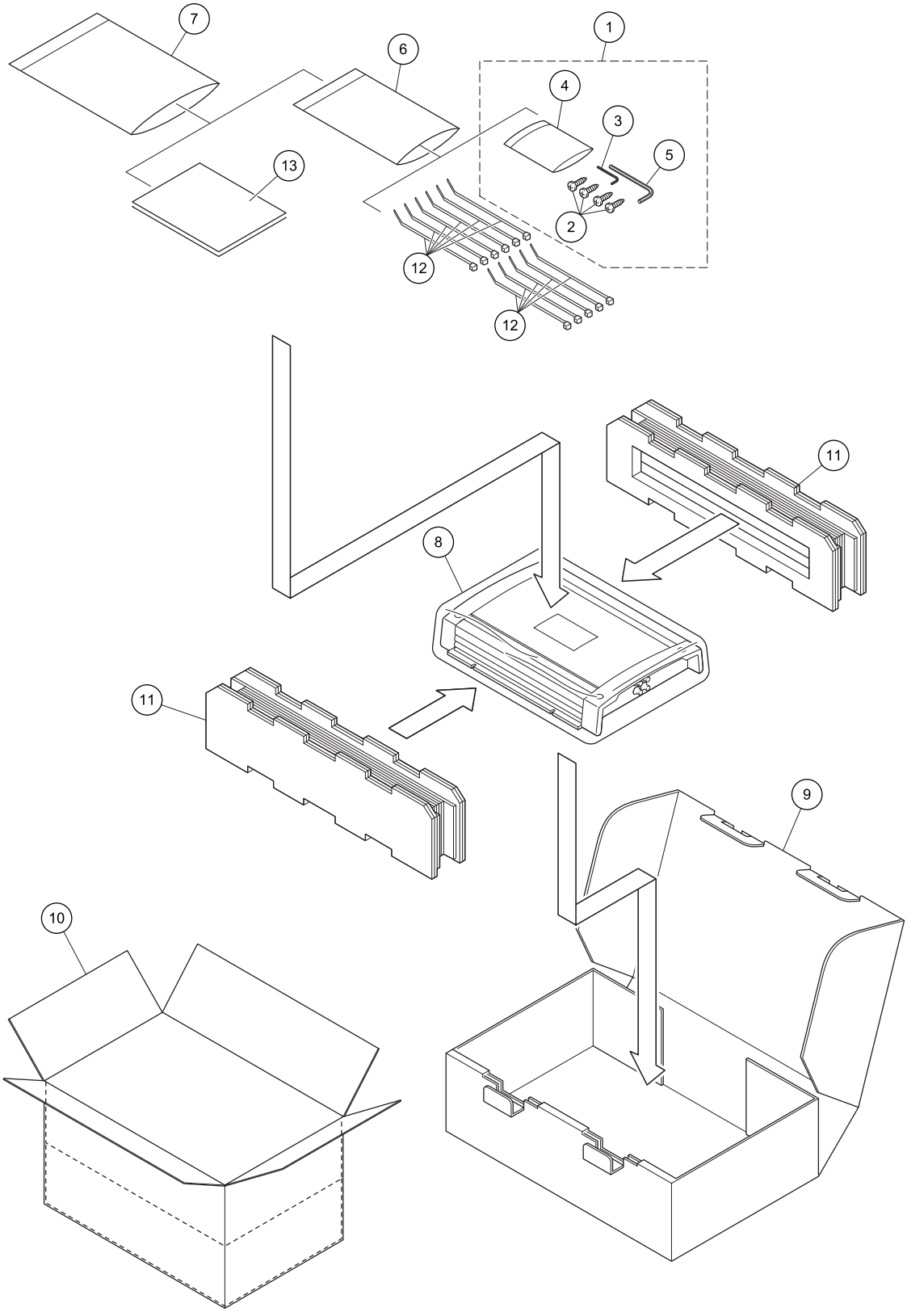

(1) PACKING SECTION PARTS LIST

Mark	No.	Description	Part No.
	1	Screw Assy	CEA8433
	2	Screw	BYC40P180FTB
	3	Shaft	CLP1246
*	4	Polyethylene Sheet	CNM4338
	5	Shaft	YLP5001
*	6	Polyethylene Bag	CEG-158
	7	Polyethylene Bag	CEG1116
	8	Polyethylene Bag	See Contrast table(2)
	9	Unit Box	See Contrast table(2)
	10	Contain Box	See Contrast table(2)
	11	Protector	CHP3369
*	12	Lock Tie	CNV-754
	13-1	Owner's Manual	See Contrast table(2)
*	13-2	Warranty Card	See Contrast table(2)

(2) CONTRAST TABLE

PRS-A900/XS/UC and PRS-A900/XS/EW5 are constructed the same except for the following:

Mark	No.	Description	PRS-A900/XS/UC	PRS-A900/XS/EW5
	8	Polyethylene Bag	CEG1351	CEG1317
	9	Unit Box	CHG6347	CHG6346
	10	Contain Box	CHL6347	CHL6346
	13-1	Owner's Manual	CRD4244	CRD4243
*	13-2	Warranty Card	CRY1070	CRY1265

Owner's Manual,Installation Manual

Part No.	Language
CRD4244	English, French, Spanish
CRD4243	English, Spanish, German, French, Italian, Dutch, Russian

9.2 EXTERIOR

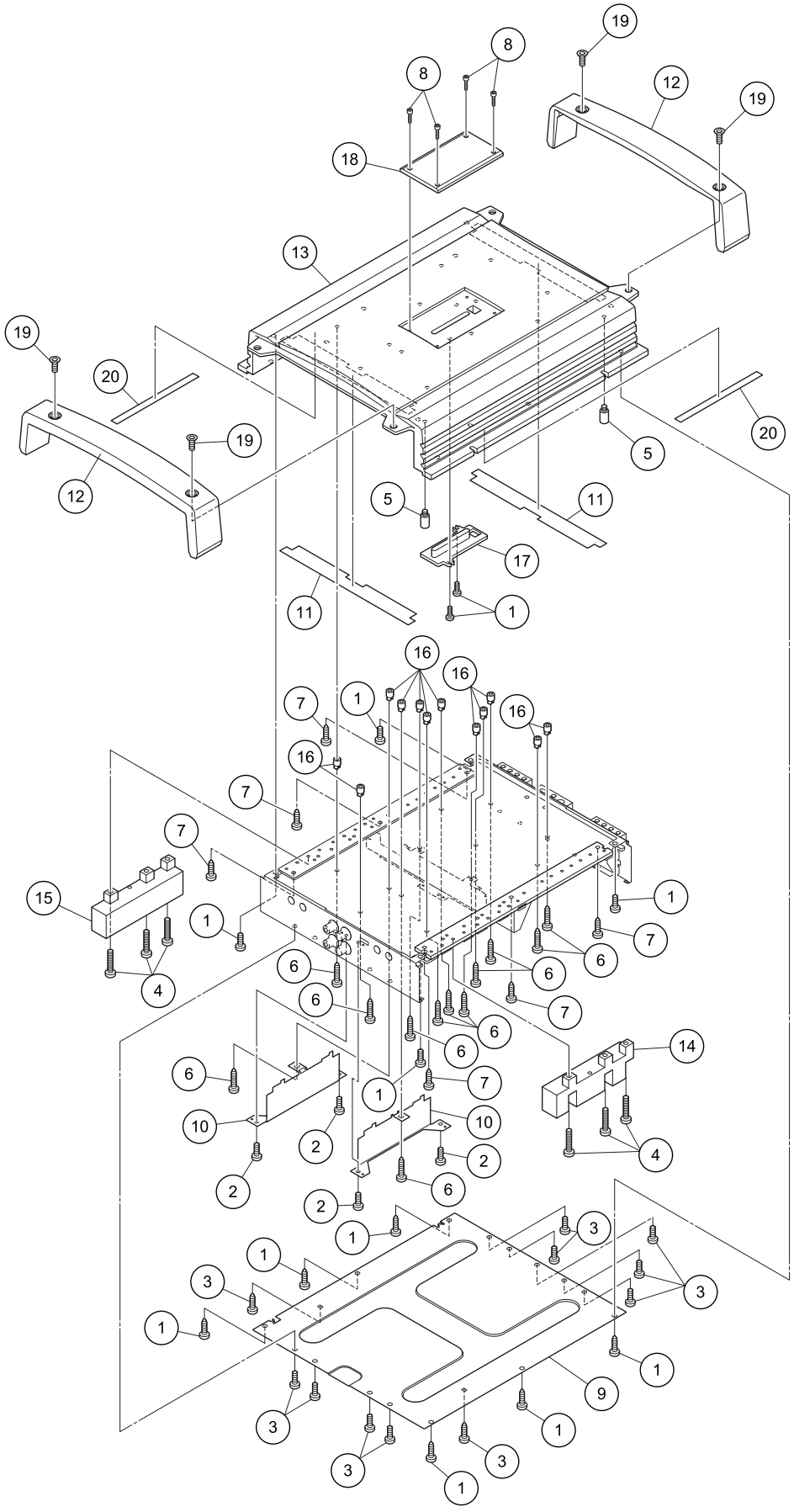

19
8
8
12
19
18
13
19
20
19
12
5
20
5
11
17
11
1
16
16
16
7
1
16
7
7
15
1
1
7
6
6
6
4
6
7
6
6
14
6
7
1
10
10
2
2
4
2
6
2
1
3
1
3
3
1
1
9
3
1
3
3
1

(1) EXTERIOR SECTION PARTS LIST

Mark	No.	Description	Part No.
	1	Screw	BBZ30P060FTB
	2	Screw	BMZ30P060FCU
	3	Screw	BMZ30P060FTB
	4	Screw	BMZ40P200FTB
	5	Screw	CBA1810
	6	Screw	CBA2012
	7	Screw	CBA2064
	8	Screw	CBA2115
	9	Case	CNB3453
	10	Holder	CND4269
	11	Sheet	CNN2247
	12	Cover	See Contrast table(2)
	13	Heat Sink	See Contrast table(2)
	14	Heat Sink	CNR1949
	15	Heat Sink	CNR1950
	16	Spacer	CNV8256
	17	Lighting Conductor	CNV9746
	18	Badge Unit	See Contrast table(2)
	19	Screw	YBA5002
	20	Spacer	CNN1954

(2) CONTRAST TABLE

PRS-A900/XS/UC and PRS-A900/XS/EW5 are constructed the same except for the following:

Mark	No.	Description	PRS-A900/XS/UC	PRS-A900/XS/EW5
	12	Cover	CNR1915	CNR1931
	13	Heat Sink	CNR1930	CNR1929
	18	Badge Unit	CXC8547	CXC8546

9.3 AMP UNIT

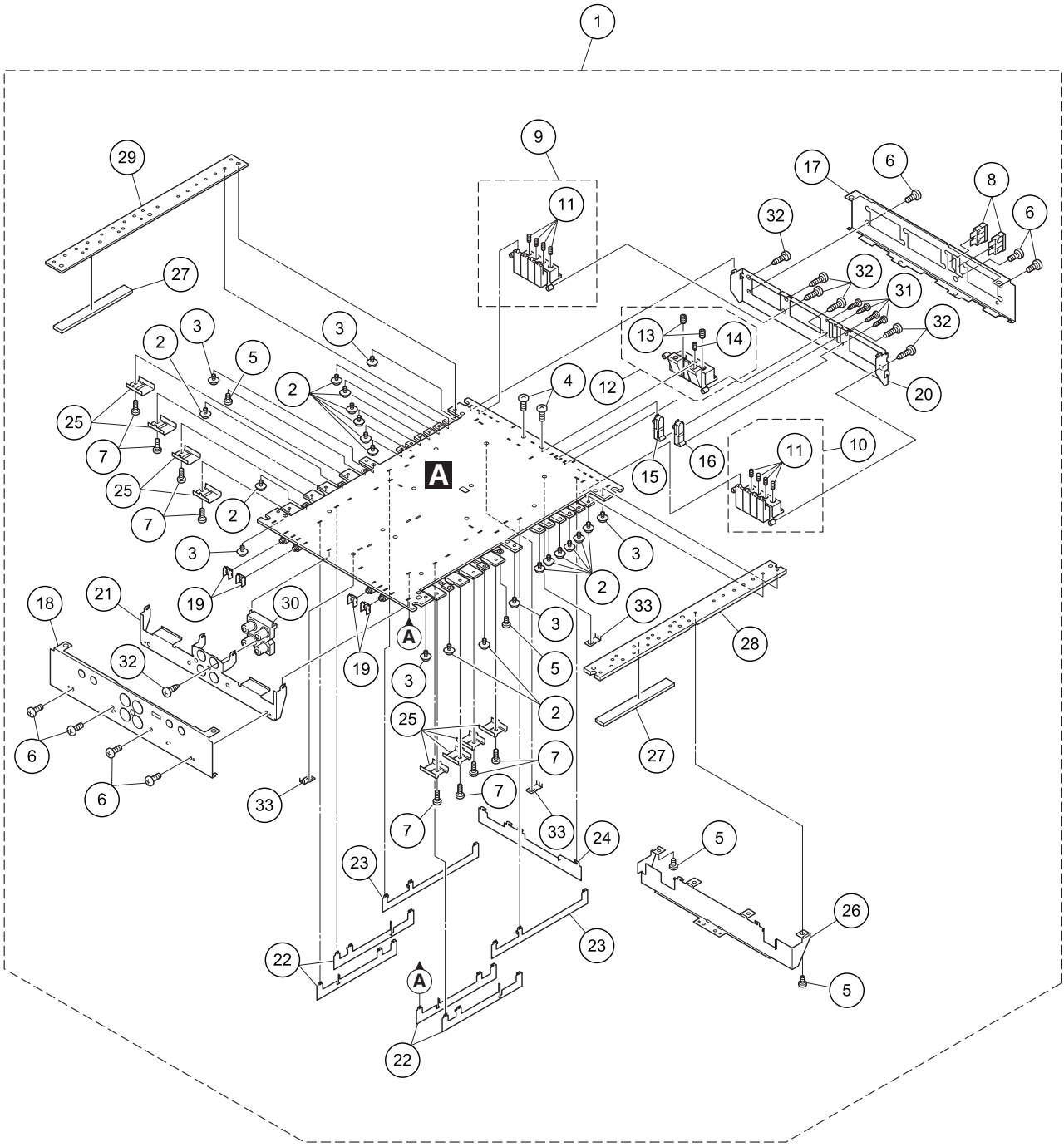

1
9
29
11
17
6
8
6
32
27
32
31
32
3
3
13
14
2
5
2
4
12
20
25
7
16
11
10
A
15
25
7
2
3
3
2
19
21
30
33
18
A
3
28
32
19
3
5
2
25
27
6
7
6
7
33
7
33
24
5
23
26
23
22
A
5
22

(1) AMP UNIT SECTION PARTS LIST

Mark	No.	Description	Part No.
	1	Amp Unit	See Contrast table(2)
	2	Screw	AMZ26P080FCC
	3	Screw	AMZ30P040FTC
	4	Screw	BBZ30P060FSN
	5	Screw	BBZ30P060FTB
	6	Screw	BMZ30P060FTB
	7	Screw(M3 x 10)	CBA2110
⚠	8	Fuse(25 A)	CEK1329
	9	Terminal(CN1101)	CKE1064
	10	Terminal(CN1201)	CKE1064
	11	Screw	CBA2060
	12	Terminal(CN601)	CKE1065
	13	Screw	CBA2059
	14	Screw	CBA2060
	15	Auto Fuse Holder(CN602)	CKR1021
	16	Auto Fuse Holder(CN603)	CKR1021
	17	Panel	CNB3454
	18	Panel	CNB3455
	19	Holder	CND2466
	20	Holder	CND4192
	21	Holder	CND4193
	22	Buss Bar	CND4194
	23	Buss Bar	CND4195
	24	Buss Bar	CND4196
	25	Holder	CND4214
	26	Holder	CND4270
	27	Sheet	CNN2049
	28	Sub Heat Sink	CNR1927
	29	Sub Heat Sink	CNR1928
	30	Pin Jack(CN101)	HKB0026
	31	Screw	PPZ20P060FTB
	32	Screw	PPZ30P100FTB
	33	Terminal(CN604, 605, 606)	VNF1084

(2) CONTRAST TABLE

PRS-A900/XS/UC and PRS-A900/XS/EW5 are constructed the same except for the following:

Mark	No.	Description	PRS-A900/XS/UC	PRS-A900/XS/EW5
	1	Amp Unit	CWH1386	CWH1384

12. ELECTRICAL PARTS LIST

NOTE:

- *Parts whose parts numbers are omitted are subject to being not supplied.*
- *The part numbers shown below indicate chip components.*

Chip Resistor

RS1/◯S◯◯◯J,RS1/◯◯S◯◯◯J

Chip Capacitor (except for CQS.....)

CKS....., CCS....., CSZS.....

- *The ⚠ mark found on some component parts indicates the importance of the safety factor of the part. Therefore, when replacing, be sure to use parts of identical designation.*
- *Meaning of the figures and others in the parentheses in the parts list.*

Example) IC 301 is on the point (face A, 91 of x-axis, and 111 of y-axis) of the corresponding PC board.

IC 301 (A, 91, 111) IC NJM2068V

Unit Number : CWH1386(UC)

Unit Number : CWH1384(EW5)

Unit Name : Amp Unit

A

Unit Number : CWH1386(UC)

Unit Number : CWH1384(EW5)

Unit Name : Amp Unit

MISCELLANEOUS

Circuit Symbol and No.		Part No.
IC 101	(B,269,138) IC	LT1358CS8
IC 201	(B,269,95) IC	LT1358CS8
IC 301	(B,269,127) IC	LT1358CS8
IC 401	(B,269,106) IC	LT1358CS8
IC 601	(A,74,116) IC	PA2027A
IC 602	(B,96,116) IC	UPC494GS
Q 601	(B,63,140) Transistor	2SC4081
Q 602	(B,68,138) Chip Transistor	2SA1576A
Q 603	(B,71,138) Transistor	DTA114TUA
Q 604	(B,74,138) Transistor	DTC114WUA
Q 605	(A,62,116) Transistor	2SB1243
Q 608	(B,80,95) Chip Transistor	2SA1576A
Q 614	(B,152,111) Chip Transistor	2SA1576A
Q 615	(B,179,126) Chip Transistor	2SA1576A
Q 616	(B,184,126) Transistor	2SC4081
Q 617	(A,144,122) Transistor	2SC2240
Q 619	(B,192,111) Transistor	2SC4081
Q 620	(B,188,107) Chip Transistor	2SA1576A
Q 641	(A,144,111) Transistor	2SC2240
Q 701	(A,108,134) Transistor	2SD1862
Q 702	(A,125,134) Transistor	2SD1862
Q 703	(A,112,134) Transistor	2SB1240
Q 704	(A,121,134) Transistor	2SB1240
Q 705	(A,58,199) Transistor	FKV550N
Q 706	(A,86,199) Transistor	FKV550N
Q 707	(A,44,199) Transistor	FKV550N
Q 708	(A,72,199) Transistor	FKV550N
Q 709	(A,246,127) Transistor	2SC4883
Q 710	(A,246,140) Transistor	2SA1859
Q 801	(A,108,99) Transistor	2SD1862
Q 802	(A,125,99) Transistor	2SD1862
Q 803	(A,112,99) Transistor	2SB1240
Q 804	(A,121,99) Transistor	2SB1240
Q 805	(A,86,34) Transistor	FKV550N
Q 806	(A,58,34) Transistor	FKV550N
Q 807	(A,72,34) Transistor	FKV550N
Q 808	(A,44,34) Transistor	FKV550N
Q 809	(A,246,105) Transistor	2SC4883
Q 810	(A,246,93) Transistor	2SA1859
Q 1101	(A,267,151) Transistor	2SA992
Q 1102	(A,240,152) Transistor	2SC1845
Q 1103	(A,267,157) Transistor	2SC1845
Q 1104	(A,240,157) Transistor	2SA992
Q 1105	(A,267,162) Transistor	2SA992
Q 1106	(A,240,163) Transistor	2SC1845
Q 1107	(A,253,199) Transistor	2SC1568
Q 1108	(A,275,172) Transistor	2SC2240
Q 1109	(A,232,174) Transistor	2SA970
Q 1110	(A,264,172) Transistor	2SC4883
Q 1111	(A,242,172) Transistor	2SA1859
Q 1112	(A,269,200) Transistor	2SC4886
Q 1113	(A,237,200) Transistor	2SA1860
Q 1114	(A,284,196) Transistor	2SD1768S
Q 1201	(A,267,81) Transistor	2SA992
Q 1202	(A,240,82) Transistor	2SC1845
Q 1203	(A,267,75) Transistor	2SC1845
Q 1204	(A,240,76) Transistor	2SA992
Q 1205	(A,267,70) Transistor	2SA992
Q 1206	(A,240,70) Transistor	2SC1845
Q 1207	(A,253,34) Transistor	2SC1568
Q 1208	(A,275,60) Transistor	2SC2240
Q 1209	(A,232,58) Transistor	2SA970
Q 1210	(A,264,60) Transistor	2SC4883
Q 1211	(A,242,60) Transistor	2SA1859
Q 1212	(A,269,33) Transistor	2SC4886
Q 1213	(A,237,33) Transistor	2SA1860
Q 1214	(A,289,39) Transistor	2SD1768S
Q 1301	(A,188,152) Transistor	2SA992

Circuit Symbol and No.		Part No.
Q 1302	(A,215,151) Transistor	2SC1845
Q 1303	(A,188,157) Transistor	2SC1845
Q 1304	(A,215,157) Transistor	2SA992
Q 1305	(A,188,163) Transistor	2SA992
Q 1306	(A,215,162) Transistor	2SC1845
Q 1307	(A,201,199) Transistor	2SC1568
Q 1308	(A,180,174) Transistor	2SC2240
Q 1309	(A,223,174) Transistor	2SA970
Q 1310	(A,190,172) Transistor	2SC4883
Q 1311	(A,212,172) Transistor	2SA1859
Q 1312	(A,185,200) Transistor	2SC4886
Q 1313	(A,217,200) Transistor	2SA1860
Q 1314	(A,173,163) Transistor	2SD1768S
Q 1401	(A,188,82) Transistor	2SA992
Q 1402	(A,215,81) Transistor	2SC1845
Q 1403	(A,188,76) Transistor	2SC1845
Q 1404	(A,215,75) Transistor	2SA992
Q 1405	(A,188,70) Transistor	2SA992
Q 1406	(A,215,70) Transistor	2SC1845
Q 1407	(A,201,34) Transistor	2SC1568
Q 1408	(A,180,58) Transistor	2SC2240
Q 1409	(A,223,58) Transistor	2SA970
Q 1410	(A,190,60) Transistor	2SC4883
Q 1411	(A,212,60) Transistor	2SA1859
Q 1412	(A,185,33) Transistor	2SC4886
Q 1413	(A,217,33) Transistor	2SA1860
Q 1414	(A,174,61) Transistor	2SD1768S
D 601	(A,23,97) Diode	RM4Z-LFJ4
D 602	(A,25,121) Diode	HZS7L(B2)
D 603	(A,69,123) Diode	1SR139-400
D 604	(B,80,137) Diode	UDZS16(B)
D 605	(A,69,126) Diode	1SR139-400
D 606	(B,68,94) Diode	MA111
D 608	(B,148,114) LED(UC)	VUB1112H-4B63B
D 609	(B,89,92) Diode	DAN202U
D 610	(B,94,95) Diode	DAN202U
D 611	(B,89,139) Diode	UDZS5R1(B)
D 613	(B,187,116) Diode	DAP202U
D 614	(B,176,125) Diode	MA111
D 615	(B,182,109) Diode	MA111
D 616	(B,148,118) LED(EW5)	UW1141C
D 640	(B,190,124) Diode	UDZS2R0(B)
D 641	(B,157,118) LED(EW5)	UW1141C
D 642	(B,157,114) LED(UC)	VUB1112H-4B63B
D 643	(B,166,118) LED(EW5)	UW1141C
D 644	(B,166,114) LED(UC)	VUB1112H-4B63B
D 701	(A,114,199) Diode	FCH10A15
D 702	(A,100,199) Diode	FRH10A15
D 703	(B,121,175) Diode	RF101L2S
D 704	(B,108,175) Diode	RF101L2S
D 705	(A,220,131) Diode	HZS16L(1)
D 706	(A,220,134) Diode	HZS16L(1)
D 801	(A,114,33) Diode	FCH10A15
D 802	(A,100,33) Diode	FRH10A15
D 803	(B,121,57) Diode	RF101L2S
D 804	(B,108,54) Diode	RF101L2S
D 805	(A,220,101) Diode	HZS16L(1)
D 806	(A,220,98) Diode	HZS16L(1)
D 1101	(A,279,188) Diode	1SS133

Circuit Symbol and No.		Part No.
D 1201	(A,284,39) Diode	1SS133
D 1202	(A,34,67) Diode	1SR139-400
D 1301	(A,195,188) Diode	1SS133
D 1302	(A,33,166) Diode	1SR139-400
D 1401	(A,174,70) Diode	1SS133
L 601	(A,45,116) Choke Coil 50 µH	CTH1341
L 701	(A,114,170) Choke Coil 320 µH	CTH1386
L 702	(A,114,149) Choke Coil 320 µH	CTH1386
L 801	(A,114,63) Choke Coil 320 µH	CTH1386
L 802	(A,114,84) Choke Coil 320 µH	CTH1386
T 701	(A,75,164) Transformer	CTT1142
T 801	(A,75,69) Transformer	CTT1142
RY1201	(A,36,53) Relay	CSR1028
RY1302	(A,36,179) Relay	CSR1028
TH601	(A,91,147) Thermistor	CCX1064
TH602	(A,91,86) Thermistor	CCX1064
TH603	(A,169,198) Thermistor	CCX1013
TH604	(A,169,34) Thermistor	CCX1013
S 601	(A,130,116) Switch(BFC)	CSH1051
S 901	(A,300,80) Switch(INPUT SELECT)	CSH1042
VR101	(A,297,188) Variable Resistor 20 kohm(A)	CCW1030
VR201	(A,297,45)Variable Resistor 20 kohm(A)	CCW1030
VR301	(A,297,171) Variable Resistor 20 kohm(A)	CCW1030
VR401	(A,297,62)Variable Resistor 20 kohm(A)	CCW1030
VR1101	(A,253,152) Semi-fixed 2.2 kohm(OB)	CCP1508
VR1102	(A,253,175) Semi-fixed 1 kohm(OB)	CCP1509
VR1201	(A,253,81) Semi-fixed 2.2 kohm(OB)	CCP1508
VR1202	(A,253,58) Semi-fixed 1 kohm(OB)	CCP1509
VR1301	(A,201,152) Semi-fixed 2.2 kohm(OB)	CCP1508
VR1302	(A,201,175) Semi-fixed 1 kohm(OB)	CCP1509
VR1401	(A,201,81) Semi-fixed 2.2 kohm(OB)	CCP1508
VR1402	(A,201,58) Semi-fixed 1 kohm(OB)	CCP1509
⚠FU602	Fuse 25 A	CEK1329
⚠FU603	Fuse 25 A	CEK1329

RESISTORS

R 101	(B,288,145)	RN1/10SE4700D
R 102	(B,274,143)	RN1/10SE2202D
R 103	(B,277,143)	RN1/10SE3301D
R 104	(B,274,134)	RN1/10SE1002D
R 105	(B,278,137)	RN1/10SE1002D
R 106	(B,267,143)	RN1/10SE1501D
R 107	(B,265,138)	RN1/10SE1002D
R 108	(B,274,137)	RN1/10SE1002D
R 118	(B,283,169)	RN1/10SE2201D
R 119	(B,286,166)	RN1/10SE2201D
R 121	(B,292,186)	RN1/10SE1000D
R 201	(B,295,84)	RN1/10SE4700D
R 202	(B,278,99)	RN1/10SE2202D
R 203	(B,278,96)	RN1/10SE3301D
R 204	(B,274,89)	RN1/10SE1002D
R 205	(B,276,93)	RN1/10SE1002D
R 206	(B,264,95)	RN1/10SE1501D
R 207	(B,269,89)	RN1/10SE1002D
R 208	(B,274,93)	RN1/10SE1002D
R 218	(B,287,63)	RN1/10SE2201D
R 219	(B,290,65)	RN1/10SE2201D
R 221	(B,293,48)	RN1/10SE1000D
R 301	(B,293,130)	RN1/10SE4700D
R 302	(B,278,130)	RN1/10SE2202D

Circuit Symbol and No.		Part No.
R 303	(B,275,130)	RN1/10SE3301D
R 304	(B,277,120)	RN1/10SE1002D
R 305	(B,276,124)	RN1/10SE1002D
R 306	(B,264,127)	RN1/10SE1501D
R 307	(B,265,121)	RN1/10SE1002D
R 308	(B,274,125)	RN1/10SE1002D
R 318	(B,285,155)	RN1/10SE2201D
R 319	(B,287,155)	RN1/10SE2201D
R 321	(B,292,169)	RN1/10SE1000D
R 401	(B,292,103)	RN1/10SE4700D
R 402	(B,280,110)	RN1/10SE2202D
R 403	(B,275,108)	RN1/10SE3301D
R 404	(B,274,102)	RN1/10SE1002D
R 405	(B,276,105)	RN1/10SE1002D
R 406	(B,267,112)	RN1/10SE1501D
R 407	(B,265,106)	RN1/10SE1002D
R 408	(B,274,105)	RN1/10SE1002D
R 418	(B,288,75)	RN1/10SE2201D
R 419	(B,284,80)	RN1/10SE2201D
R 421	(B,293,63)	RN1/10SE1000D
R 601	(A,22,121)	RD1/4PU102J
R 602	(B,23,116)	RS1/16S473J
R 603	(B,58,139)	RS1/16S103J
R 604	(B,60,138)	RS1/16S103J
R 605	(B,65,139)	RS1/16S222J
R 606	(B,67,143)	RS1/16S472J
R 607	(B,72,117)	RS1/16S472J
R 608	(B,74,117)	RS1/16S472J
R 609	(B,77,117)	RS1/16S472J
R 610	(B,68,133)	RS1/16S103J
R 611	(B,83,109)	RS1/16S223J
R 612	(B,90,97)	RS1/16S223J
R 613	(B,71,98)	RS1/16S223J
R 614	(A,65,96)	RD1/4PU472J
R 615	(B,62,122)	RS1/16S221J
R 616	(A,58,116)	RD1/4PU152J
R 617	(B,79,100)	RS1/16S103J
R 618	(B,81,99)	RS1/16S223J
R 620	(A,61,108)	RD1/4PU561J
R 622	(B,77,95)	RS1/16S202J
R 623	(B,97,109)	RS1/16S102J
R 624	(B,93,109)	RS1/16S103J
R 625	(B,90,109)	RS1/16S105J
R 626	(B,88,103)	RS1/16S101J
R 627	(B,98,107)	RS1/16S273J
R 630	(B,101,125)	RS1/16S472J
R 631	(B,104,124)	RS1/16S472J
R 632	(B,99,126)	RS1/16S472J
R 633	(B,93,138)	RS1/16S272J
R 634	(B,93,131)	RS1/16S272J
R 635	(B,91,138)	RS1/16S272J
R 636	(B,95,131)	RS1/16S272J
R 637	(A,70,129)	RD1/2PM471J
R 641	(B,144,118)	RS1/16S563J
R 642	(B,155,111)	RS1/16S221J
R 643	(A,161,116)	RD1/2PM222J
R 644	(B,176,116)	RS1/16S103J
R 647	(B,137,120)	RS1/16S103J
R 648	(B,174,122)	RS1/16S683J
R 649	(B,178,120)	RS1/16S103J
R 650	(B,182,114)	RS1/16S103J
R 651	(B,185,110)	RS1/16S683J
R 652	(B,179,113)	RS1/16S103J
R 653	(B,187,124)	RS1/16S223J
R 655	(B,140,120)	RS1/16S103J
R 662	(B,74,106)	RS1/16S0R0J
R 664	(B,78,108)	RS1/16S0R0J
R 701	(B,115,136)	RS1/10S332J
R 702	(B,117,136)	RS1/10S332J
R 703	(B,115,132)	RS1/16S472J
R 704	(B,117,132)	RS1/16S472J
R 705	(A,52,190)	RS1PMF820J
R 706	(A,77,190)	RS1PMF820J
R 707	(A,47,195)	RS1PMF820J
R 708	(A,76,195)	RS1PMF820J
R 709	(A,49,186)	RS1/2PMF100J
R 710	(A,81,186)	RS1/2PMF100J
R 712	(A,120,186)	RS1/2PMF100J
R 713	(A,124,182)	RS1/2PMF100J
R 714	(A,212,143) 10 ohm	CCN1169
R 715	(A,212,123) 10 ohm	CCN1169
R 716	(A,241,139)	RD1/4PU472J
R 717	(A,241,126)	RD1/4PU472J
R 740	(A,102,137)	RD1/4PU100J
R 801	(B,115,101)	RS1/10S332J
R 802	(B,118,101)	RS1/10S332J
R 803	(B,115,97)	RS1/16S472J
R 804	(B,118,97)	RS1/16S472J
R 805	(A,82,38)	RS1PMF820J
R 806	(A,59,42)	RS1PMF820J
R 807	(A,80,42)	RS1PMF820J
R 808	(A,54,38)	RS1PMF820J
R 809	(A,79,46)	RS1/2PMF100J
R 810	(A,49,47)	RS1/2PMF100J
R 812	(A,119,46)	RS1/2PMF100J
R 813	(A,125,50)	RS1/2PMF100J
R 814	(A,212,90) 10 ohm	CCN1169
R 815	(A,212,110) 10 ohm	CCN1169
R 816	(A,241,92)	RD1/4PU472J
R 817	(A,241,104)	RD1/4PU472J
R 840	(A,101,96)	RD1/4PU100J
R 1101	(A,253,158)	RD1/2PM103J
R 1102	(A,246,160)	RD1/4PU820J
R 1103	(A,275,155)	RD1/4PU103J
R 1104	(A,230,155)	RD1/4PU103J
R 1105	(A,273,155)	RD1/4PU151J
R 1106	(A,234,155)	RD1/4PU151J
R 1107	(A,274,162)	RD1/4PU102J
R 1108	(A,229,163)	RD1/4PU102J
R 1109	(A,261,153)	RD1/4PU221J
R 1110	(A,246,153)	RD1/4PU221J
R 1111	(A,261,161)	RD1/4PU221J
R 1112	(A,234,163)	RD1/4PU221J
R 1113	(A,277,162)	RD1/4PU221J
R 1114	(A,232,163)	RD1/4PU221J
R 1115	(A,251,193)	RD1/4PU103J
R 1116	(A,254,190)	RD1/4PU182J
R 1117	(A,269,168) 100 ohm	CCN1171
R 1118	(A,239,168) 100 ohm	CCN1171
R 1119	(A,253,169)	RD1/4PU821J

Circuit Symbol and No.		Part No.
R 1120	(A,267,178) 33 ohm	CCN1170
R 1121	(A,243,178) 33 ohm	CCN1170
R 1122	(A,252,181)	RD1/4PU121J
R 1123	(A,258,189) 22 ohm	CCN1168
R 1124	(A,227,189) 22 ohm	CCN1168
R 1125	(A,270,194) 0.1 ohm	CCN1090
R 1126	(A,238,194) 0.1 ohm	CCN1090
R 1127	(A,265,189)	RD1/4PU272J
R 1128	(A,279,196)	RD1/4PU273J
R 1129	(A,284,188)	RD1/4PU474J
R 1130	(A,158,135)	RD1/4PU473J
R 1131	(A,47,177)	RD1/4PU473J
R 1132	(A,18,199)	RS1/2PMF100J
R 1141	(B,259,153)	RN1/10SE5600D
R 1142	(B,248,151)	RN1/10SE5600D
R 1201	(A,253,75)	RD1/2PM103J
R 1202	(A,246,72)	RD1/4PU820J
R 1203	(A,275,78)	RD1/4PU103J
R 1204	(A,230,78)	RD1/4PU103J
R 1205	(A,272,78)	RD1/4PU151J
R 1206	(A,234,78)	RD1/4PU151J
R 1207	(A,276,70)	RD1/4PU102J
R 1208	(A,231,70)	RD1/4PU102J
R 1209	(A,261,80)	RD1/4PU221J
R 1210	(A,246,80)	RD1/4PU221J
R 1211	(A,261,72)	RD1/4PU221J
R 1212	(A,234,70)	RD1/4PU221J
R 1213	(A,274,70)	RD1/4PU221J
R 1214	(A,229,70)	RD1/4PU221J
R 1215	(A,252,43)	RD1/4PU103J
R 1216	(A,244,46)	RD1/4PU182J
R 1217	(A,269,65) 100 ohm	CCN1171
R 1218	(A,238,64) 100 ohm	CCN1171
R 1219	(A,254,51)	RD1/4PU821J
R 1220	(A,267,55) 33 ohm	CCN1170
R 1221	(A,243,55) 33 ohm	CCN1170
R 1222	(A,253,64)	RD1/4PU121J
R 1223	(A,280,43) 22 ohm	CCN1168
R 1224	(A,248,43) 22 ohm	CCN1168
R 1225	(A,270,39) 0.1 ohm	CCN1090
R 1226	(A,238,39) 0.1 ohm	CCN1090
R 1227	(A,259,52)	RD1/4PU272J
R 1228	(A,282,34)	RD1/4PU273J
R 1229	(A,284,47)	RD1/4PU474J
R 1230	(A,158,98)	RD1/4PU473J
R 1231	(A,47,55)	RD1/4PU473J
R 1232	(A,19,33)	RS1/2PMF100J
R 1241	(B,259,80)	RN1/10SE5600D
R 1242	(B,248,80)	RN1/10SE5600D
R 1301	(A,201,158)	RD1/2PM103J
R 1302	(A,194,160)	RD1/4PU820J
R 1303	(A,180,155)	RD1/4PU103J
R 1304	(A,224,155)	RD1/4PU103J
R 1305	(A,182,155)	RD1/4PU151J
R 1306	(A,222,155)	RD1/4PU151J
R 1307	(A,177,163)	RD1/4PU102J
R 1308	(A,222,162)	RD1/4PU102J
R 1309	(A,194,153)	RD1/4PU221J
R 1310	(A,209,153)	RD1/4PU221J
R 1311	(A,182,163)	RD1/4PU221J

Circuit Symbol and No.		Part No.
R 1312	(A,209,161)	RD1/4PU221J
R 1313	(A,180,163)	RD1/4PU221J
R 1314	(A,224,162)	RD1/4PU221J
R 1315	(A,199,190)	RD1/4PU103J
R 1316	(A,202,190)	RD1/4PU182J
R 1317	(A,186,168) 100 ohm	CCN1171
R 1318	(A,217,168) 100 ohm	CCN1171
R 1319	(A,201,169)	RD1/4PU821J
R 1320	(A,192,178) 33 ohm	CCN1170
R 1321	(A,211,178) 33 ohm	CCN1170
R 1322	(A,200,181)	RD1/4PU121J
R 1323	(A,175,188) 22 ohm	CCN1168
R 1324	(A,207,189) 22 ohm	CCN1168
R 1325	(A,186,194) 0.1 ohm	CCN1090
R 1326	(A,218,194) 0.1 ohm	CCN1090
R 1327	(A,211,181)	RD1/4PU272J
R 1328	(A,195,196)	RD1/4PU273J
R 1329	(A,189,188)	RD1/4PU474J
R 1330	(A,161,135)	RD1/4PU473J
R 1331	(A,44,175)	RD1/4PU473J
R 1332	(A,24,172)	RS1/2PMF100J
R 1341	(B,196,151)	RN1/10SE5600D
R 1342	(B,207,152)	RN1/10SE5600D
R 1401	(A,201,75)	RD1/2PM103J
R 1402	(A,194,72)	RD1/4PU820J
R 1403	(A,178,78)	RD1/4PU103J
R 1404	(A,223,78)	RD1/4PU103J
R 1405	(A,182,78)	RD1/4PU151J
R 1406	(A,220,78)	RD1/4PU151J
R 1407	(A,179,70)	RD1/4PU102J
R 1408	(A,224,70)	RD1/4PU102J
R 1409	(A,194,80)	RD1/4PU221J
R 1410	(A,209,80)	RD1/4PU221J
R 1411	(A,182,70)	RD1/4PU221J
R 1412	(A,209,72)	RD1/4PU221J
R 1413	(A,177,70)	RD1/4PU221J
R 1414	(A,222,70)	RD1/4PU221J
R 1415	(A,200,40)	RD1/4PU103J
R 1416	(A,202,40)	RD1/4PU182J
R 1417	(A,190,65) 100 ohm	CCN1171
R 1418	(A,217,65) 100 ohm	CCN1171
R 1419	(A,204,51)	RD1/4PU821J
R 1420	(A,191,56) 33 ohm	CCN1170
R 1421	(A,211,55) 33 ohm	CCN1170
R 1422	(A,201,64)	RD1/4PU121J
R 1423	(A,196,43) 22 ohm	CCN1168
R 1424	(A,228,43) 22 ohm	CCN1168
R 1425	(A,186,39) 0.1 ohm	CCN1090
R 1426	(A,218,39) 0.1 ohm	CCN1090
R 1427	(A,208,42)	RD1/4PU272J
R 1428	(A,178,46)	RD1/4PU273J
R 1429	(A,174,78)	RD1/4PU474J
R 1430	(A,161,98)	RD1/4PU473J
R 1431	(A,44,58)	RD1/4PU473J
R 1432	(A,24,57)	RS1/2PMF100J
R 1441	(B,196,80)	RN1/10SE5600D
R 1442	(B,207,81)	RN1/10SE5600D

CAPACITORS

Circuit Symbol and No.		Part No.
C 101	(B,295,146)	CCSQCH471J50
C 102	(A,289,150) 10 µF/50 V	CCH1543
C 103	(A,281,138)	CQHA472J2A
C 104	(B,276,137)	CCSQCH330J50
C 105	(A,260,138) 22 µF/16 V	CCH1784
C 106	(B,258,138)	CKSQYB103K50
C 107	(B,263,137)	CCSQCH330J50
C 108	(A,252,138) 22 µF/16 V	CCH1784
C 109	(B,251,138)	CKSQYB103K50
C 201	(B,295,79)	CCSQCH471J50
C 202	(A,289,83) 10 µF/50 V	CCH1543
C 203	(A,281,95)	CQHA472J2A
C 204	(B,278,93)	CCSQCH330J50
C 205	(A,260,95) 22 µF/16 V	CCH1784
C 206	(B,258,95)	CKSQYB103K50
C 207	(B,269,87)	CCSQCH330J50
C 208	(A,252,95) 22 µF/16 V	CCH1784
C 209	(B,251,95)	CKSQYB103K50
C 301	(B,294,122)	CCSQCH471J50
C 302	(A,292,131) 10 µF/50 V	CCH1543
C 303	(A,281,126)	CQHA472J2A
C 304	(B,278,125)	CCSQCH330J50
C 305	(A,260,127) 22 µF/16 V	CCH1784
C 306	(B,258,127)	CKSQYB103K50
C 307	(B,263,121)	CCSQCH330J50
C 308	(A,252,127) 22 µF/16 V	CCH1784
C 309	(B,251,127)	CKSQYB103K50
C 401	(B,291,99)	CCSQCH471J50
C 402	(A,292,102) 10 µF/50 V	CCH1543
C 403	(A,281,104)	CQHA472J2A
C 404	(B,278,103)	CCSQCH330J50
C 405	(A,260,106) 22 µF/16 V	CCH1784
C 406	(B,258,106)	CKSQYB103K50
C 407	(B,263,106)	CCSQCH330J50
C 408	(A,252,106) 22 µF/16 V	CCH1784
C 409	(B,251,106)	CKSQYB103K50
C 601	(A,22,130)	CFTNA103J50
C 602	(A,23,76)	CFTNA224J50
C 603	(A,33,99)	CQMA103J50
C 604	(B,21,116)	CKSRYB103K50
C 605	(B,84,117)	CKSRYB103K50
C 606	(B,82,117)	CKSRYB103K50
C 607	(A,79,126)	CEAT101M16
C 608	(B,85,109)	CKSRYB104K50
C 609	(B,87,109)	CKSRYB103K50
C 610	(A,71,102)	CEAT330M16
C 611	(B,88,98)	CKSRYB103K50
C 612	(A,137,116)	CEAT471M16
C 613	(B,149,122)	CKSRYB104K50
C 614	(B,95,108)	CCSRCH102J50
C 615	(A,88,102)	CEAT100M50
C 616	(A,79,102)	CEAT221M10
C 617	(A,100,102)	CEAT2R2M50
C 618	(A,88,126)	CEAT470M50
C 619	(B,65,102)	CKSRYB473K50
C 620	(A,157,126)	CEANP221M10
C 621	(A,157,107)	CEANP221M10
C 622	(B,77,137)	CKSRYB103K50
C 623	(B,73,98)	CKSRYB103K50
C 641	(B,99,91)	CKSRYB104K50

Circuit Symbol and No.		Part No.
C 642	(B,97,91)	CKSRYB104K50
C 643	(B,86,126)	CKSRYB104K50
C 644	(B,89,126)	CKSRYB103K50
C 645	(B,58,132)	CKSRYB104K50
C 701	(A,60,186)	CQHA472J2A
C 702	(A,69,186)	CQHA472J2A
C 703	(A,46,143) 6 800 µF/16 V	CCH1474(P35)
C 707	(A,141,171) 4 700 µF/35 V	CCH1767
C 708	(A,141,138) 4 700 µF/35 V	CCH1767
C 711	(A,199,131) 470 µF/50 V	CCH1602(P35)
C 712	(A,181,131) 470 µF/50 V	CCH1602(P35)
C 715	(A,222,125)	CEAT101M35
C 716	(A,222,141)	CEAT101M35
C 717	(A,213,129) 10 µF/50 V	CCH1543
C 718	(A,213,137) 10 µF/50 V	CCH1543
C 719	(B,212,131)	CKSQYB103K50
C 720	(B,212,135)	CKSQYB103K50
C 721	(A,237,139) 47 µF/25 V	CCH1544
C 722	(A,230,138) 47 µF/25 V	CCH1544
C 801	(A,68,46)	CQHA472J2A
C 802	(A,59,47)	CQHA472J2A
C 803	(A,46,90) 6 800 µF/16 V	CCH1474(P35)
C 807	(A,141,62) 4 700 µF/35 V	CCH1767
C 808	(A,141,95) 4 700 µF/35 V	CCH1767
C 811	(A,199,102) 470 µF/50 V	CCH1602(P35)
C 812	(A,181,102) 470 µF/50 V	CCH1602(P35)
C 815	(A,222,108)	CEAT101M35
C 816	(A,222,92)	CEAT101M35
C 817	(A,213,104) 10 µF/50 V	CCH1543
C 818	(A,213,95) 10 µF/50 V	CCH1543
C 819	(B,213,102)	CKSQYB103K50
C 820	(B,213,98)	CKSQYB103K50
C 821	(A,237,94) 47 µF/25 V	CCH1544
C 822	(A,230,94) 47 µF/25 V	CCH1544
C 1101	(A,288,161) 22 µF/16 V	CCH1784
C 1102	(B,236,149)	CCSQCH221J50
C 1103	(B,262,166)	CCSQCH330J50
C 1104	(B,266,166)	CCSQCH330J50
C 1105	(B,238,166)	CCSQCH330J50
C 1106	(B,242,165)	CCSQCH330J50
C 1107	(A,253,164) 47 µF/25 V	CCH1544
C 1108	(B,287,196)	CKSQYB104K50
C 1109	(A,26,201)	CFTNA273J50
C 1151	(B,35,170)	CKSRYB104K50
C 1201	(A,288,72) 22 µF/16 V	CCH1784
C 1202	(B,233,84)	CCSQCH221J50
C 1203	(B,261,67)	CCSQCH330J50
C 1204	(B,265,67)	CCSQCH330J50
C 1205	(B,237,67)	CCSQCH330J50
C 1206	(B,241,67)	CCSQCH330J50
C 1207	(A,253,69) 47 µF/25 V	CCH1544
C 1208	(B,292,38)	CKSQYB104K50
C 1209	(A,26,30)	CFTNA273J50
C 1251	(B,36,62)	CKSRYB104K50
C 1301	(A,225,148) 22 µF/16 V	CCH1784
C 1302	(B,208,146)	CCSQCH221J50
C 1303	(B,185,166)	CCSQCH330J50
C 1304	(B,189,166)	CCSQCH330J50
C 1305	(B,210,166)	CCSQCH330J50
C 1306	(B,214,166)	CCSQCH330J50

Circuit Symbol and No.		Part No.
C 1307	(A,201,164) 47 µF/25 V	CCH1544
C 1308	(B,174,157)	CKSQYB104K50
C 1309	(A,21,162)	CFTNA273J50
C 1401	(A,225,85) 22 µF/16 V	CCH1784
C 1402	(B,181,84)	CCSQCH221J50
C 1403	(B,185,67)	CCSQCH330J50
C 1404	(B,189,67)	CCSQCH330J50
C 1405	(B,209,67)	CCSQCH330J50
C 1406	(B,213,67)	CCSQCH330J50
C 1407	(A,201,69) 47 µF/25 V	CCH1544
C 1408	(B,180,44)	CKSQYB104K50
C 1409	(A,23,67)	CFTNA273J50