2. EXPLODED VIEWS AND PARTS LIST

*NOTES : • Parts marked by " * " are generally unavailable because they are not in our Master Spare Parts List.*
• The ⚠ mark found on some component parts indicates the importance of the safety factor of the part. Therefore, when replacing, be sure to use parts of identical designation.
• Screw adjacent to▽mark on the product are used for disassembly.
• For the applying amount of lubricants or glue, follow the instructions in this manual. (In the case of no amount instructions,apply as you think it appropriate.)

2.1 PACKING

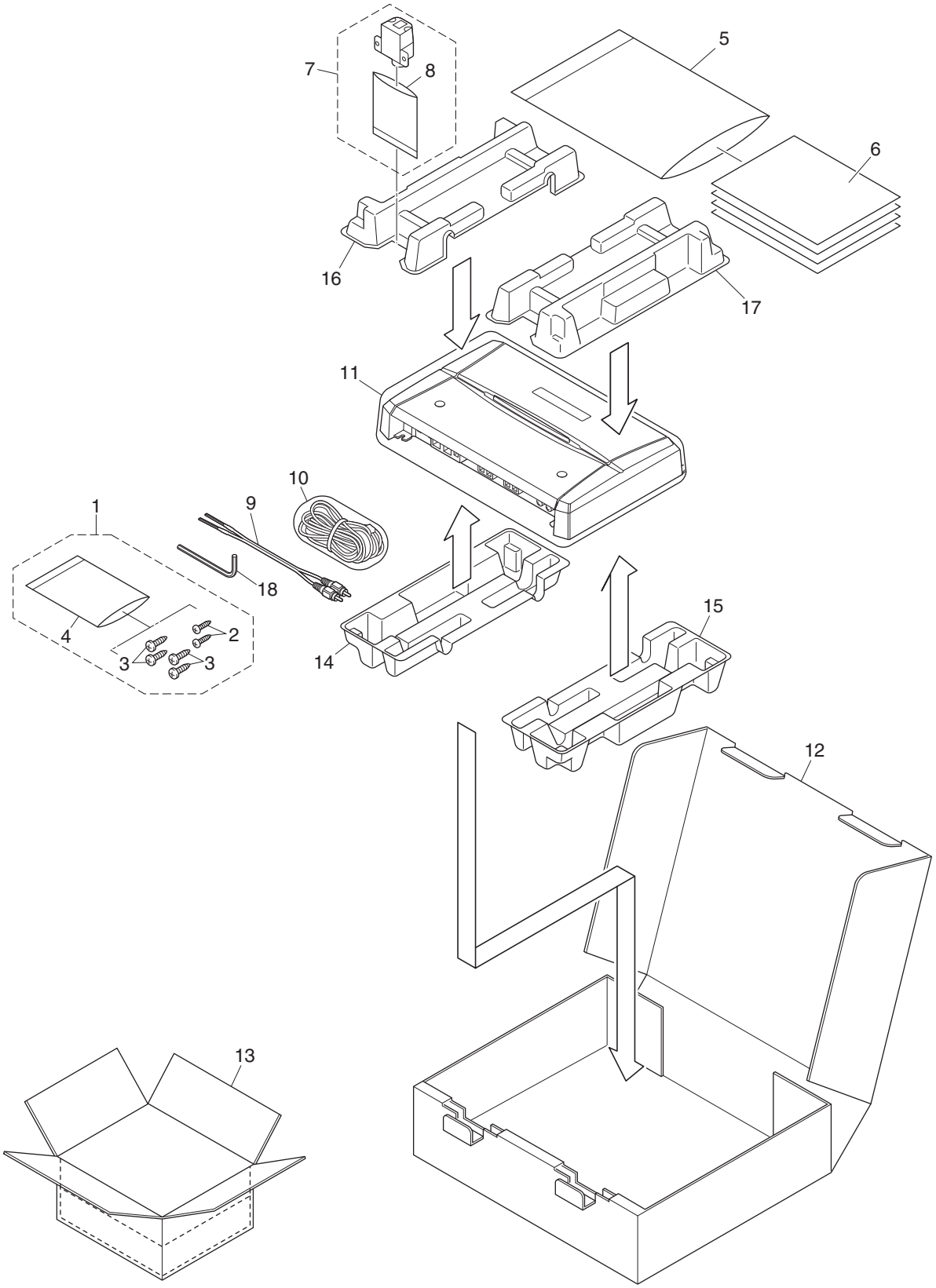

(1) PACKING SECTION PARTS LIST

Mark	No.	Description	Part No.
	1	Screw Assy	CEA5328
	2	Screw	BYC30P100FTB
	3	Screw	BYC40P180FTB
*	4	Polyethylene Sheet	CNM4338
	5	Polyethylene Bag	CEG1116
	6-1	Owner's Manual	See Contrast table(2)
	6-2	Owner's Manual	See Contrast table(2)
*	6-3	Warranty Card	See Contrast table(2)
	6-4	Caution Card	YRP5001
	7	Remote Control Assy	CXC4064
*	8	Polyethylene Bag	CEG1171
	9	Cord Assy	YDE5010
	10	Cord Assy	YDP5002
	11	Polyethylene Bag	See Contrast table(2)
	12	Carton	See Contrast table(2)
	13	Contain Box	See Contrast table(2)
	14	Protector	YHP5006
	15	Protector	YHP5007
	16	Protector	YHP5012
	17	Protector	YHP5013
	18	Shaft	YLP5001

(2) CONTRAST TABLE

PRS-D2100T/XU/UC, PRS-D210/XU/EW5 and PRS-D2100T/XU/ES are constructed the same except for the following:

Mark	No.	Description	PRS-D2100T/XU/UC	PRS-D210/XU/EW5	PRS-D2100T/XU/ES
	6-1	Owner's Manual	YRD5126	YRD5123	YRD5124
	6-2	Owner's Manual	Not used	Not used	YRD5125
*	6-3	Warranty Card	CRY1070	CRY1157	Not used
	11	Polyethylene Bag	YEG5004	YEG5003	YEG5003
	12	Carton	YHG5153	YHG5151	YHG5152
	13	Contain Box	YHL5153	YHL5151	YHL5152

Owner's Manual

Part No.	Language
YRD5126	English, French, Spanish
YRD5123	English, Spanish, German, French, Italian, Dutch, Russian
YRD5124	English, Spanish
YRD5125	Portuguese(B), Arabic

2.2 EXTERIOR

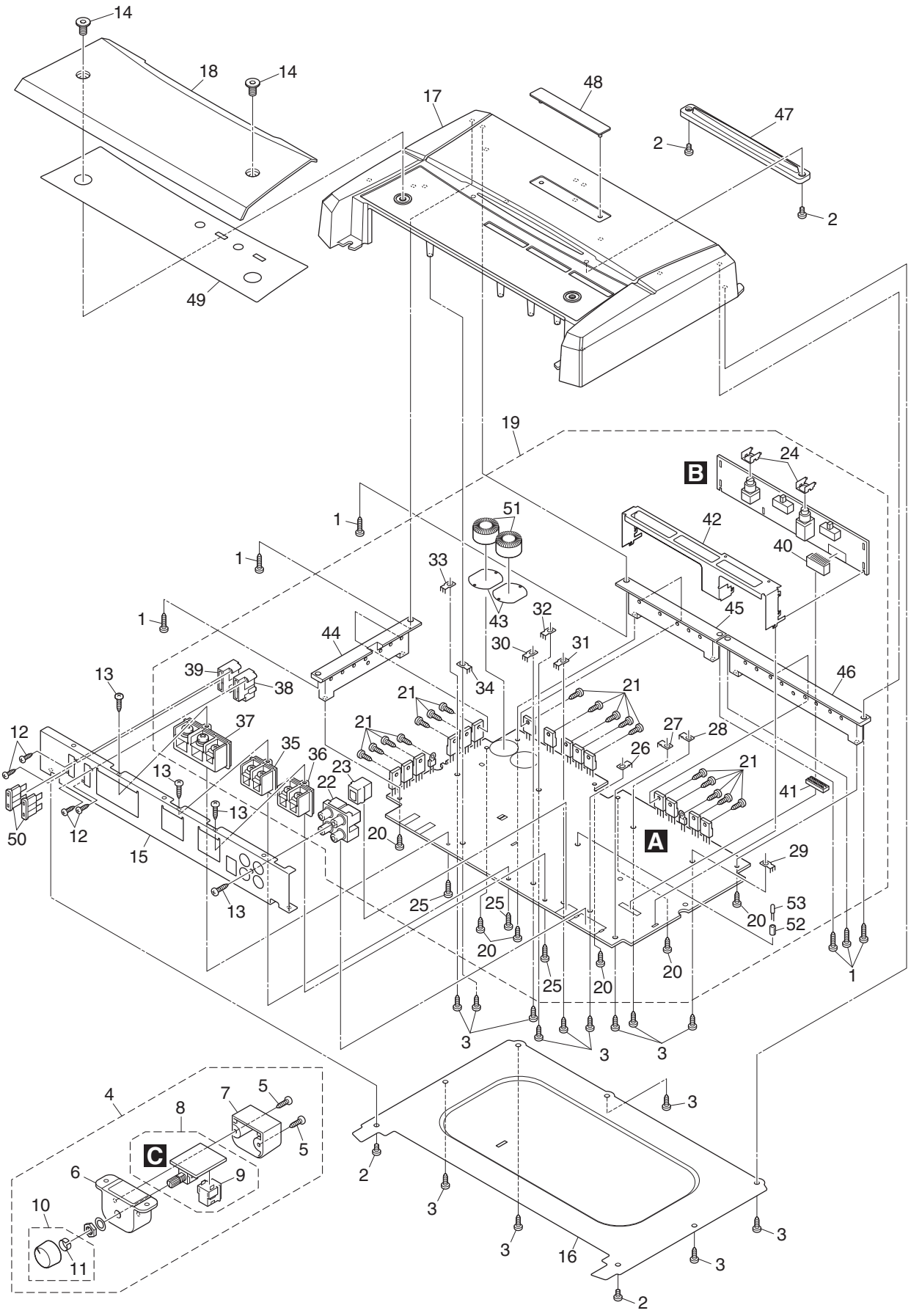

14
18
14
17
48
47
2
2
49
19
B
24
51
42
40
1
1
33
43
32
45
1
44
30
31
13
39
38
34
21
21
46
12
37
21
27
28
35
36
26
13
23
22
21
41
13
50
12
15
20
A
29
13
25
25
53
20
52
20
20
25
20
1
3
3
3
4
7
5
8
5
C
6
9
10
11
3
2
3
3
3
16
3
2

(1) EXTERIOR SECTION PARTS LIST

Mark	No.	Description	Part No.
	1	Screw	BBZ30P100FTB
	2	Screw	BSZ30P050FTC
	3	Screw(M3 x 8)	CBA2011
	4	Remote Control Assy	CXC4064
	5	Screw	BPZ20P100FTB
	6	Grille	CNS8140
	7	Cover	CNS8141
	8	Remote Control Unit	CWM9848
	9	Connector(CN1351)	CKS4962
	10	Knob Unit	CXC4335
	11	Spring	CBL1692
	12	Screw	PPZ20P060FTB
	13	Screw	PPZ30P100FTB
	14	Screw(M6 x 10)	YBA5002
	15	Panel	YNB5004
	16	Case	YNB5022
	17	Heat Sink	YNR5057
	18	Cover	See Contrast table(2)
	19	Amp Unit	YWH5014
	20	Screw	BBZ30P080FSN
	21	Screw(M3 x 8)	CBA2011
	22	Pin Jack(CN801)	YKB5001
	23	Connector(CN501)	CKS4962
	24	Holder	CND2466
	25	Screw	PPZ30P100FSN
	26	Terminal(CN502)	VNF1084
	27	Terminal(CN800)	VNF1084
	28	Terminal(CN301)	VNF1084
	29	Terminal(CN302)	VNF1084
	30	Terminal(CN303)	VNF1084
	31	Terminal(CN304)	VNF1084
	32	Terminal(CN652)	VNF1084
	33	Terminal(CN651)	VNF1084
	34	Terminal(CN601)	VNF1084
	35	Terminal(CN305)	YKE5001
	36	Terminal(CN306)	YKE5001
	37	Terminal(CN600)	YKE5002
	38	Fuse Holder(CN602)	YKR5001
	39	Fuse Holder(CN603)	YKR5001
	40	Connector(CN102)	YKS5008
	41	Connector(CN101)	YKS5009
	42	Holder	YND5008
	43	Insulator	YNM5045
	44	Sub Heat Sink	YNR5068
	45	Sub Heat Sink	YNR5067
	46	Sub Heat Sink	YNR5066
	47	Lighting Conductor Unit	YXA5256
*	48	Badge	See Contrast table(2)
*	49	Plate	See Contrast table(2)
⚠	50	Fuse(30 A)(FU601, FU602)	CEK1330
	51	Choke Coil(L651, L652)	CTH1326
	52	Spacer	YNS5118
	53	LED(D608)	NSPB346BS-5859

(2) CONTRAST TABLE

PRS-D2100T/XU/UC, PRS-D210/XU/EW5 and PRS-D2100T/XU/ES are constructed the same except for the following:

Mark	No.	Description	PRS-D2100T/XU/UC	PRS-D210/XU/EW5	PRS-D2100T/XU/ES
	18	Cover	YNR5072	YNR5070	YNR5071
*	48	Badge	YAH5009	YAH5007	YAH5007
*	49	Plate	YAH5020	YAH5014	YAH5020

5. ELECTRICAL PARTS LIST

NOTE:

- *Parts whose parts numbers are omitted are subject to being not supplied.*
- *The part numbers shown below indicate chip components.*

  Chip Resistor

  RS1/◯S◯◯◯J,RS1/◯◯S◯◯◯J

  Chip Capacitor (except for CQS.....)

  CKS....., CCS....., CSZS.....
- *The ⚠ mark found on some component parts indicates the importance of the safety factor of the part. Therefore, when replacing, be sure to use parts of identical designation.*
- *Meaning of the figures and others in the parentheses in the parts list.*

  Example) IC 301 is on the point (face A, 91 of x-axis, and 111 of y-axis) of the corresponding PC board.

  IC 301 (A, 91, 111) IC NJM2068V

Circuit Symbol and No. **Part No.**

Unit Number : YWH5014

Unit Name : Amp Unit

Unit Number : CWM9848

Unit Name : Remote Control Unit

A B

Unit Number : YWH5014

Unit Name : Amp Unit

Amp Unit
Consists of
Amp PCB
Control PCB

MISCELLANEOUS

IC 101	(B,28,79) IC	NJM4558MD
IC 102	(B,19,115) IC	NJM4558MD
IC 103	(B,19,69) IC	NJM4558MD
IC 104	(B,23,93) IC	NJM4558MD
IC 105	(B,267,79) IC	OPA2134UA
IC 106	(B,279,79) IC	OPA2134UA
IC 300	(B,265,99) IC	LT1358CS8
IC 302	(B,236,85) IC	ICC1
IC 303	(B,195,130) IC	ICC3
IC 304	(B,224,130) IC	ICC3
IC 501	(B,221,36) IC	MAX309ESE
IC 601	(A,99,27) IC	PA2027A
IC 602	(B,104,60) IC	UPC494GS
IC 681	(B,122,129) Regulator IC	NJM78M05DL1A
IC 682	(B,107,129) Regulator IC	NJM79M05DL1A
IC 801	(B,261,28) IC	NJM2068MD
IC 802	(B,279,31) IC	NJM2068MD
Q 201	(B,259,62) Transistor	2SC4081
Q 202	(B,276,63) Transistor	2SC4081
Q 203	(B,266,57) Transistor	DTA124EUA
Q 204	(B,149,51) Transistor	DTC144EUA
Q 303	(B,219,92) Transistor	UMT1N

Circuit Symbol and No.		Part No.
Q 304	(B,236,106) Transistor	UMT1N
Q 305	(A,194,160) FET	2SK3645-01MR
Q 306	(A,232,160) FET	2SK3645-01MR
Q 307	(A,181,160) FET	2SK3645-01MR
Q 308	(A,219,160) FET	2SK3645-01MR
Q 601	(B,122,19) Transistor	2SC4081
Q 602	(B,104,42) Transistor	DTC114TUA
Q 603	(B,99,38) Transistor	DTA114EUA
Q 604	(A,112,43) Transistor	2SB1243
Q 605	(B,124,35) Transistor	2SC4081
Q 606	(B,121,35) Transistor	DTC114TUA
Q 607	(B,109,50) Transistor	2SA1576A
Q 611	(B,118,23) Transistor	2SA1576A
Q 650	(B,126,19) Transistor	DTC124EUA
Q 651	(B,101,74) Transistor	2SD1766
Q 652	(B,101,84) Transistor	2SB1188
Q 653	(B,109,84) Transistor	2SB1188
Q 654	(B,109,74) Transistor	2SD1766
Q 655	(A,7,58) Transistor	FKV550N
Q 656	(A,7,45) Transistor	FKV550N
Q 657	(A,7,32) Transistor	FKV550N
Q 658	(A,7,126) Transistor	FKV550N
Q 659	(A,7,112) Transistor	FKV550N
Q 660	(A,7,99) Transistor	FKV550N
Q 661	(A,90,160) Transistor	2SD2395
Q 662	(A,76,160) Transistor	2SB1566
Q 681	(A,103,160) Transistor	2SD2395
Q 901	(B,135,33) Transistor	2SA1576A
Q 902	(B,138,33) Transistor	2SC4081
Q 903	(B,141,33) Transistor	2SC4081
D 201	(B,270,57) Diode	DAP202U
D 203	(B,154,53) Diode	MA111
D 301	(B,204,128) Diode	DAP202U
D 302	(B,232,128) Diode	DAP202U
D 303	(B,196,136) Diode	DAP202U
D 304	(B,224,136) Diode	DAP202U
D 305	(A,208,130) Diode	ERA92-02VH
D 306	(A,236,130) Diode	ERA92-02VH
D 309	(B,274,97) Diode	DAP202U
D 310	(B,274,92) Diode	DAN202U
D 311	(B,226,60) Diode	DAN202U

Circuit Symbol and No.		Part No.
D 312	(B,237,60) Diode	DAP202U
D 382	(B,193,77) Diode	UDZS7R5(B)
D 383	(B,193,71) Diode	UDZS7R5(B)
D 501	(B,226,29) Diode	UDZS16(B)
D 502	(B,226,43) Diode	UDZS16(B)
D 601	(A,53,21) Diode	RM4Z-LFJ4
D 602	(B,119,15) Diode	UDZS7R5(B)
D 603	(B,88,28) Diode	1SR154-400
D 604	(B,88,32) Diode	1SR154-400
D 605	(B,131,44) Diode	MA111
D 606	(B,118,38) Diode	MA111
D 608	(A,149,73) LED	NSPB346BS-5859
D 609	(B,34,100) Diode	RR274EA-400
D 610	(B,34,107) Diode	RR274EA-400
D 611	(B,85,84) Diode	RR274EA-400
D 612	(B,85,77) Diode	RR274EA-400
D 650	(B,243,10) Diode	DAN202U
D 651	(B,89,36) Diode	DAN202U
D 652	(B,93,36) Diode	MA111
D 653	(A,37,160) Diode	FML22S
D 654	(A,59,160) Diode	FML22R
D 655	(B,108,139) Diode	UDZS16(B)
D 656	(B,87,142) Diode	UDZS16(B)
D 681	(B,122,139) Diode	UDZS11(B)
D 901	(B,132,33) Diode	MA111
D 902	(A,143,38) Diode	ERA15-02VH
D 904	(B,129,23) Diode	MA111
L 303	(A,195,120) Choke Coil 19.5 µH	YTH5006
L 304	(A,223,120) Choke Coil 19.5 µH	YTH5006
L 601	(A,46,44) Choke Coil 50 µH	CTH1341
L 651	(A,34,123) Choke Coil 320 µH	CTH1326
L 652	(A,61,123) Choke Coil 320 µH	CTH1326
L 801	(A,252,19) Ferri-Inductor	CTF1007
L 802	(A,265,10) Ferri-Inductor	CTF1007
T 651	(A,55,77) Transformer	YTT5006
RY301	(A,149,27) Relay	YSR5001
RY302	(A,186,27) Relay	YSR5001
TH651	(A,8,70) Thermistor	CCX1013
TH652	(A,211,158) Thermistor	CCX1013
TH653	(A,79,57) Thermistor	CCX1064
S 101	(A,9,76) Switch(LPF/HPF)	CSH1029
S 102	(A,9,121) Slide Switch(INPUT)	CSH1042
S 601	(A,94,54) Switch(BFC)	HSH-156
VR101	(A,14,51) Volume 25 kΩ(E)	YCS5001
VR102	(A,14,95) Volume 10 kΩ(A)	CCS1265
⚠FU601	Fuse 30 A	CEK1330
⚠FU602	Fuse 30 A	CEK1330

RESISTORS

R 101	(B,29,91)	RS1/16S103J
R 102	(B,23,123)	RS1/16S103J
R 103	(B,27,85)	RS1/16S103J
R 104	(B,18,123)	RS1/16S103J
R 105	(B,24,80)	RS1/16S103J
R 106	(B,15,119)	RS1/16S103J
R 107	(B,32,79)	RS1/16S472J
R 108	(B,24,115)	RS1/16S472J
R 109	(B,29,72)	RS1/16S103J
R 110	(B,20,109)	RS1/16S103J
R 111	(B,29,70)	RS1/16S103J
R 112	(B,20,106)	RS1/16S103J
R 113	(B,11,59)	RS1/16S222J
R 114	(B,13,59)	RS1/16S222J
R 117	(B,32,70)	RS1/16S562J
R 118	(B,23,106)	RS1/16S562J
R 119	(B,29,67)	RS1/16S222J
R 120	(B,20,104)	RS1/16S222J
R 123	(B,7,82)	RS1/16S222J
R 124	(B,13,82)	RS1/16S222J
R 125	(B,8,85)	RS1/16S131J
R 126	(B,11,84)	RS1/16S131J
R 129	(B,267,71)	RS1/16S101J
R 130	(B,280,71)	RS1/16S101J
R 131	(B,271,70)	RS1/16S182J
R 132	(B,284,70)	RS1/16S182J
R 133	(B,263,91)	RS1/16S222J
R 134	(B,261,103)	RS1/16S222J
R 135	(B,261,82)	RS1/16S331J
R 136	(B,273,82)	RS1/16S331J
R 137	(B,266,84)	RS1/16S273J
R 138	(B,278,86)	RS1/16S273J
R 141	(B,265,72)	RS1/16S222J
R 142	(B,278,72)	RS1/16S222J
R 201	(B,256,62)	RS1/16S472J
R 202	(B,273,60)	RS1/16S472J
R 203	(B,151,48)	RS1/16S102J
R 204	(B,154,47)	RS1/16S103J
R 205	(B,154,51)	RS1/16S224J
R 207	(B,267,60)	RS1/16S472J
R 301	(B,266,91)	RS1/16S222J
R 302	(B,265,107)	RS1/16S222J
R 303	(B,267,88)	RS1/16S112J
R 304	(B,265,108)	RS1/16S112J
R 305	(B,239,56)	RS1/16S222J
R 306	(B,241,64)	RS1/16S222J
R 307	(B,235,71)	RS1/16S683J
R 308	(B,237,71)	RS1/16S332J
R 309	(B,231,70)	RS1/16S332J
R 310	(B,230,70)	RS1/16S683J
R 311	(B,248,73)	RS1/16S473J
R 312	(B,248,76)	RS1/16S473J
R 313	(B,230,74)	RS1/16S102J
R 314	(B,252,96)	RS1/16S102J
R 315	(B,166,35)	RS1/16S183J
R 316	(B,209,40)	RS1/16S183J
R 317	(B,217,83)	RS1/16S822J
R 318	(B,248,101)	RS1/16S822J
R 319	(B,208,119)	RS1/16S223J
R 320	(B,211,119)	RS1/16S223J
R 321	(B,216,89)	RS1/16S102J
R 322	(B,241,103)	RS1/16S102J
R 323	(B,224,93)	RS1/16S681J
R 324	(B,231,99)	RS1/16S682J
R 326	(B,227,98)	RS1/16S105J
R 327	(B,228,93)	RS1/16S105J
R 328	(B,234,99)	RS1/16S681J
R 329	(B,188,130)	RS1/16S472J
R 330	(B,217,129)	RS1/16S472J
R 331	(B,208,125)	RS1/16S103J

Circuit Symbol and No.		Part No.	Circuit Symbol and No.		Part No.
R 332	(B,235,125)	RS1/16S103J	R 614	(B,101,31)	RS1/16S223J
R 337	(B,199,139)	RS1/16S103J	R 615	(B,104,31)	RS1/16S223J
R 338	(B,227,138)	RS1/16S103J	R 616	(A,128,36)	RD1/4PU472J
R 341	(A,169,124)	RS2LMF220J	R 617	(A,135,49)	RD1/4PU101J
R 342	(A,250,124)	RS2LMF220J	R 618	(A,144,49)	RD1/4PU271J
R 343	(A,159,130)	RD1/4PU100J	R 619	(A,139,46)	RD1/4PU271J
R 344	(A,265,128)	RD1/4PU100J	R 620	(B,122,38)	RS1/16S222J
R 345	(B,223,94)	RS1/16S103J	R 621	(B,108,32)	RS1/16S103J
R 346	(B,229,102)	RS1/16S103J	R 622	(B,105,50)	RS1/16S202J
R 347	(A,163,124)	RS2LMF220J	R 623	(B,115,55)	RS1/16S101J
R 348	(A,256,124)	RS2LMF220J	R 624	(B,95,57)	RS1/16S105J
R 349	(B,143,26)	RS1/16S333J	R 625	(B,101,52)	RS1/16S153J
R 350	(B,178,31)	RS1/16S333J	R 626	(B,110,53)	RS1/16S102J
R 351	(B,221,73)	RS1/16S182J	R 627	(B,102,48)	RS1/16S473J
R 352	(B,247,95)	RS1/16S182J	R 629	(B,109,46)	RS1/16S223J
R 353	(B,227,78)	RS1/16S473J	R 631	(A,98,90)	RS1/2PMF100J
R 354	(B,246,93)	RS1/16S473J	R 632	(A,95,72)	RS1/2PMF100J
R 355	(B,223,82)	RS1/16S182J	R 648	(B,239,10)	RS1/16S683J
R 356	(B,246,99)	RS1/16S182J	R 650	(B,115,70)	RS1/16S683J
R 357	(B,223,78)	RS1/16S182J	R 651	(B,104,67)	RS1/16S472J
R 358	(B,246,97)	RS1/16S182J	R 652	(B,107,67)	RS1/16S472J
R 359	(B,225,82)	RS1/16S182J	R 653	(B,97,64)	RS1/16S332J
R 360	(B,243,96)	RS1/16S182J	R 654	(B,100,66)	RS1/16S332J
R 361	(B,226,85)	RS1/16S182J	R 655	(B,88,40)	RS1/16S272J
R 362	(B,241,98)	RS1/16S182J	R 656	(B,90,40)	RS1/16S272J
R 363	(B,226,88)	RS1/16S473J	R 657	(B,96,38)	RS1/16S272J
R 364	(B,239,98)	RS1/16S473J	R 658	(B,120,68)	RS1/16S222J
R 365	(B,222,85)	RS1/16S102J	R 659	(B,111,65)	RS1/16S183J
R 366	(B,240,102)	RS1/16S102J	R 660	(A,21,58)	RS1/2PMF121J
R 385	(B,141,18)	RS1/16S333J	R 661	(A,21,45)	RS1/2PMF121J
R 386	(B,183,23)	RS1/16S333J	R 662	(A,21,36)	RS1/2PMF121J
R 388	(B,201,73)	RS1/16S102J	R 663	(B,103,88)	RS1/16S472J
R 389	(B,186,76)	RS1/16S102J	R 664	(B,106,88)	RS1/16S472J
R 501	(B,230,36)	RS1/16S472J	R 665	(A,21,118)	RS1/2PMF121J
R 502	(B,220,18)	RS1/16S102J	R 666	(A,21,112)	RS1/2PMF121J
R 503	(B,231,36)	RS1/16S102J	R 667	(A,21,99)	RS1/2PMF121J
R 504	(B,225,41)	RS1/16S473J	R 668	(A,31,51)	RS1/2PMF100J
R 505	(B,225,31)	RS1/16S473J	R 669	(A,24,68)	RS1/2PMF100J
R 506	(B,228,36)	RS1/16S473J	R 670	(A,65,108)	RS1/2PMF220J
R 507	(B,222,43)	RS1/16S104J	R 671	(A,85,91)	RS1/2PMF220J
R 508	(B,220,43)	RS1/16S122J	R 672	(A,45,118)	RS1/2PMF220J
R 509	(B,219,43)	RS1/16S471J	R 675	(A,101,152)	RS1/2PMF100J
R 510	(B,217,43)	RS1/16S101J	R 676	(A,70,152)	RS1/2PMF100J
R 511	(B,222,29)	RS1/16S104J	R 677	(A,109,146)	RD1/4PU392J
R 512	(B,220,29)	RS1/16S122J	R 678	(A,83,152)	RD1/4PU392J
R 513	(B,219,29)	RS1/16S471J	R 679	(B,102,68)	RS1/16S472J
R 514	(B,217,29)	RS1/16S101J	R 680	(B,118,68)	RS1/16S394J
R 601	(A,119,11)	RD1/4PU222J	R 681	(A,111,145)	RD1/4PU332J
R 602	(B,123,7)	RS1/16S473J	R 682	(A,148,141)	RD1/4PU2R2J
R 603	(B,123,11)	RS1/16S103J	R 683	(A,148,145)	RD1/4PU2R2J
R 604	(B,123,14)	RS1/16S103J	R 684	(B,100,155)	RS1/16S394J
R 605	(B,123,22)	RS1/16S222J	R 686	(A,135,145)	RS1/2PMF220J
R 606	(B,117,20)	RS1/16S472J	R 801	(A,247,41)	RD1/4PU683J
R 607	(B,110,24)	RS1/16S512J	R 802	(A,257,41)	RD1/4PU683J
R 608	(B,89,25)	RS1/16S512J	R 803	(B,252,32)	RS1/16S471J
R 609	(B,104,23)	RS1/16S103J	R 804	(B,271,36)	RS1/16S471J
R 610	(B,109,30)	RS1/16S472J	R 805	(B,262,34)	RS1/16S223J
R 611	(B,115,40)	RS1/16S221J	R 806	(B,278,37)	RS1/16S223J
R 612	(B,115,37)	RS1/16S102J	R 807	(B,267,29) 10 kΩ	CCN1152
R 613	(B,99,31)	RS1/16S223J	R 808	(B,285,33) 10 kΩ	CCN1152

Circuit Symbol and No.			Part No.
R 809	(B,266,22)	10 kΩ	CCN1152
R 810	(B,283,26)	10 kΩ	CCN1152
R 811	(B,266,26)	10 kΩ	CCN1152
R 812	(B,284,29)	10 kΩ	CCN1152
R 813	(B,261,21)	10 kΩ	CCN1152
R 814	(B,279,24)	10 kΩ	CCN1152
R 821	(B,256,20)		RS1/16S471J
R 822	(B,280,22)		RS1/16S471J
R 901	(B,135,41)		RS1/16S472J
R 902	(B,134,29)		RS1/16S104J
R 903	(B,136,29)		RS1/16S472J
R 904	(B,138,29)		RS1/16S223J

CAPACITORS

C 101	(B,27,87)		CCSRCH470J50
C 102	(B,18,121)		CCSRCH470J50
C 103	(A,21,77)		CFTNA154J50
C 104	(A,23,102)		CFTNA154J50
C 105	(A,20,60)		CFTNA154J50
C 106	(A,23,85)		CFTNA154J50
C 107	(A,262,67)		CEANP4R7M50
C 108	(A,275,67)		CEANP4R7M50
C 109	(A,270,72)		CFTNA823J50
C 110	(A,282,72)		CFTNA823J50
C 111	(A,262,79)		CFTNA224J50
C 112	(A,274,79)		CFTNA224J50
C 113	(B,262,69)		CCSRCH101J50
C 114	(B,274,69)		CCSRCH101J50
C 151	(B,24,76)		CKSRYB103K50
C 152	(B,15,115)		CKSRYB103K50
C 153	(B,31,85)		CKSRYB103K50
C 154	(B,23,121)		CKSRYB103K50
C 155	(B,16,69)		CKSRYB103K50
C 156	(B,19,93)		CKSRYB103K50
C 157	(B,23,69)		CKSRYB103K50
C 158	(B,27,93)		CKSRYB103K50
C 159	(B,263,76)		CKSRYB103K50
C 160	(B,275,76)		CKSRYB103K50
C 161	(B,270,84)		CKSRYB103K50
C 162	(B,280,86)		CKSRYB103K50
C 165	(A,31,128)		CEAT100M50
C 166	(A,22,143)		CEAT100M50
C 202	(B,151,55)		CKSRYB104K16
C 204	(B,267,62)		CKSRYB473K50
C 301	(B,267,93)		CCSRCH101J50
C 302	(B,265,105)		CCSRCH101J50
C 303	(A,222,60)	10 µF/35 V	CCH1705
C 304	(A,231,60)	10 µF/35 V	CCH1705
C 305	(A,218,77)		CEAT4R7M50
C 306	(A,210,81)		CEAT4R7M50
C 307	(B,243,71)		CCSRCH222J50
C 308	(B,248,79)		CCSRCH222J50
C 309	(B,241,72)		CKSQYB474K25
C 310	(B,250,84)		CKSQYB474K25
C 311	(B,211,76)		CKSRYB104K50
C 312	(B,206,82)		CKSRYB104K50
C 313	(A,197,146)	47 µF/50 V	ACH1411
C 314	(A,248,146)	47 µF/50 V	ACH1411
C 315	(B,207,152)		CKSQYF105Z50

Circuit Symbol and No.			Part No.
C 316	(B,250,143)		CKSQYF105Z50
C 317	(B,207,150)		CKSQYF105Z50
C 318	(B,252,143)		CKSQYF105Z50
C 319	(B,238,71)		CKSRYB222K50
C 320	(B,233,71)		CKSRYB222K50
C 321	(B,227,76)		CCSRCH272J50
C 322	(B,250,96)		CCSRCH272J50
C 323	(B,222,88)		CCSRCH222J50
C 324	(B,238,98)		CCSRCH222J50
C 325	(B,218,80)		CCSRCH151J50
C 326	(B,247,104)		CCSRCH151J50
C 327	(B,216,80)		CCSRCH221J50
C 328	(B,249,104)		CCSRCH221J50
C 329	(B,226,93)		CKSRYB105K10
C 330	(B,229,98)		CKSRYB105K10
C 331	(B,233,99)		CKSRYB105K10
C 333	(B,203,133)		CKSQYB224K50
C 334	(B,233,133)		CKSQYB224K50
C 335	(A,189,141)		CEAT4R7M50
C 336	(A,231,146)		CEAT4R7M50
C 337	(A,163,132)		CQHA221J2A
C 338	(A,260,131)		CQHA221J2A
C 339	(A,176,124)		CFTNA334J50
C 340	(A,243,126)		CFTNA334J50
C 341	(A,176,118)		CFTNA684J50
C 342	(A,243,119)		CFTNA684J50
C 345	(B,160,16)		CCSQCH102J50
C 346	(B,198,17)		CCSQCH102J50
C 347	(B,160,18)		CKSQYB103K50
C 348	(B,198,15)		CKSQYB103K50
C 351	(A,181,110)		CFTNA684J50
C 352	(A,238,112)		CFTNA684J50
C 353	(A,182,141)	47 µF/50 V	ACH1411
C 354	(A,215,141)	47 µF/50 V	ACH1411
C 355	(B,176,143)		CKSQYF105Z50
C 356	(B,214,150)		CKSQYF105Z50
C 357	(B,179,143)		CKSQYF105Z50
C 358	(B,214,152)		CKSQYF105Z50
C 363	(B,261,91)		CKSRYB103K50
C 364	(B,269,105)		CKSRYB103K50
C 367	(B,168,11)		CKSQYB102K50
C 368	(B,206,6)		CKSQYB102K50
C 369	(B,168,13)		CKSQYB103K50
C 370	(B,206,9)		CKSQYB103K50
C 380	(A,239,146)	47 µF/50 V	ACH1411
C 381	(A,206,146)	47 µF/50 V	ACH1411
C 382	(A,224,141)	47 µF/50 V	ACH1411
C 383	(A,173,141)	47 µF/50 V	ACH1411
C 384	(B,241,143)		CKSQYF105Z50
C 385	(B,192,143)		CKSQYF105Z50
C 386	(B,226,143)		CKSQYF105Z50
C 387	(B,170,143)		CKSQYF105Z50
C 388	(B,244,143)		CKSQYF105Z50
C 389	(B,194,143)		CKSQYF105Z50
C 390	(B,229,143)		CKSQYF105Z50
C 391	(B,168,143)		CKSQYF105Z50
C 392	(A,261,144)		CEAT220M2A
C 393	(A,159,144)		CEAT220M2A
C 394	(A,255,141)		CFTNA104J2A
C 395	(A,166,141)		CFTNA104J2A

Circuit Symbol and No.		Part No.
C 501	(B,225,13)	CKSQYB102K50
C 502	(B,228,17)	CKSQYB102K50
C 503	(A,234,40)	CFTNA473J50
C 504	(A,220,24)	CFTNA473J50
C 505	(B,222,22)	CKSQYB102K50
C 601	(B,113,15)	CKSQYB102K50
C 602	(B,110,15)	CKSQYB103K50
C 603	(B,115,15)	CKSQYB104K50
C 604	(B,83,17)	CKSQYB102K50
C 605	(B,83,19)	CKSQYB103K50
C 606	(B,83,15)	CKSQYB104K50
C 608	(B,117,18)	CKSRYB103K50
C 609	(B,117,15)	CKSRYB103K50
C 610	(B,123,9)	CKSRYB103K50
C 611	(B,102,24)	CKSRYB103K50
C 612	(A,106,23)	CEAT100M50
C 613	(A,112,23)	CEAT100M50
C 614	(B,97,27)	CKSRYB103K50
C 615	(A,95,30)	CEAT101M16
C 616	(A,107,38)	CEAT220M25
C 617	(B,97,33)	CKSRYB103K50
C 618	(A,131,38)	CEAT471M16
C 619	(A,122,30)	CEAT220M25
C 620	(B,103,31)	CKSRYB103K50
C 621	(A,113,48)	CEAT100M50
C 622	(A,105,47)	CEAT221M16
C 624	(B,103,52)	CKSRYB102K50
C 625	(B,111,59)	CKSQYB474K16
C 626	(B,148,70)	CKSRYB104K50
C 627	(A,30,100) 22 µF/35 V	YCH5008
C 628	(A,25,107) 22 µF/35 V	YCH5008
C 629	(A,89,85) 22 µF/35 V	YCH5008
C 630	(A,94,77) 22 µF/35 V	YCH5008
C 631	(B,122,99)	CKSRYB104K50
C 632	(B,141,99)	CKSRYB104K50
C 633	(B,136,99)	CKSRYB104K50
C 634	(B,118,99)	CKSRYB104K50
C 635	(B,107,116)	CKSRYB104K50
C 636	(B,112,116)	CKSRYB104K50
C 637	(B,126,116)	CKSRYB104K50
C 638	(B,132,116)	CKSRYB104K50
C 639	(A,96,95) 47 µF/50 V	YCH5019(P35)
C 640	(A,154,112) 47 µF/50 V	YCH5019(P35)
C 641	(B,35,94)	CKSRYB104K50
C 642	(B,27,110)	CKSRYB104K50
C 650	(B,126,16)	CKSRYB105K10
C 651	(A,98,50)	CEAT101M16
C 652	(B,99,47)	CKSRYB103K50
C 653	(A,115,62)	CFTNA124J50
C 654	(B,113,65)	CKSRYB472K50
C 655	(A,25,54)	CQHA472J2A
C 656	(A,24,63)	CQHA472J2A
C 657	(A,66,26) 3 900 µF/16 V	YCH5003(P35)
C 658	(A,66,43) 3 900 µF/16 V	YCH5003(P35)
C 660	(A,60,111)	CQHA102J2A
C 661	(A,78,103)	CQHA103J2A
C 662	(A,51,111)	CQHA103J2A
C 663	(A,149,96) 2 700 µF/50 V	YCH5004(P35)
C 664	(A,130,96) 2 700 µF/50 V	YCH5004(P35)
C 665	(A,111,96) 2 700 µF/50 V	YCH5004(P35)
C 666	(A,140,112) 2 700 µF/50 V	YCH5004(P35)
C 667	(A,121,112) 2 700 µF/50 V	YCH5004(P35)
C 668	(A,102,112) 2 700 µF/50 V	YCH5004(P35)
C 669	(A,112,141) 47 µF/25 V	CCH1544
C 670	(A,83,140) 47 µF/25 V	CCH1544
C 671	(A,95,134) 1 500 µF/25 V	YCH5017(P35)
C 672	(A,81,129) 1 500 µF/25 V	YCH5017(P35)
C 673	(B,92,132)	CKSRYB473K50
C 674	(B,84,132)	CKSRYB473K50
C 681	(A,132,129) 10 µF/50 V	YCH5010
C 682	(B,117,130)	CKSRYB104K50
C 683	(A,97,145) 10 µF/50 V	YCH5010
C 684	(B,92,142)	CKSRYB104K50
C 685	(A,127,141)	CEAT470M25
C 686	(A,118,141)	CEAT470M16
C 687	(B,114,139)	CKSRYB473K50
C 688	(B,172,110)	CKSRYB104K16
C 689	(B,159,142)	CKSRYB104K16
C 690	(A,140,139)	CEAT220M50
C 691	(A,104,141) 22 µF/50 V	YCH5007
C 692	(A,76,140) 22 µF/50 V	YCH5007
C 695	(A,114,126) 10 µF/50 V	YCH5010
C 696	(A,90,145) 10 µF/50 V	YCH5010
C 801	(A,250,36)	CEAT100M50
C 802	(A,267,39)	CEAT100M50
C 803	(B,262,36)	CCSQCH471J50
C 804	(B,279,40)	CCSQCH471J50
C 805	(A,255,31) 10 µF/50 V	CCH1543
C 806	(A,274,34) 10 µF/50 V	CCH1543
C 807	(B,266,34)	CKSQYB223K50
C 808	(B,270,43)	CKSQYB223K50
C 809	(B,266,24)	CCSRCH470J50
C 810	(B,284,27)	CCSRCH470J50
C 811	(B,261,22)	CCSRCH470J50
C 812	(B,279,26)	CCSRCH470J50
C 813	(B,266,32)	CKSRYB103K50
C 814	(B,284,36)	CKSRYB103K50
C 815	(B,257,23)	CKSRYB103K50
C 816	(B,275,25)	CKSRYB103K50
C 821	(A,248,33)	CEAT100M50
C 822	(A,243,27)	CEAT100M50
C 831	(B,264,4)	CKSQYB102K50
C 832	(B,275,21)	CKSQYB102K50
C 833	(B,246,22)	CKSQYB102K50
C 834	(B,245,38)	CKSQYB102K50
C 835	(B,264,7)	CKSQYB103K50
C 836	(B,273,21)	CKSQYB103K50
C 837	(B,246,24)	CKSQYB103K50
C 838	(B,245,36)	CKSQYB103K50
C 901	(A,138,24)	CEANP471M16

C

Unit Number : CWM9848
Unit Name : Remote Control Unit

MISCELLANEOUS

Q 1351	Transistor	DTC114EUA
Q 1352	Transistor	DTC114EUA
D 1351	Diode	DAN202U
D 1352	Diode	DAN202U

Circuit Symbol and No.		Part No.
D 1366	Diode	UDZS16(B)
D 1367	Diode	UDZS16(B)
S 1351	Rotary Switch(BASS BOOST CONTROL)	CSD1128

RESISTORS

R 1351	RS1/16S103J
R 1352	RS1/16S102J
R 1353	RS1/16S103J
R 1354	RS1/16S102J
R 1359	RS1/16S102J