EXPLODED VIEW

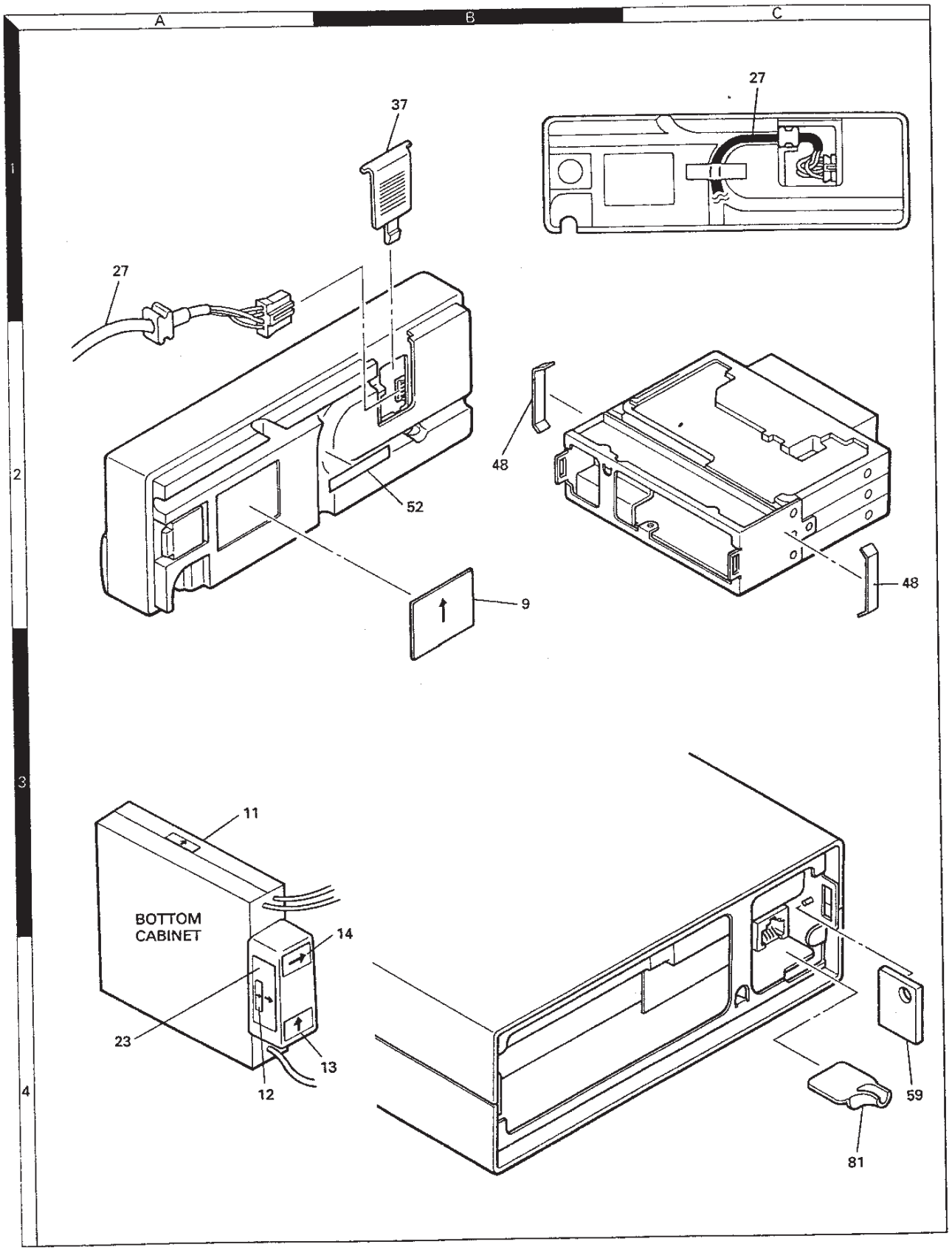

EXPLODED VIEW

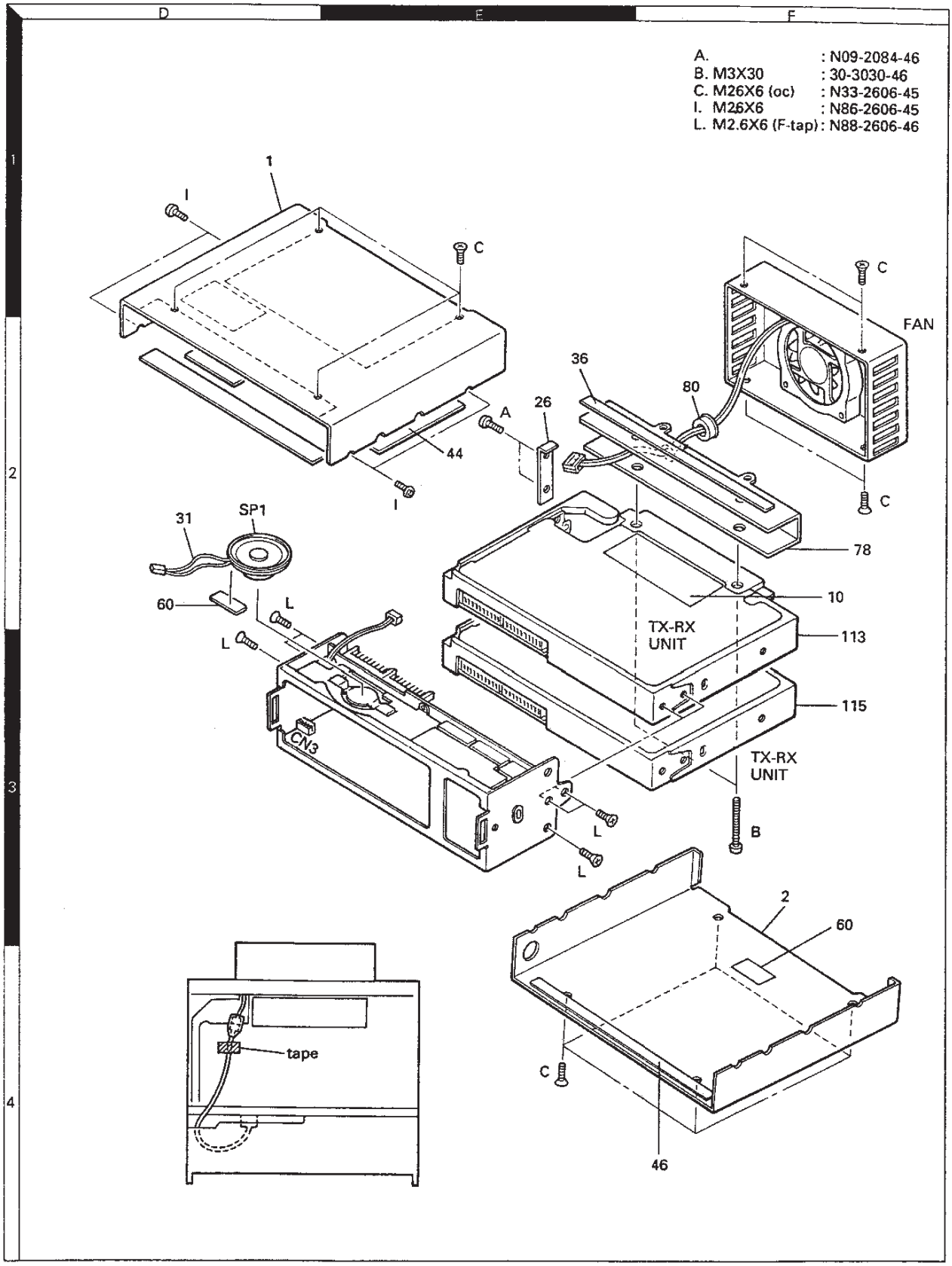

EXPLODED VIEW

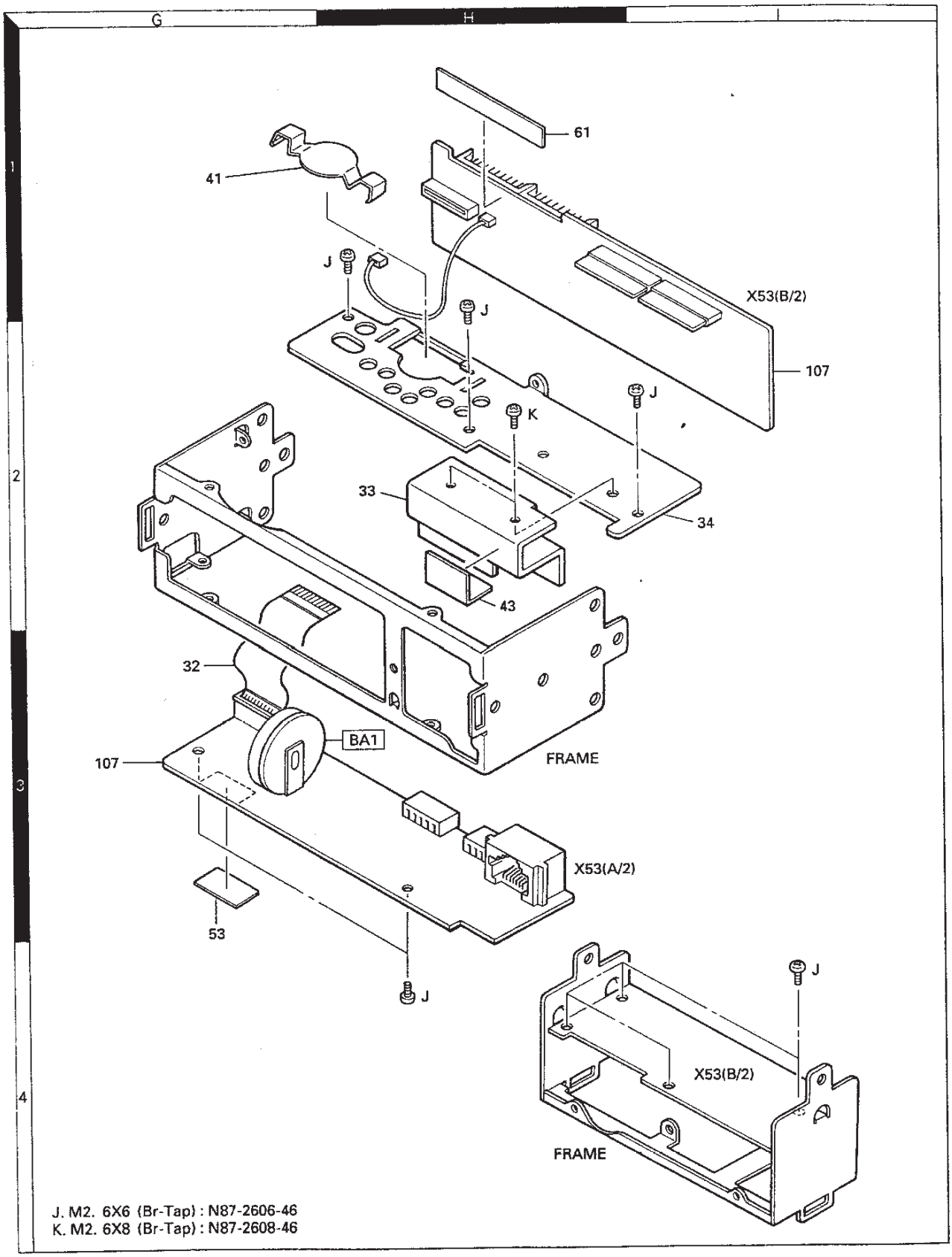

J. M2. 6X6 (Br-Tap) : N87-2606-46
K. M2. 6X8 (Br-Tap) : N87-2608-46

EXPLODED VIEW

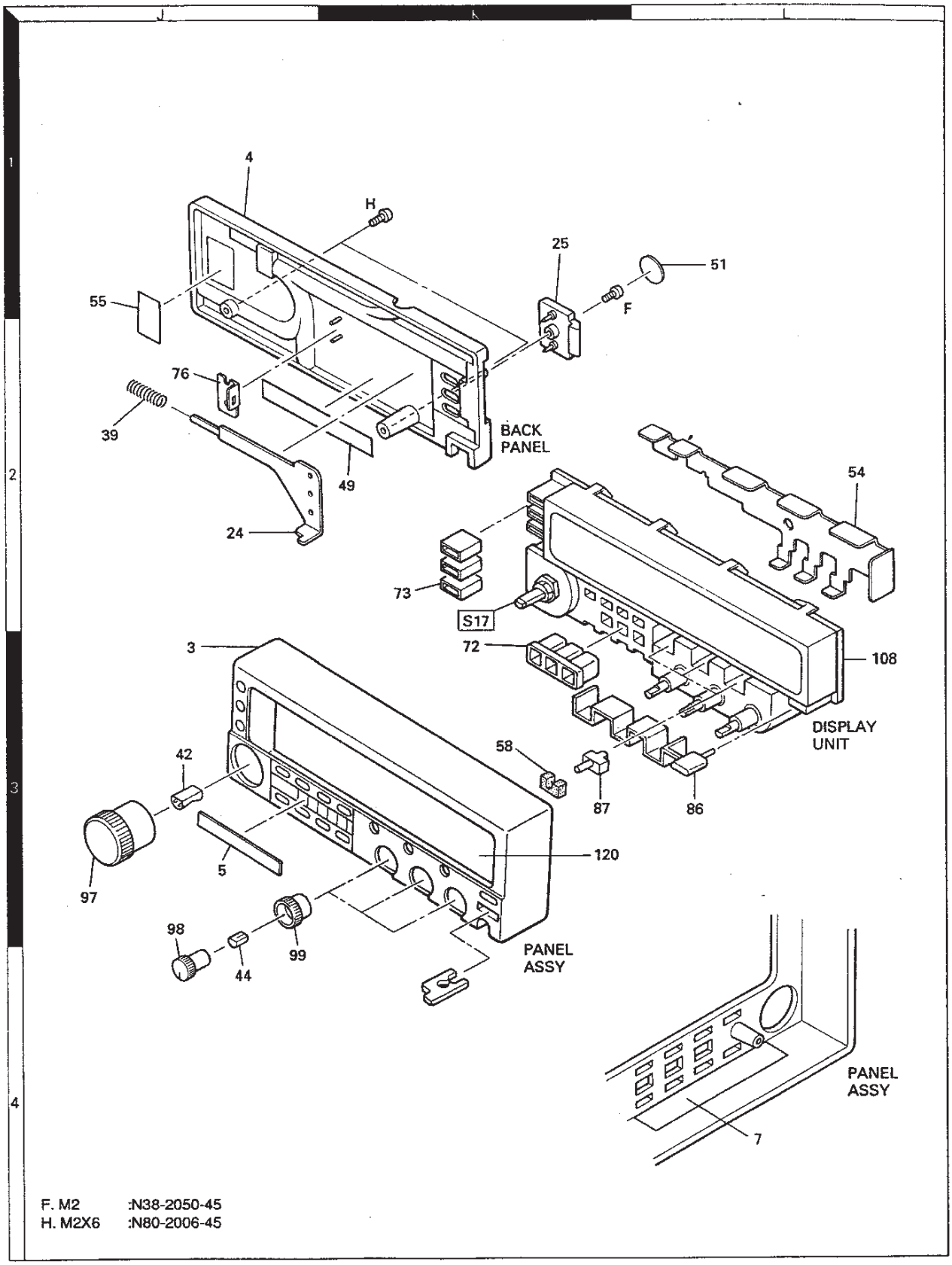

EXPLODED VIEW

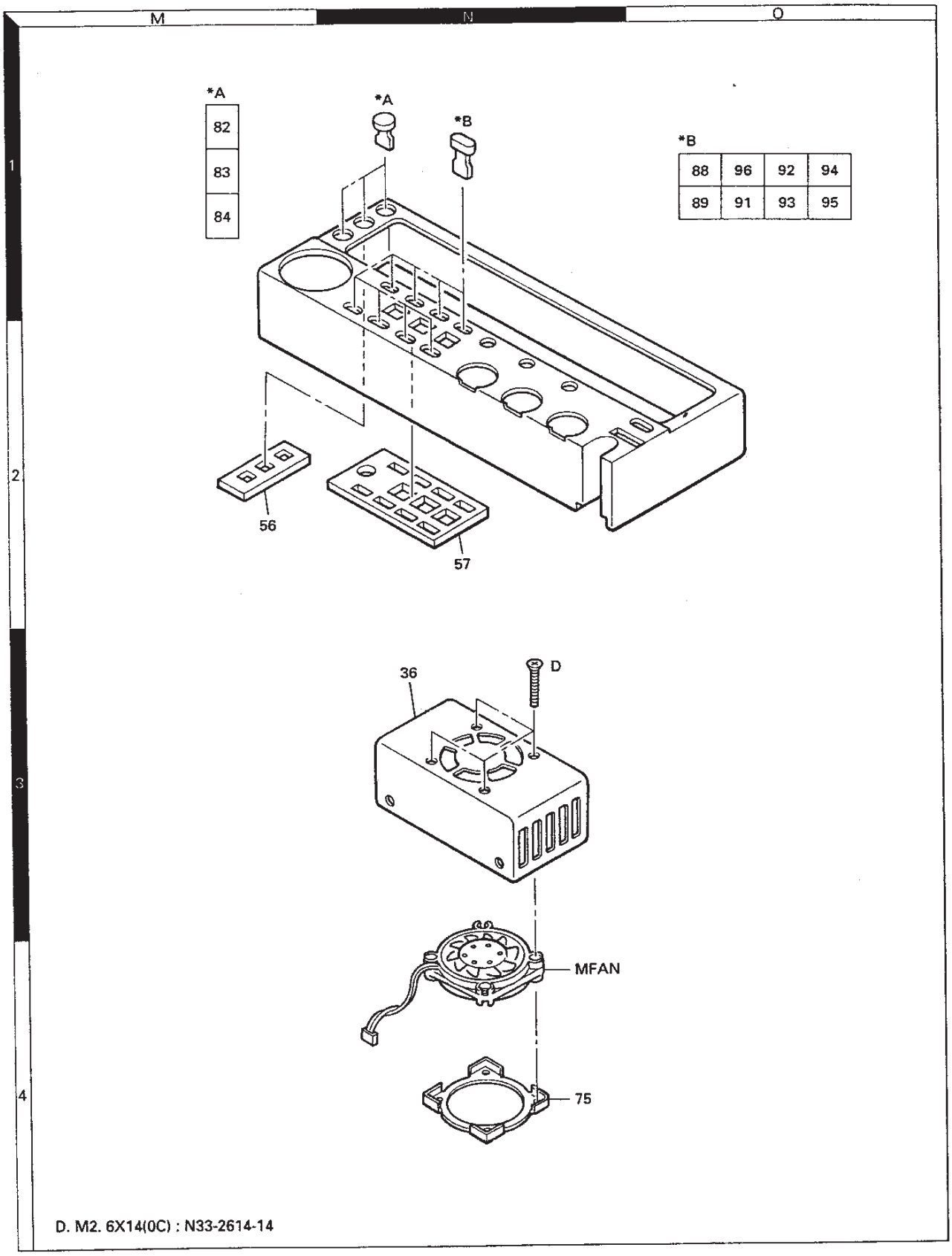

PACKING (MAIN UNIT)

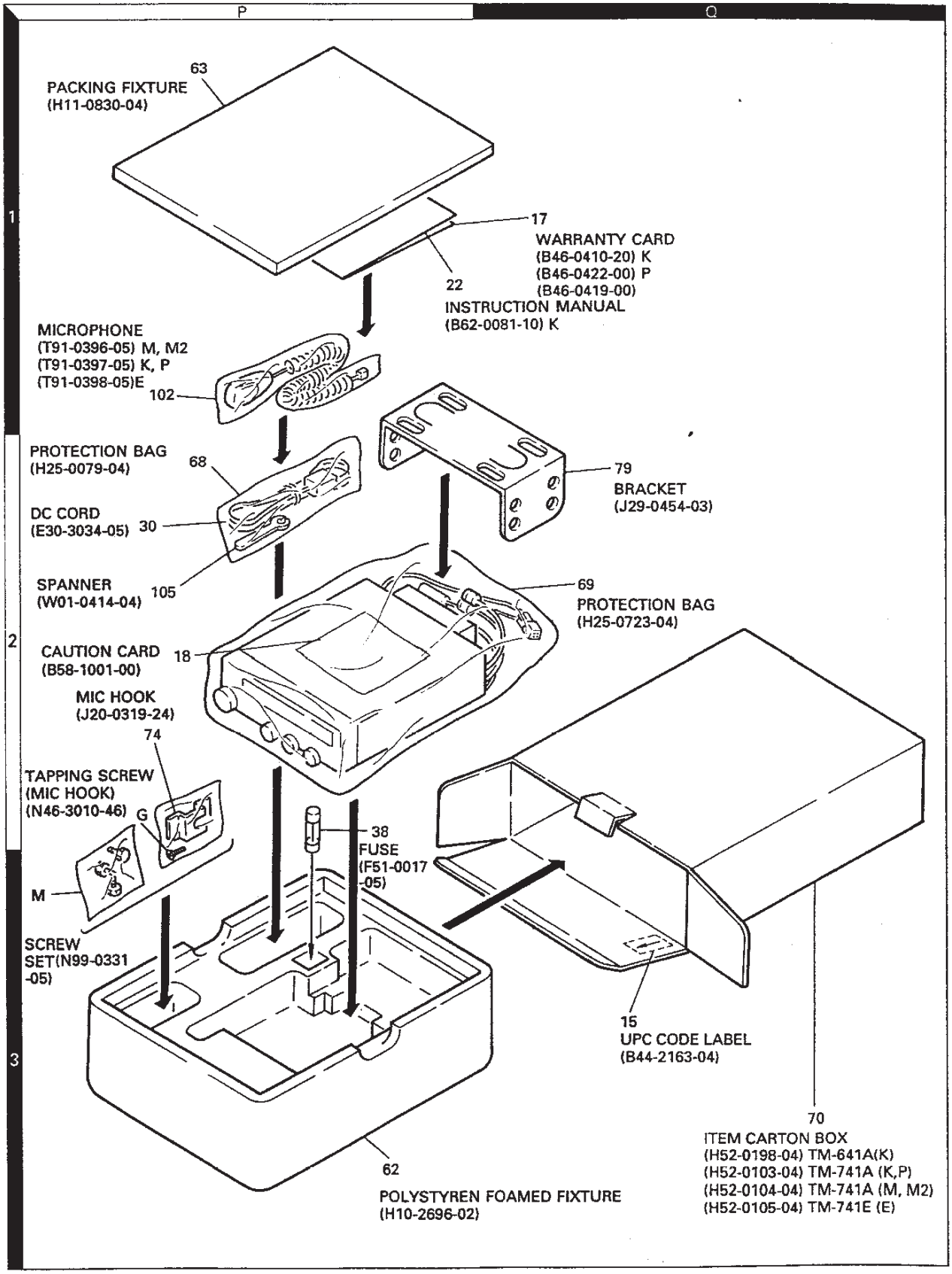

PACKING (MAIN UNIT)

R S

TM-741A

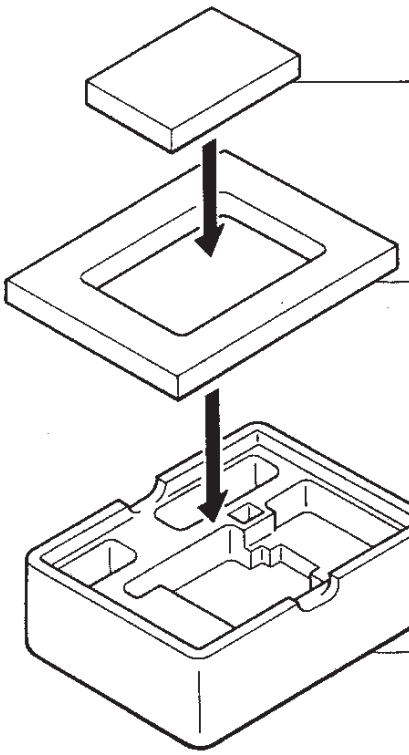

22
INSTRUCTION MANUAL
(B62-0083-00) P,M, M2

66
PROTECTION BOARD
(H13-0861-04) P,M, M2

62
POLYSTYRENE FORMED FIXTURE
(H10-2696-02)

1

2

TM-741E

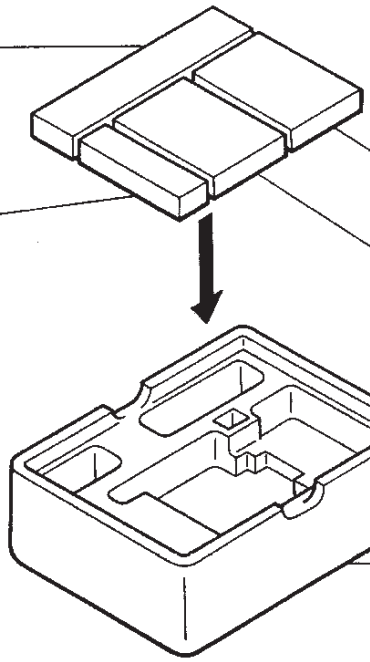

65
POLYSTYRENE PLATE
(H11-0857-14)E

64
POLYSTYRENE PLATE
(H11-0856-14)E

22
INSTRUCTION MANUAL
(B62-0084-00)E

22
INSTRUCTION MANUAL
(B62-0083-00)E

62
POLYSTYRENE FORMED FIXTURE
(H10-2696-02)

3

PARTS LIST

* New Parts
Parts without Parts No. are not supplied.
Les pièces non mentionnées dans le Parts No. ne sont pas fournis.
Teile ohne Parts No. werden nicht geliefert.

TM-641A

Ref. No. 参照番号	Address 位置	New Parts 新	Parts No. 部品番号	Description 部品名／規格	Destination 仕向	Remarks 備考
			TM-641A			
1	1D		AC1-2006-03	METALLIC CABINET(UPSIDE)		
2	3P		AC1-2048-03	METALLIC CABINET(BOTTOM)		
3	2J	*	A62-0128-03	PANEL ASSY		
4	1J		A82-0001-12	BACK PANEL		
5	3J		B03-0562-04	DRESSING PLATE		
7	4L		B11-1002-04	FILTER		
9	2B		B41-0679-04	CAUTION LABEL		
10	2F		B41-0686-04	CAUTION LABEL(ADJUST)		
11	3A,4A		B42-2455-04	LABEL		
12	3A,4A		B42-3343-04	LABEL(S/NO)		
13	4A		B42-3394-14	LABEL(FCC)		
14	3A,4A	*	B42-3498-04	LABEL(SP.ANT)		
15	3Q		B44-2163-04	UPC CODE LABEL(ITEM CARTON)		
-			B44-2165-04	UPC CODE LABEL(OUTER CARTON)		
17	1Q		B46-0410-30	WARRANTY CARD		
18	2P		B58-1001-03	CAUTION CARD		
21	1Q		B59-0441-00	SUB-INSTRUCTION MANUAL		
22	1P	*	B62-0082-10	INSTRUCTION MANUAL		
23	3A,4A	*	B72-0286-04	MODEL NAME PLATE(TM-641A)		
24	2J		B10-0607-04	LEVER		
25	1K		D32-0415-04	STOPPER		
26	2E		E23-0676-04	TERMINAL		
27	1C,2A		E30-3005-05	CONNECTING WIRE(COMMON-PANEL)		
-			E30-3006-08	CURL CORD		
30	2P		E30-3034-05	DC POWER CORD(ACSY)		
31	2D		E37-0006-05	CONNECTING WIRE(SPEAKER)		
32	3G		E37-0007-05	FLAT CABLE(COMMON)		
33	2H		F01-0977-13	HEAT SINK(COMMON AVR)		
34	2I		F01-0978-04	HEAT SINK		
-			F05-2036-05	FUSE(20A)		
36	3N		F07-1203-13	COVER(FAN)		
37	1B		F07-1204-04	COVER(PANEL)		
38	3P		F51-0017-05	FUSE(15A,ACSY)		
39	2J		G01-0854-04	COMPRESSION SPRING		
40	3J		G02-0505-05	LEAF SPRING		
41	1G		G02-0716-04	FLAT SPRING(SPEAKER)		
42	3J		G09-0405-05	SPRING(KNOB)		
43	2H		G10-0635-04	NON-WOVEN FABRIC(19X19)		
44	2E		G10-0663-04	NON-WOVEN FABRIC(100X85)		
46	2D,4F		G10-0684-04	NON-WOVEN FABRIC(130X10)		
48	2B,2C		G10-0700-04	NON-WOVEN FABRIC(60X10)		
49	2K		G10-0708-04	NON-WOVEN FABRIC(BACK PANEL)		
50	2E		G10-0709-04	NON-WOVEN FABRIC		
51	1L		G11-0651-04	SHEET		
52	2B		G11-0653-04	SHEET		
53	3G		G11-0658-04	SHEET(10X5)		
54	2L		G11-0664-03	SHEET		
55	1J		G13-0921-04	CUSHION(BACK PANEL)		
56	2M		G13-0967-04	CUSHION(VERTICAL 3 KEY)		
57	2N		G13-0968-04	CUSHION(8 KEY)		
58	3K		G13-0969-04	CUSHION(3 KEY)		

L:Scandinavia K:USA P:Canada
Y:PX(Far East, Hawaii) T:England E:Europe
Y:AAFES(Europe) X:Australia M:Other Areas

⚠ indicates safety critical components

PARTS LIST

* : New Parts
Parts without Parts No. are not supplied.
Les articles non mentionnés dans la Parts No. ne sont pas fournis.
Teile ohne Parts No. werden nicht geliefert.

TM-641A

Ref. No. 参照番号	Address 位置	New Parts 新	Parts No. 部品番号	Description 部品名／規格	Destination 仕向	Remarks 備考
59	4C		G13-1302-04	CUSHION		
60	2D,2F		G53-0508-04	NON-WOVEN FABRIC(30X10)		
61	1F		G53-0511-04	NON-WOVEN FABRIC(80MMSQ)		
62	3P		H10-2696-02	POLYSTYRENE FORMED FIXTURE		
63	1P		H11-3830-04	PACKING FIXTURE		
67	2P		H25-0029-04	PROTECTION BAG(MIC HOOK SCREW		
68	2P		H25-0079-04	PROTECTION BAG(200X300)		
69	2P		H25-0723-04	PROTECTION BAG(230X400)		
70	3G	*	H52-0198-04	ITEM CARTON BOX		
-		*	H62-0168-04	OUTER CARTON BOX		
72	2K		J19-1477-04	LED HOLDER		
73	2K		J19-1496-04	HOLDER(VFO,MR,MHZ)		
74	2P		J20-0319-24	MIC HOOK(ASSY)		
75	4N		J21-4308-14	MOUNTING HARDWARE(FAN)		
76	2J		J21-4309-14	MOUNTING HARDWARE(LEVER)		
78	2F		J21-4352-03	MOUNTING HARDWARE		
79	2D		J29-0454-03	WIRING BOARD		
80	2F		J42-0452-05	BUSHING		
81	4C		J42-0470-03	MIC CORD BUSHING		
82	1M		K27-3078-04	KNOB(BUTTON) VFO		
83	1M		K27-3079-04	KNOB(BUTTON) MR		
84	1M		K27-3080-04	KNOB(BUTTON) MHZ		
85	4K		K27-3092-04	KNOB(BUTTON) RELEASE		
86	3L		K27-3108-04	KNOB(BUTTON) POWER		
87	3K		K27-3109-04	KNOB(BUTTON) CONT-SEL		
88	1O		K27-3110-04	KNOB(BUTTON) CALL		
89	1O		K27-3111-04	KNOB(BUTTON) F		
91	1O		K27-3113-04	KNOB(BUTTON) TONE		
92	1O		K27-3114-04	KNOB(BUTTON) REV		
93	1O		K27-3115-04	KNOB(BUTTON) DISS		
94	1O		K27-3116-04	KNOB(BUTTON) LOW		
95	1O		K27-3117-04	KNOB(BUTTON) MUTE		
96	1O		K27-3118-04	KNOB(BUTTON) SHIFT		
97	3J		K29-3156-04	KNOB		
98	3J		K29-4575-04	KNOB VOL		
99	3J		K29-4576-04	KNOB SQL		
-			L15-0310-25	LOW-FREQUENCY CHOKE COIL		
A	2S		N09-2084-05	SCREW(-)		
B	3B		N30-3030-46	PAN HEAD MACHINE SCREW(UNIT		
C	1B,2F		N33-2606-45	OVAL HEAD MACHINE SCREW(CABE		
D	3N		N33-2614-45	OVAL HEAD MACHINE SCREW(FAN		
F	1L		N38-2050-45	SCREW(RELEASE)		
G	2P		N46-3010-46	PAN HEAD TAPPING SCREW(MIC HOO		
H	1K		N80-2006-46	PAN HEAD TAPTITE SCREW(PANEL)		
I	1D,2B		N86-2606-46	SCREW		
J	1H,4H		N87-2606-46	BRAZIER HEAD TAPTITE SCREW		
K	2H		N87-2608-46	BRAZIER HEAD TAPTITE SCREW		
L	2D,3E		N88-2606-46	FLAT HEAD TAPTITE SCREW(UNIT)		
M	3P		N99-0331-05	SCREW SET(ASSY)		
-			R014DB3A220J	RESISTOR 22 J 1W		
SP1	2D		T07-0268-05	SPEAKER		
MFAN	4N		T42-0310-05	FAN MOTOR		

L:Scandinavia K:USA P:Canada
X:PX(Far East, Hawaii) T:England E:Europe
Y:AAFES(Europe) X:Australia M:Other Areas

⚠ indicates safety critical components.

PARTS LIST

* New Parts
Parts without Parts No. are not supplied
Items marked with asterisks are new Parts No. received after publication.
Telephone Parts No. were not given for part

TM-641A
TM-741A/E

Ref. No. 参照番号	Address 位置	New Parts 新	Parts No. 部品番号	Description 部品名／規格	Destination 仕向	Remarks 備考
102	1P		T91-0397-05	MICROPHONE		
105	2P		WG1-0414-04	SPANNER(ACSY)		
107	2J,3G		XS3-3310-12	CONTROL UNIT		
108	2L		XS4-3120-11	DISPLAY UNIT		
113	2F		XS7-3580-12	TX-RX UNIT(144M 50W)		
115	3F		XS7-3810-10	TX-RX UNIT(220M 25W)		
120	3K		A90-0160-05	PROTECTION SHEET(FRONT GLASS)		
			TM-741A/E			
1	1D		A01-2006-03	METALLIC CABINET(UPSIDE)		
2	3F	*	A01-2048-03	METALLIC CABINET(BOTTOM)		
3	2J	*	A62-0086-03	PANEL ASSY(TM-741A)	KPMM2	
3	2J	*	A62-0087-03	PANEL ASSY(TM-741E)	E	
4	1J		A82-0001-12	BACK PANEL		
6	3J		B03-0562-04	DRESSING PLATE		
7	4L		B11-1002-04	FILTER		
9	2B		B41-0679-04	CAUTION LABEL		
10	2F		B41-0686-04	CAUTION LABEL		
11	3A,4A		B42-2455-04	LABEL		
12	3A,4A		B42-3343-04	LABEL(S/NO)		
13	4A		B42-3394-04	LABEL(FCC)	KP	
14	3A,4A	*	B42-3484-04	LABEL(SP,ANT)	KP	
14	3A,4A	*	B42-3485-04	LABEL(SP,ANT)	EMM2	
15	3Q		B44-2163-04	UPC CODE LABEL(ITEM CARTON)		
-			B44-2165-04	UPC CODE LABEL(OUTER CARTON)		
17	1Q		S46-0410-30	WARRANTY CARD	K	
17	1Q		B46-0419-00	WARRANTY CARD	E	
17	1Q		S46-0422-00	WARRANTY CARD	P	
18	2P		B58-1001-00	CAUTION CARD		
21	1Q	*	B59-0441-00	SUB-INSTRUCTION MANUAL		
22	1P	*	B62-0082-10	INSTRUCTION MANUAL	K	
22	1E,3E	*	B62-0083-00	INSTRUCTION MANUAL	PEMM2	
22	3E	*	B62-0084-00	INSTRUCTION MANUAL	E	
23	3A,4A	*	B72-0166-04	MODEL NAME PLATE(TM-741A)	KP	
23	3A,4A	*	B72-0167-04	MODEL NAME PLATE(TM-741A)	MM2	
23	3A,4A	*	B72-0168-04	MODEL NAME PLATE(TM-741E)	E	
24	2J		D10-0607-04	LEVER		
25	1K		D32-0415-04	STOPPER		
26	2E		E23-0676-04	TERMINAL		
27	1C,2A		E30-3005-05	CONNECTING WIRE(COMMON-PANEL)		
-			E30-3006-08	CURL CORD		
30	2P		E30-3034-05	DC CORD		
31	2D		E37-0006-05	CONNECTING WIRE(SPEAKER)		
32	3G		E37-0007-05	FLAT CABLE(COMMON)		
33	2H	*	F01-0977-13	HEAT SINK(COMMON AVR)		
34	2I		F01-0978-04	HEAT SINK		
-			F05-2036-05	FUSE(20A)		
36	3K	*	F07-1203-13	COVER(FAN)		
37	1B		F07-1204-04	COVER(PANEL)		
38	3P	*	F51-0017-09	FUSE(15A,ACSY)		
39	2I		G01-0852-04	COMPRESSION SPRING		

L:Scandinavia K:USA P:Canada
M:PX(Far East, Hawaii) T:England E:Europe
Y:AAFES(Europe) X:Australia M:Other Areas

⚠ indicates safety critical components

PARTS LIST

* New Parts.
Parts without Parts No. are not supplied.
Items are common mechanisms due to Parts No. no 80's are 6th figures.
Items other Parts No. written with pencil are ∗.

TM-741A/E

Ref. No. 番照番号	Address 位置	New Parts 新	Parts No. 部品番号	Description 部品名／規格	Destination 仕向	Remarks 備考
40	3J		G02-0525-05	LEAF SPRING		
41	1G	*	G02-0716-04	FLAT SPRING(SPEAKER)		
42	3J		G09-0495-05	SPRING(KNOB)		
43	2H		G10-0636-04	NON-WOVEN FABRIC(19X19)		
44	2E		G10-0663-04	NON-WOVEN FABRIC(100X80)		
46	2D,4P		G10-0684-04	NON-WOVEN FABRIC(13CX10)		
-			G10-0694-04	NON-WOVEN FABRIC		
48	3B,2C		G10-0700-04	NON-WOVEN FABRIC(60X10)		
49	2K		G10-0708-04	NON-WOVEN FABRIC(BACK PANEL)		
50	2E		G10-0709-04	NON-WOVEN FABRIC		
51	1L		G11-0651-04	SHEET		
52	3B		G11-0653-04	SHEET		
53	3C		G11-0658-04	SHEET(10X5)		
54	2L		G11-0664-03	SHEET		
55	1J		G13-0921-04	CUSHION(BACK PANEL)		
56	2M		G13-0967-04	CUSHION(3 KEY)		
57	2N		G13-0968-04	CUSHION(8 KEY)		
58	3K		G13-0969-04	CUSHION(3 KEY)		
59	3C		G13-1302-04	CUSHION		
60	2D,3F		G33-0508-04	NON-WEVEN FABRIC(30X10)		
61	1H		G53-0511-04	NON-WEVEN FABRIC(COMMON)		
62	3P,2S		H10-2696-02	POLYSTYRENE FORMED FIXTURE		
63	1P		H11-0830-04	PACKING FIXTURE	K	
64	3R	*	H11-0856-14	POLYSTYREN PLATE	E	
65	2R	*	H11-0857-14	POLYSTYREN PLATE	E	
66	1S	*	H13-0561-04	PROTECTION BOARD	PMM2	
67	2P		H25-0029-04	PROTECTION BAG	KP	
68	2P		H25-0079-04	PROTECTION BAG(200X200)		
69	2Q		H25-0725-04	PROTECTION BAG(230X400)		
70	3Q	*	H52-0103-04	ITEM CARTON BOX(TM-741A,440M)	KP	
70	3Q	*	H52-0104-04	ITEM CARTON BOX(TM-741A,430M)	MM2	
70	3Q	*	H52-0105-04	ITEM CARTON BOX(TM741E)	E	
-		*	H62-0093-04	OUTER CARTON BOX(TM-741A)	KPMM2	
-		*	H62-0094-04	OUTER CARTON BOX(TM-741E)	E	
72	2K		J19-1477-04	LED HOLDER		
73	2K		J19-1496-04	HOLDER(VFO,MR,MHZ)		
74	2P		J20-0319-24	MIC FOOK(ACSY)	KP	
75	4N	*	J21-4309-14	MOUNTING HARDWARE(FAN)		
76	2T		J21-4309-14	MOUNTING HARDWARE(LEVER)		
78	2F		J21-4352-03	MOUNTING HARDWARE		
79	2Q		J29-0454-03	WIRING BOARD		
80	2F		J42-0452-05	BUSHING		
81	4C		J42-0470-03	MIC CORD BUSHING		
82	1M		K27-3078-04	KNOB(BUTTON) VFO		
83	1M		K27-3079-04	KNOB(BUTTON) MR		
84	1M		K27-3080-04	KNOB(BUTTON) MHZ		
85	4K		K27-3092-04	KNOB(BUTTON) RELEASE		
86	3L		K27-3108-04	KNOB(BUTTON) POWER		
87	3K		K27-3109-04	KNOB(BUTTON)		
88	1O		K27-3110-04	KNOB(BUTTON) CALL		
89	1O		K27-3111-04	KNOB(BUTTON) F		
90	1O		K27-3112-04	KNOB(BUTTON) BELL		
91	1O		K27-3113-04	KNOB(BUTTON) TONE		

L:Switchiey s K:USA P:Canada
Y:PX(Far East, Hawaii) T:England E:Europe
Y:AAFES(Europe) X:Australia M:Other Areas

⚠ indicates safety critical components.

PARTS LIST

* New Parts
Parts without Parts No. are not supplied.
Les articles non mentionnés dans la Parts No. ne sont pas fournis.
Telle ohne Parts No. werden nicht geliefert.

TM-741A/E
UT-28S

Ref. No. 参照番号	Address 位置	New Parts 新	Parts No. 部品番号	Description 部品名／規格	Destination 仕向	Remarks 備考
92	1Q		K27-3114-04	KNOB(BUTTON) REV		
93	1Q		K27-3115-04	KNOB(BUTTON) DISS		
94	1Q		K27-3116-04	KNOB(BUTTON) LOW		
95	1Q		K27-3117-04	KNOB(BUTTON) MUTE		
96	1Q	*	K27-3118-04	KNOB(BUTTON) SHIFT		
97	3J		K29-3156-04	KNOB		
98	3J		K29-4575-04	KNOB VOL		
99	3J		K29-4576-04	KNOB SQL		
-			L15-0310-25	LOW-FREQUENCY CHOKE COIL		
A	2E		N09-2084-05	SCREW		
B	3B		N30-3030-46	PAN HEAD MACHINE SCREW(UNIT		
C	1E,2F		N33-2606-45	OVAL HEAD MACHINE SCREW(CABE		
D	3N		N33-2614-45	OVAL HEAD MACHINE SCREW(PAN		
F	1L	*	N38-2050-45	SCREW(RELEASE)		
G	2P		N46-3010-46	PAN HEAD TAPPING SCREW(MIC HOO		
H	1K		N80-2006-45	PAN HEAD TAPTITE SCREW(PANEL)		
I	1D,2E		N86-2606-45	SCREW		
J	1F,4H		N87-2606-46	BRAZIER HEAD TAPTITE SCREW		
K	2H		N87-2608-46	BRAZIER HEAD TAPTITE SCREW		
L	2D,3E		N88-2606-46	FLAT HEAD TAPTITE SCREW(UNIT)		
M	3P		N99-0331-05	SCREW SET(ACSY)		
-			RD14DB3A220J	REGISTOR 22 J 1W		
SP1	2D		T07-0268-05	SPEAKER		
MFAN	4N		T42-0310-05	FAN MOTOR		
102	1P		T91-0396-05	MICROPHONE	MM2	
102	1P		T91-0397-05	MICROPHONE	KP	
102	1P		T91-0398-05	MICROPHONE	E	
105	2P		W01-0414-04	SPANNER(ACSY)		
107	2I,3G	*	X53-3310-12	CONTROL UNIT	KPMM2	
107	2I,3G	*	X53-3312-71	CONTROL UNIT	E	
108	2W	*	X54-3120-11	DISPLAY UNIT	KP	
108	2W	*	X54-3120-21	DISPLAY UNIT	M	
108	2W	*	X54-3120-22	DISPLAY UNIT	M2	
108	2W	*	X54-3122-71	DISPLAY UNIT	E	
113	2F	*	X57-3580-12	TX-RX UNIT(144M 50W)		
115	3F	*	X57-3590-12	TX-RX UNIT(440M 35W)	KP	
115	3F	*	X57-3590-22	TX-RX UNIT(430M 35W)	MM2	
115	3F	*	X57-3592-72	TX-RX UNIT(430M 35W)	E	
			UT-28S			
300	1U		B41-0686-04	CAUTION LABEL(ADJUST)		
303	1T		B42-2437-04	LABEL(S/NO,UNIT)		
305	1T		B42-2454-04	LABEL(S/NO,ITEM CARTON BOX)		
309	2U		B42-3488-04	LABEL(FREQUENCY)		
311	1T		B62-0089-10	INSTRUCTION MANUAL		
313	2U		S23-0657-04	TERMINAL		
315	1U		G11-0665-04	SHEET(PAN CABLE)		
317	2T,1U		H10-2726-03	POLYSTYRENE FOAMED FIXTURE		
320	1T		H13-0855-04	PROTECTION BOARD		
322	2U		H25-0029-04	PROTECTION BAG(60X110)		
324	1T,1U		H25-0760-04	PROTECTION BAG(200X350)		
326	2T	*	H52-0130-04	ITEM CARTON BOX		

L:Scandinavia K:USA P:Canada
Y:PX(Far East, Hawaii) T:England E:Europe
Y:AAFES(Europe) X:Australia M:Other Areas

⚠ indicates safety critical components.

PARTS LIST

* : New Parts.
Parts without Parts No. are not supplied.
Les articles sans numéro de pièce ne sont pas fournis.
Teile ohne Parts No. werden nicht geliefert.

UT-28S
UT-50S
UT-220S
UT-440S

Ref. No. 参照番号	Address 位置	New Parts 新	Parts No. 部品番号	Description 部品名／規格	Destination 仕向	Remarks 備考
328	3T	*	B62-0110-04	OUTER PACKING CASE		
330	1U		J69-0325-05	O RING		
335	1U		N99-0355-05	SCREW SET		
340	1U,2T		X57-3790-01	TX-RX UNIT(28MHZ 50W)		
			UT-50S			
300	1U		B41-0686-04	CAUTION LABEL(ADJUST)		
303	1T		B42-2437-04	LABEL(S/NO,UNIT)		
305	1T		B42-2454-04	LABEL(S/NO,ITEM CARTON BOX)		
309	2U		B42-3488-04	LABEL(FREQUENCY)		
311	1T		B62-0089-10	INSTRUCTION MANUAL		
313	2U		E23-0657-04	TERMINAL		
315	1U		G11-0665-04	SHEET(FAN CABLE)		
317	1U,2T		H10-2726-03	POLYSTYRENE FOAMED FIXTURE		
320	1T		H13-0855-04	PROTECTION BOARD		
322	2U		H25-0029-04	PROTECTION BAG(60X110)		
324	1T,1U	*	H25-0760-04	PROTECTION BAG(200X350)		
326	2T	*	H52-0133-04	ITEM CARTON BOX		
328	3T	*	H62-0113-04	OUTER CARTON BOX		
330	1U		J69-0325-05	O RING		
335	1U		N99-0355-05	SCREW SET		
340	1U,2T	*	X57-3800-01	TX-RX UNIT(50M 50W)		
			UT-220S			
300	1U		B41-0686-04	CAUTION LABEL(ADJUST)		
303	1T		B42-2437-04	LABEL(S/NO,UNIT)		
305	3T		B42-2454-04	LABEL(S/NO,ITEM CARTON BOX)		
309	2U		B42-3488-04	LABEL(FREQUENCY)		
311	1T		B62-0089-10	INSTRUCTION MANUAL		
313	2U		E23-0657-04	TERMINAL		
315	1U		G11-0665-04	SHEET(FAN CABLE)		
317	1U,2T		H10-2726-03	POLYSTYRENE FOAMED FIXTURE		
320	1T		H13-0855-04	PROTECTION BOARD		
322	2U		H25-0029-04	PROTECTION BAG(60X110)		
324	1T,1U		H25-0760-04	PROTECTION BAG(200X350)		
326	2T	*	H52-0136-04	ITEM CARTON BOX		
328	3T	*	H62-0116-04	OUTER PACKING CASE		
330	1U		J69-0325-05	O RING		
335	1U		N99-0355-05	SCREW SET		
340	1U,2T	*	X57-3810-10	TX-RX UNIT(220MHZ 25W)		
			UT-440S			
300	1U		B41-0686-04	CAUTION LABEL(ADJUST)		
303	1T		B42-2437-04	LABEL(S/NO,UNIT)		
305	1T		B42-2454-04	LABEL(S/NO,ITEM CARTON BOX)		
309	2U		B42-3488-04	LABEL(FREQUENCY)		
311	1T		B62-0089-10	INSTRUCTION MANUAL		

L:Scandinavia K:USA P:Canada
Y:PX(Far East, Hawaii) T:England E:Europe
Y:AAFES(Europe) X:Australia M:Other Areas

⚠ indicates safety critical components.

PARTS LIST

* New Parts
Parts without Parts No. are not supplied.
Les articles non mentionnes dans le Parts No. ne sont pas fournis
Teile ohne Parts No. werden nicht geliefert.

UT44DS
UT-1200
CONTROL UNIT (X53-331X-XX)

Ref. No. 参照番号	Address 位置	New Parts 新	Parts No. 部品番号	Description 部品名／規格	Destination 仕向	Remarks 備考
313	2U		E23-0657-04	TERMINAL		
315	1U		G11-0665-04	SHEET(PAN CABLE)		
317	1U,2T		H10-2726-03	POLYSTYRENE FOAMED FIXTURE		
320	1T		H13-0855-04	PROTECTION BOARD		
322	2U		H25-0029-04	PROTECTION BAG(60X110)		
324	1T,1U		H25-0760-04	PROTECTION BAG(200X350)		
326	2T	*	H52-0197-04	ITEM CARTON BOX		
328	3T	*	H62-0169-04	OUTER PACKING CASE		
330	1U		J69-0325-05	O RING		
335	1U		N99-0355-05	SCREW SET		
340	1U,2T		X57-3990-12	TX-RXUNIT(440MHZ 35W)		
UT-1200						
300	1U	*	B41-0686-04	CAUTION LABEL(ADJUST)		
303	1T		B42-2437-04	LABEL(S/NO)		
305	1T		B42-2454-04	LABEL(S/NO.ITEM CARTON BOX)		
309	2U	*	B42-2468-04	LABEL(FREQUENCY)		
311	1T	*	B62-0089-10	INSTRUCTION MANUAL		
313	2U		E23-0657-04	TERMINAL		
315	1U	*	G11-0665-04	SHEET(PAN CABLE)		
317	1U,2T	*	H10-2726-03	POLYSTYRENE FOAMED FIXTURE		
320	1T	*	H13-0855-04	PROTECTION BOARD		
322	2U		H25-0029-04	PROTECTION BAG(60X110)		
324	1T,1U		H25-0760-04	PROTECTION BAG(200X350)		
326	2T	*	H52-0112-04	ITEM CARTON BOX		
328	3T	*	H62-0101-04	OUTER CARTON BOX		
330	1U		J69-0325-05	O RING		
335	1U	*	N99-0355-05	SCREW SET		
340	1U,2T		X57-3600-11	TX-RX UNIT(1200MHZ 10W)		
CONTROL UNIT (X53-331X-XX) 0-12:K, P, M, M2 2-71:E						
C1 -4			CK73FB1H102K	CHIP C 1000PF K		
C5			CK73PB1E104K	CHIP C 0.10UF K		
C6			CK73FF1C105Z	CHIP C 1.0UF Z		
C7			CK73PB1E223K	CHIP C 0.022UF K		
C8			CK73FB1H102K	CHIP C 1000PF K		
C9			CK73PB1E104K	CHIP C 0.10UF K		
C10			CK73FB1H102K	CHIP C 1000PF K		
C11			CK73FF1C105Z	CHIP C 1.0UF Z		
C12			CK73FB1H102K	CHIP C 1000PF K		
C13			CK73FB1E223K	CHIP C 0.022UF K		
C14			CK73FB1H102K	CHIP C 1000PF K		
C15			CC73FCH1H390J	CHIP C 39PF J		
C16			CC73FCH1H330J	CHIP C 33PF J		
C17 -19			C92-0005-05	ELECTRO 2.2UF 6.3WV		
C20 -28			CK73FB1E104K	CHIP C 0.10UF K		
C29			CK73FF1C105Z	CHIP C 1.0UF Z		
C30			CK73FB1E104K	CHIP C 0.10UF K		
C31			C92-0507-05	CHIP TAN 4.7UF 6.3WV		

L:Scandinavia K:USA P:Canada
Y:PX(Far East, Hawaii) T:England E:Europe
Y:AAFES(Europe) X:Australia M:Other Areas

⚠ indicates safety critical components.

PARTS LIST

* : New Parts.
Parts without Parts No. are not supplied.
The underlined part number does not have the same specifications as the current one.
Replacement Parts: Use the new part number.

CONTROL UNIT (X53-331X-XX)

Ref. No. 参照番号	Address 位置	New Parts 新	Parts No. 部品番号	Description 部品名／規格			Destination 仕向	Remarks 備考
C32 -35			CK73FB1H102K	CHIP C	1000PF	K		
C36 ,37			CC73FSL1H101J	CHIP C	100PF	J		
C38 -40			CK73FB1H102K	CHIP C	1000PF	K		
C41			CE04EW1A101M	ELECTRO	100UF	10WV		
C42			CK73FF1C105Z	CHIP C	1.0UF	Z		
C43			CK73FB1H102K	CHIP C	1000PF	K		
C44			CK73FB1E103K	CHIP C	0.01UF	K		
C45 ,46			CK73FB1H102K	CHIP C	1000PF	K		
C47 -49			CK73FB1E104K	CHIP C	0.10UF	K		
C50			CK73FF1C105Z	CHIP C	1.0UF	Z		
C51			CC73FSL1H101J	CHIP C	100PF	J		
C101-103			CK73FB1H102K	CHIP C	1000PF	K		
C104			CE04EW1C470M	ELECTRO	47UF	16WV		
C105			CK73FB1H102K	CHIP C	1000PF	K		
C106			CE04EW1A470M	ELECTRO	47UF	10WV		
C107,108			CK73FB1E123K	CHIP C	0.012UF	K		
C109			C92-0507-05	CHIP TAN	4.7UF	6.3WV		
C110			CK73FB1H682K	CHIP C	6800PF	K		
C111			CK73FF1C105Z	CHIP C	1.0UF	Z		
C112-114			CK73FB1E104K	CHIP C	0.10UF	K		
C116			CE04EW1A471M	ELECTRO	470UF	10WV		
C117-120			CE04EW1A470M	ELECTRO	47UF	10WV		
C121			CE04EW1C101M	ELECTRO	100UF	16WV		
C122-125			CE04EW1A470M	ELECTRO	47UF	10WV		
C126			CE04EW1C101M	ELECTRO	100UF	16WV		
C127-129			CK73FB1E104K	CHIP C	0.10UF	K		
C130,131			CK73FB1H102K	CHIP C	1000PF	K		
C132		*	C90-2167-05	ELECTRO	100UF	16WV		
C133-135			CE04EW1A471M	ELECTRO	470UF	10WV		
C136			CK73FB1H102K	CHIP C	1000PF	K		
C137			CK73FB1E123K	CHIP C	0.012UF	K		
C138			CE04EW1C470M	ELECTRO	47UF	16WV		
C139			CK73FB1E223K	CHIP C	0.022UF	K		
C140,141			CK73FB1E103K	CHIP C	0.01UF	K		
C142,143			CK73FB1H102K	CHIP C	1000PF	K		
C144			CC73FSL1H101J	CHIP C	100PF	J		
C145,146			CK73FF1C105Z	CHIP C	1.0UF	Z		
CN1 ,2			E40-5417-05	PIN CONNECTOR	(13P)			
CN3			E40-5246-05	PIN CONNECTOR	(2P)			
CN4			E40-5248-05	PIN CONNECTOR	(4P,PANEL)			
CN5			E40-5188-05	PIN CONNECTOR	(11P,DTSS)			
CN6			E40-5183-05	PIN CONNECTOR	(6P,DTSS)			
CN7			E40-5343-05	PIN CONNECTOR	(9P,CROSS)			
CN8			E40-5224-05	PIN CONNECTOR	(16P)			
CN101-106			E40-5452-05	PIN CONNECTOR	(12P)			
CN107,108			E40-5400-05	PIN CONNECTOR	(13P)			
CN109			E40-5224-05	PIN CONNECTOR	(16P)			
J1			E11-0425-05	PHONE JACK	(3.5D)			
J2		*	E08-0876-05	RECTANGULAR RECEPTACLE(8P)				
W1			E33-1871-15	FINISHED WIRE SET				
W2 ,3		*	E33-1943-05	FINISHED WIRE SET				
W201		*	E37-0187-15	CONNECTING WIRE(FAN)				
X1			L77-1383-05	CRYSTAL RESONATOR(4.19MHZ)				

L:Scandinavia K:USA P:Canada
Y:PX(Far East, Hawaii) T:England E:Europe
Y:AAFES(Europe) X:Australia M:Other Areas

⚠ indicates safety critical components.

PARTS LIST

* : New Parts.
-: Parts without Parts No. are not supplied.
Les articles non mentionnés dans le Parts No. ne sont pas fournis.
Teile ohne Parts No. werden nicht geliefert.

CONTROL UNIT (X53-331X-XX)

Ref. No. 参照番号	Address 位置	New Parts 新	Parts No. 部品番号	Description 部品名／規格			Destination 仕向	Remarks 備考
R1 -3			RK73FB2A102J	CHIP R	1.0K	J 1/10W		
R4 -6			RK73FB2A473J	CHIP R	47K	J 1/10W		
R7			RK73FB2A102J	CHIP R	1.0K	J 1/10W		
R8			R90-0711-05	MULTI-COMP				
R9			RK73FB2A102J	CHIP R	1.0K	J 1/10W		
R10			RK73FB2A154J	CHIP R	150K	J 1/10W		
R11			RK73FB2A333J	CHIP R	33K	J 1/10W		
R12			RK73FB2A102J	CHIP R	1.0K	J 1/10W		
R13			RK73FB2A102J	CHIP R	1.0K	J 1/10W	E	
R13			RK73FB2A392J	CHIP R	3.9K	J 1/10W	KPMM2	
R14			RK73FB2A332J	CHIP R	3.3K	J 1/10W	KPMM2	
R14			RK73FB2A682J	CHIP R	6.8K	J 1/10W	E	
R15			RK73FB2A183J	CHIP R	18K	J 1/10W		
R16			RK73FB2A104J	CHIP R	100K	J 1/10W		
R17			RK73FB2A182J	CHIP R	1.8K	J 1/10W		
R18			RK73FB2A221J	CHIP R	220	J 1/10W		
R19			RK73FB2A563J	CHIP R	56K	J 1/10W		
R20 ,21			RK73FB2A473J	CHIP R	47K	J 1/10W		
R22			RK73FB2A472J	CHIP R	4.7K	J 1/10W		
R23 -28			RK73FB2A153J	CHIP R	15K	J 1/10W		
R29			RK73FB2A684J	CHIP R	680K	J 1/10W		
R30			RK73FB2A272J	CHIP R	2.7K	J 1/10W		
R31			RK73FB2A102J	CHIP R	1.0K	J 1/10W		
R32			RK73FB2A684J	CHIP R	680K	J 1/10W		
R33			RK73FB2A272J	CHIP R	2.7K	J 1/10W		
R34			RK73FB2A102J	CHIP R	1.0K	J 1/10W		
R35			RK73FB2A684J	CHIP R	680K	J 1/10W		
R36			RK73FB2A272J	CHIP R	2.7K	J 1/10W		
R37			RK73FB2A102J	CHIP R	1.0K	J 1/10W		
R38 -40			RK73FB2A104J	CHIP R	100K	J 1/10W		
R41			RK73FB2A103J	CHIP R	10K	J 1/10W		
R42			RK73FB2A105J	CHIP R	1.0M	J 1/10W		
R43			RK73FB2A123J	CHIP R	12K	J 1/10W		
R44 -47			RK73FB2A103J	CHIP R	10K	J 1/10W		
R48			RK73FB2A683J	CHIP R	68K	J 1/10W		
R49			RK73FB2A473J	CHIP R	47K	J 1/10W		
R50			RK73FB2A474J	CHIP R	470K	J 1/10W		
R51			RK73FB2A124J	CHIP R	120K	J 1/10W		
R52			RK73FB2A472J	CHIP R	4.7K	J 1/10W		
R53			RK73FB2A224J	CHIP R	220K	J 1/10W		
R54			RK73FB2A184J	CHIP R	180K	J 1/10W		
R55			RK73FB2A474J	CHIP R	470K	J 1/10W		
R56			R92-0670-05	CHIP R	0 OHM			
R57			RK73FB2A223J	CHIP R	22K	J 1/10W		
R58			R92-0670-05	CHIP R	0 OHM			
R59			RK73FB2A472J	CHIP R	4.7K	J 1/10W		
R60			R92-1291-05	CHIP R	2.7	J 1W		
R61 -63			RK73FB2A474J	CHIP R	470K	J 1/10W		
R64 -67			RK73FB2A473J	CHIP R	47K	J 1/10W		
R68			RK73FB2A472J	CHIP R	4.7K	J 1/10W		
R69			RK73FB2A103J	CHIP R	10K	J 1/10W		
R70			RK73FB2A473J	CHIP R	47K	J 1/10W		
R71			RK73FB2A472J	CHIP R	4.7K	J 1/10W		
R72			RK73FB2A822J	CHIP R	8.2K	J 1/10W		
R73			RK73FB2A153J	CHIP R	15K	J 1/10W		

L:Scandinavia K:USA P:Canada
M:PX(Far East, Hawaii) T:England E:Europe
M:AAFES(Europe) X:Australia M:Other Areas

⚠ indicates safety critical components

PARTS LIST

* New Parts
-Parts without Parts No. are not available.
Les articles non mentionnés dans le Parts No. ne sont pas fournis.
Teile ohne Parts No. werden nicht geliefert.

CONTROL UNIT (X53-331X-XX)

Ref. No. 参照番号	Address 位置	New Parts 新	Parts No. 部品番号	Description 部品名/規格			Destination 仕向	Remarks 備考
R74			RK73FB2A473J	CHIP R	47K	J 1/10W		
R75 ,76			RK73FB2A102J	CHIP R	1.0K	J 1/10W		
R77			RK73FB2A105J	CHIP R	1.0M	J 1/10W		
R78			RK73FB2A471J	CHIP R	470	J 1/10W		
R79			RK73FB2A272J	CHIP R	2.7K	J 1/10W		
R101			RK73FB2A273J	CHIP R	27K	J 1/10W		
R102			RK73FB2A123J	CHIP R	12K	J 1/10W		
R103			RK73FB2A562J	CHIP R	5.6K	J 1/10W		
R104			RK73FB2A272J	CHIP R	2.7K	J 1/10W		
R105			RK73FB2A122J	CHIP R	1.2K	J 1/10W		
R106			RK73FB2A561J	CHIP R	560	J 1/10W		
R107			RK73FB2A273J	CHIP R	27K	J 1/10W		
R108			RK73FB2A123J	CHIP R	12K	J 1/10W		
R109			RK73FB2A562J	CHIP R	5.6K	J 1/10W		
R110			RK73FB2A272J	CHIP R	2.7K	J 1/10W		
R111			RK73FB2A122J	CHIP R	1.2K	J 1/10W		
R112			RK73FB2A561J	CHIP R	560	J 1/10W		
R113			RK73FB2A273J	CHIP R	27K	J 1/10W		
R114			RK73FB2A123J	CHIP R	12K	J 1/10W		
R115			RK73FB2A562J	CHIP R	5.6K	J 1/10W		
R116			RK73FB2A272J	CHIP R	2.7K	J 1/10W		
R117			RK73FB2A122J	CHIP R	1.2K	J 1/10W		
R118			RK73FB2A561J	CHIP R	560	J 1/10W		
R119			RK73FB2A472J	CHIP R	4.7K	J 1/10W		
R120			RK73FB2A103J	CHIP R	10K	J 1/10W		
R121			R92-1215-05	CHIP R	470	J 1/2W		
R122-124			RK73FB2A103J	CHIP R	10K	J 1/10W		
R125-129			RK73FB2A104J	CHIP R	100K	J 1/10W		
R130			RK73FB2A183J	CHIP R	18K	J 1/16W		
R131			RK73EB2B183J	CHIP R	18K	J 1/16W		
R132,133			RK73FB2A183J	CHIP R	18K	J 1/10W		
R134			RK73FB2A4R7J	CHIP R	4.7	J 1/10W		
R135			RK73FB2A473J	CHIP R	47K	J 1/10W		
R136,137			RK73FB2A101J	CHIP R	100	J 1/10W		
R138,139			RK73FB2A473J	CHIP R	47K	J 1/10W		
R140,141			RK73FB2A101J	CHIP R	100	J 1/10W		
R142			RK73FB2A473J	CHIP R	47K	J 1/10W		
R143-145			RK73FB2A4R7J	CHIP R	4.7	J 1/10W		
R146			RK73FB2A474J	CHIP R	470K	J 1/10W		
R147,148			RK73FB2A183J	CHIP R	18K	J 1/10W		
R149			RK73FB2A332J	CHIP R	3.3K	J 1/10W		
R150			RK73FB2A474J	CHIP R	470K	J 1/10W		
R151,152			RK73FB2A183J	CHIP R	18K	J 1/10W		
R153			RK73FB2A332J	CHIP R	3.3K	J 1/10W		
R154			RK73FB2A183J	CHIP R	18K	J 1/10W		
R155			RK73FB2A183J	CHIP R	18K	J 1/10W		
R156			RK73FB2A474J	CHIP R	470K	J 1/10W		
R157			RK73FB2A332J	CHIP R	3.3K	J 1/10W		
R158			RK73FB2A473J	CHIP R	47K	J 1/10W		
R159			RK73FB2A473J	CHIP R	47K	J 1/10W		
R160			R92-0685-05	CHIP R	22	J 1/2W		
R161			RK73FB2A472J	CHIP R	4.7K	J 1/10W		
R162-169			RK73FB2A473J	CHIP R	47K	J 1/10W		
R170			RK73FB2A563J	CHIP R	56K	J 1/10W		
R171			RK73FB2A103J	CHIP R	10K	J 1/10W		

L:Scandinavia K:USA P:Canada
Y:PX(Far East, Hawaii) T:England E:Europe
Y:MAFES(Europe) X:Australia M:Other Areas

⚠ indicates safety critical components

PARTS LIST

* New Parts
Parts without Parts No. are not supplied.
Les articles non mentionnés dans le Parts No. ne sont pas fournis
Teile ohne Parts No. werden nicht geliefert.

CONTROL UNIT (X53-331X-XX)
DISPLAY UNIT (X54-312X-XX)

Ref. No. 参照番号	Address 位置	New Parts 新	Parts No. 部品番号	Description 部品名／規格	Destination 仕向	Remarks 備考
R172			RK73FB2A473J	CHIP R 47K J 1/10W		
R173,174			RK73FB2A472J	CHIP R 4.7K J 1/10W		
R175-177			RK73FB2A102J	CHIP R 1.0K J 1/10W		
R178			R92-0670-05	CHIP R 0 OHM		
D1			1SS184	DIODE		
D2			LFB01	DIODE		
D3			D2CZ6.8(X)	DIODE		
D4			LFB01	DIODE		
D5			D2CZ3.0(Z)	DIODE		
D6			LFB01	DIODE		
D101-103			1SS226	DIODE		
IC1		*	75517GF-014-389	IC(CPU)		
IC2			LC3564PML-12,15	IC(64K RAM/MEMORY BACK UP)		
IC3			TA78L06F	IC(6V AVR)		
IC4 ,5			TC9154AP	IC(2CH ELECTRONIC VOLUME)		
IC6 ,7			BU4094BF	IC(SHIFT REGISTOR)		
IC8 ,9			BU4053BF	IC(ANALOG SWITCH)		
IC10			NJM4558E	IC(AF AMP ADDER)		
IC11,12			TC4S11F	IC(2 INPUT NAND GATE)		
IC101			CXD1095Q	IC(I/O EXPANDER)		
IC102			MC78T08CT	IC(8V AVR)		
IC103			NJM4558E	IC(ADDER)		
IC104,105			LA4446	IC(AF PA)		
IC106			BU4053BF	IC(ANALOG SW)		
IC107-110			BU4066BF	IC(ANALOG SWITCH X4)		
Q1			2SC3324(G)	TRANSISTOR		
Q2			2SC2712(Y)	TRANSISTOR		
Q3			DTC114EK	DIGITAL TRANSISTOR		
Q4 -6			2SC2712(Y)	TRANSISTOR		
Q9 -11			DTC114EK	DIGITAL TRANSISTOR		
Q12			2SC1757K	TRANSISTOR		
Q13 -15			2SD1757(S)	TRANSISTOR		
Q16			2SA1519	TRANSISTOR		
Q17			2SC2712(Y)	TRANSISTOR		
Q101			2SC2712(Y)	TRANSISTOR		
Q102			2SA1641(S,T)	TRANSISTOR		
Q103			DTD143EK	DIGITAL TRANSISTOR		
Q104,105			DTC114EK	DIGITAL TRANSISTOR		
Q106			DTC144EK	DIGITAL TRANSISTOR		
Q107			2SC2712(Y)	TRANSISTOR		
Q108			DTA144EK	DIGITAL TRANSISTOR		
BA1	3H		W09-0573-05	LITHIUM BATTERY		
DISPLAY UNIT (X54-312X-XX) 0-11:K, P 0-21:M 0-22:M2 2-71:E						
			B11-0487-05	FILTER(LCD)		
			B11-0500-15	FILTER(KNOB)		
		*	B11-3026-04	FILTER(LCD)		
		*	B38-0357-05	LCD		
PL1 -6			B30-0866-15	LAMP		
C1			C92-0038-05	ELECTRO 22UF 16WV		
C2			CK73FB1H102K	CHIP C 1000PF K		
C3		*	C92-0048-05	ELECTRO 100UF 6.3WV		
C4 ,5			CK73FB1H102K	CHIP C 1000PF K		
C7			CK73FB1E223K	CHIP C 0.022UF K		

L:Scandinavia K:USA P:Canada
Y:PX(Far East, Hawaii) T:England E:Europe
Y:AAFES(Europe) X:Australia M:Other Areas

⚠ indicates safety critical components.

PARTS LIST

* New Parts
Parts without Parts No. are not supplied.
Addresses marked ones are Parts No. re sent per forms.
Side cars Parts No. wrong ? ort general.

DISPLAY UNIT (X54-312X-XX)

Ref. No. 参照番号	Address 位置	New Parts 新	Parts No. 部品番号	Description 部品名／規格			Destination 仕向	Remarks 備考
C8			CK73FB1H102K	CHIP C	1000PF	K		
C9 ,10			CC73FSL1H101J	CHIP C	100PF	J		
C11			CK73FB1E223K	CHIP C	0.022UF	K		
C12			CK73FB1H102K	CHIP C	1000PF	K		
C13			CK73FB1E103K	CHIP C	0.01UF	K		
C14 ,15			CC73FCH1H330J	CHIP C	33PF	J		
C16 ,17			CC73FCH1H150J	CHIP C	15PF	J		
C18			CK73FB1H102K	CHIP C	1000PF	K		
C19			CK73FF1C105Z	CHIP C	1.0UF	Z		
C20			CK73FB1H102K	CHIP C	1000PF	K		
C21			CK73FB1E103K	CHIP C	0.01UF	K		
C22			CK73FB1H102K	CHIP C	1000PF	K		
C23			CK73FB1E103K	CHIP C	0.01UF	K		
C101-104			CK73FB1E103K	CHIP C	0.01UF	K		
C201-204			CK73FB1E103K	CHIP C	0.01UF	K		
C301-304			CK73FB1E103K	CHIP C	0.01UF	K		
			E29-0500-14	CONNECTOR				
			E37-0264-05	FLAT CABLE				
CN1		*	E40-3262-05	PIN CONNECTOR (4P)				
			F20-1088-04	INSULATING BOARD(LITHIUM BATT)				
			J21-4359-25	MOUNTING HARDWARE(LCD)				
			J39-0439-05	LAMP HOLDER				
X1			L77-1397-05	CRYSTAL RESONATOR(4.19MHZ)				
X2			L77-1256-05	CRYSTAL RESONATOR(32.768KHZ)				
			N14-0552-05	NUT(VOLUME)				
			N80-2006-45	PAN HEAD TAPTITE SCREW				
R1		*	R92-1279-05	FIXED RESISTOR				
R2			RK73FB2A472J	CHIP R	4.7K	J 1/10W		
R3			RK73FB2A473J	CHIP R	47K	J 1/10W		
R4			RK73FB2A563J	CHIP R	56K	J 1/10W		
R5			RK73FB2A106J	CHIP R	10M	J 1/10W		
R6			RK73FB2A103J	CHIP R	10K	J 1/10W		
R7			RK73FB2A331J	CHIP R	330	J 1/10W		
R8			R92-1211-05	SOLID R	5.6K	J 1/2W		
R9			RK73FB2A222J	CHIP R	2.2K	J 1/10W		
R10			RK73FB2A102J	CHIP R	1.0K	J 1/10W		
R11			RK73FB2A472J	CHIP R	4.7K	J 1/10W		
R12			RK73FB2A222J	CHIP R	2.2K	J 1/10W		
R13			RK73FB2A272J	CHIP R	2.7K	J 1/10W		
R14			RK73FB2A123J	CHIP R	12K	J 1/10W		
R15 -17			RK73FB2A100J	CHIP R	10	J 1/10W		
R18			RK73FB2A472J	CHIP R	4.7K	J 1/10W		
R19			RK73FB2A103J	CHIP R	10K	J 1/10W		
R20			RK73FB2A473J	CHIP R	47K	J 1/10W		
R21			RK73FB2A334J	CHIP R	330K	J 1/10W		
R22			RK73FB2A221J	CHIP R	220	J 1/10W		
R23			RK73FB2A391J	CHIP R	390	J 1/10W		
R24			RK73FB2A221J	CHIP R	220	J 1/10W		
R25			RK73FB2A331J	CHIP R	330	J 1/10W		
R26			RK73FB2A221J	CHIP R	220	J 1/10W		
R27			RK73FB2A391J	CHIP R	390	J 1/10W		

L:Scandinavia K:USA P:Canada
Y:PX(Far East, Hawaii) T:England E:Europe
Y:AAFES(Europe) X:Australia M:Other Areas

⚠ Indicates safety critical components

PARTS LIST

* New Parts
Parts without Parts No. are not supplied.
Les articles sans nomenclature dans la Parts No. ne sont pas fournis.
Teile ohne Parts No. werden nicht geliefert.

DISPLAY UNIT (X54-312X-XX)

Ref. No. 参照番号	Address 位置	New Parts 新	Parts No. 部品番号	Description 部品名／規格	Destination 仕向	Remarks 備考
R28			RK73FB2A221J	CHIP R 220 J 1/10W		
R29			RK73FB2A331J	CHIP R 330 J 1/10W		
R30			RK73FB2A221J	CHIP R 220 J 1/10W		
R31			RK73FB2A391J	CHIP R 390 J 1/10W		
R32			RK73FB2A221J	CHIP R 220 J 1/10W		
R33			RK73FB2A331J	CHIP R 330 J 1/10W		
R34 ,35			RK73FB2A100J	CHIP R 10 J 1/10W		
R36			RK73FB2A105J	CHIP R 1.0M J 1/10W		
R37			RK73FB2A104J	CHIP R 100K J 1/10W		
R38 ,39			RK73FB2A222J	CHIP R 2.2K J 1/10W		
R40			RK73FB2A223J	CHIP R 22K J 1/10W		
R41 ,42			RK73FB2A100J	CHIP R 10 J 1/10W		
R43 -51			RK73FB2A473J	CHIP R 47K J 1/10W		
R52			RK73FB2A103J	CHIP R 10K J 1/10W		
R53			RK73FB2A333J	CHIP R 33K J 1/10W		
R54			R92-0670-05	CHIP R 0 OHM	KPMC	
R55			R92-0670-05	CHIP R 0 OHM	KPS	
R56			R92-0670-05	CHIP R 0 OHM	KPMM2	
R57			R92-0670-05	CHIP R 0 OHM		
R58			RK73FB2A102J	CHIP R 1.0K J 1/10W		
R59 -61			RK73FB2A473J	CHIP R 47K J 1/10W		
R62			RK73FB2A473J	CHIP R 47K J 1/10W	MM2S	
R63 -65			RK73FB2A473J	CHIP R 47K J 1/10W		
R66 -71			RK73FB2A151J	CHIP R 150 J 1/10W		
R72			RK73FB2A473J	CHIP R 47K J 1/10W	KP	
VR101			R23-9407-05	POTENTIOMETER		
VR201			R23-9407-05	POTENTIOMETER		
VR301			R23-9407-05	POTENTIOMETER		
S1		*	S70-0408-05	TACT SWITCH		
S2		*	S62-0412-05	SLIDE SWITCH		
S3 -12		*	S70-0408-05	TACT SWITCH		
S13 -15		*	S70-0409-05	TACT SWITCH		
S16		*	S70-0408-05	TACT SWITCH		
S17	2K		W02-0386-05	ENCODER		
D1 ,2			1SS184	DIODE		
D3			02CZ7.5(X,Y)	DIODE		
D4 -9			B3C-2108-05	LED(RED)		
D10			LPB01	DIODE		
IC1		*	7551GGF-270-3B9	IC(CPU)		
IC2 ,3		*	MSM5265GS-WIX	IC(LCD DRIVER)		
IC4			TA78L06F	IC(6V AVR)		
IC5 ,6			TC4S11F	IC(INVERTER)		
IC7			S-8054ALR-LN	IC(RESET)		
Q1			2SC2712(Y)	TRANSISTOR		
Q2			2SA1162(Y)	TRANSISTOR		
Q3			2SC2712(Y)	TRANSISTOR		
Q4			2SA1307(Y)	TRANSISTOR		
Q5			2SA1162(Y)	TRANSISTOR		
Q6			2SC2712(Y)	TRANSISTOR		
Q7			2SD1624(S,T)	TRANSISTOR		
Q8			DTA114EK	DIGITAL TRANSISTOR		
BA1			W05-0394-05	LITHIUM BATTERY		

L:Scandinavia K:USA P:Canada
Y:PX(Far East, Hawaii) T:England E:Europe
Y:AAFES(Europe) X:Australia M:Other Areas

⚠ indicates safety critical components

PARTS LIST

* New Parts
Parts without Parts No. are not supplied.
The articles not mentioned are to Parts No. as same as Fourmis.
Terminal no. Parts No. wender might be different.

144M TX-RX UNIT (X57-3580-12)

Ref. No. 参照番号	Address 位置	New Parts 新	Parts No. 部品番号	Description 部品名／規格			Destination 仕向	Remarks 備考
144M TX-RX UNIT (X57-3580-12)								
			A10-1316-01	CHASSIS				
			B42-2437-04	LABEL(S/N)				
C5			CC73PCH1H040C	CHIP C	4PF	C		
C6			CK73FB1H102K	CHIP C	1000PF	K		
C7 -9			CK73FB1H102K	CHIP C	1000PF	K		
C10			CK73FB1E103K	CHIP C	0.01UF	K		
C11			CC73FCH1H0R5C	CHIP C	0.5PF	C		
C12			CC73PCH1H151J	CHIP C	150PF	J		
C13			CC73FCH1H0J0C	CHIP C	3PF	C		
C14			CC73FCH1H0R5C	CHIP C	0.5PF	C		
C15			CC73FCH1H150J	CHIP C	15PF	J		
C16			CC73FCH1H020C	CHIP C	2.0PF	C		
C18			CK73FB1H102K	CHIP C	1000PF	K		
C19			CC73FCH1H060D	CHIP C	6PF	D		
C20			CK73FB1H102K	CHIP C	1000PF	K		
C21			CC73FCH1H050C	CHIP C	5PF	C		
C22			CK73FB1E103K	CHIP C	0.01UF	K		
C23			CK73FB1H102K	CHIP C	1000PF	K		
C24			CK73FB1E103K	CHIP C	0.01UF	K		
C26			CK73FB1H102K	CHIP C	1000PF	K		
C29			CK73FB1E103K	CHIP C	0.01UF	K		
C30			CC73FCH1H390J	CHIP C	39PF	J		
C31			CC73FCH1H101J	CHIP C	100PF	J		
C32			CK73FB1H102K	CHIP C	1000PF	K		
C33			CK73FB1E104K	CHIP C	0.10UF	K		
C34 ,35			CK73EF1C105Z	CHIP C	1.0UF	Z		
C36 ,37			CK73FB1E103K	CHIP C	0.01UF	K		
C39			CC73FCH1H010C	CHIP C	1.0PF	C		
C44 ,45			CE04NW1C470M	ELECTRO	47UF	16WV		
C46			C92-0504-05	CHIP TAN	0.68UF	20WV		
C47			CE04NW1C470M	ELECTRO	47UF	16WV		
C48			C92-0003-05	CHIP TAN	0.47UF	25WV		
C49			CE04NW1E100M	ELECTRO	10UF	25WV		
C50			CE04NW1C470M	ELECTRO	47UF	16WV		
C51 ,52			CK73FB1E103K	CHIP C	0.01UF	K		
C53 ,54			CK73FB1H102K	CHIP C	1000PF	K		
C55			CK73EF1C105Z	CHIP C	1.0UF	Z		
C56			CC73PUJ1H150J	CHIP C	15PF	J		
C57			CK73FB1H102K	CHIP C	1000PF	K		
C58			CC73PUJ1H220J	CHIP C	22PF	J		
C59 ,60			CK73FB1H102K	CHIP C	1000PF	K		
C61			CE04NW1C470M	ELECTRO	47UF	16WV		
C62			CK73FB1H102K	CHIP C	1000PF	K		
C63			CK73FB1E103K	CHIP C	0.01UF	K		
C64			CE04NW1E100M	ELECTRO	10UF	25WV		
C65		*	CE04NW1A330M	ELECTRO	33UF	10WV		
C66			CK73FB1E103K	CHIP C	0.01UF	K		
C67			CK73FB1H102K	CHIP C	1000PF	K		
C68			CC73PCH1H100D	CHIP C	10PF	D		
C69			CC73FCH1H100D	CHIP C	10PF	D		
C70			CK73FB1E103K	CHIP C	0.01UF	K		
C71 -73			CK73FB1H102K	CHIP C	1000PF	K		

L:Scandinavia K:USA P:Canada
P:PX(Far East, Hawaii) T:England E:Europe
Y:AAFES(Europe) X:Australia M:Other Areas

⚠ indicates safety critical components

PARTS LIST

× New Parts
Parts without Parts No. are not supplied
Les articles non mentionnés dans le Parts No. ne sont pas fournis
Telle ohne Parts No. werden nicht geliefert.

144M TX-RX UNIT (X57-3680-12)

Ref. No. 参照番号	Address 位置	New Parts 新	Parts No. 部品番号	Description 部品名／規格	Destination 仕向	Remarks 備考
C74			CK73FB1H223K	CHIP C 0.022UF K		
C75			CE04NW1C101M	ELECTRO 100UF 16WV		
C76			CK73EF1C105Z	CHIP C 1.0UF Z		
C77 ,78			CK73FB1H102K	CHIP C 1000PF K		
C79			CK73EF1C105Z	CHIP C 1.0UF Z		
C80			CC73FCH1H050C	CHIP C 5PF C		
C81			CC45SL2H120J	CERAMIC 12PF J		
C82			CK73FB1H102K	CHIP C 1000PF K		
C83			CK45B2H102K	CERAMIC 1000PF K		
C84			CM73F2H330J	CHIP C 33PF J		
C85			CC73FCH1H220J	CHIP C 22PF J		
C86			CC73FCH1H0R5C	CHIP C 0.5PF C		
C87			CC73FCH1H020C	CHIP C 2.0PF C		
C88			CC45SL2H560J	CERAMIC 56PF J		
C89			CC45SL2H470J	CERAMIC 47PF J		
C90 -92			CK73FB1H102K	CHIP C 1000PF K		
C93			CC73FCH1H0R5C	CHIP C 0.5PF C		
C94			CM73F2H300J	CHIP C 30PF J		
C95			CC73FCH1H020C	CHIP C 2.0PF C		
C96			CK73FB1E103K	CHIP C 0.01UF K		
C98			CK73FB1H102K	CHIP C 1000PF K		
C99			CE04NW1E100M	ELECTRO 10UF 25WV		
C100			CK73FB1H102K	CHIP C 1000PF K		
C101			CE04NW1E100M	ELECTRO 10UF 25WV		
C103			CK73FB1H102K	CHIP C 1000PF K		
C104			CK73FB1E103K	CHIP C 0.01UF K		
C105			CK73FB1H223K	CHIP C 0.022UF K		
C110			CC73FCH1H030C	CHIP C 3PF C		
C111			CK73FB1E103K	CHIP C 0.01UF K		
C112			CE04NW1A221M	ELECTRO 220UF 10WV		
C113			CC73FCH1H100D	CHIP C 10PF D		
C114,115			CC73FSL1H101J	CHIP C 100PF J		
C116			CC73FCH1H080D	CHIP C 8PF D		
C119			CE04NW1E100M	ELECTRO 10UF 25WV		
C120-127			CC73FSL1H101J	CHIP C 100PF J		
C128,129			CK73FB1H102K	CHIP C 1000PF K		
C130			CE04SW1C102M	ELECTRO 1000UF 16WV		
TC1			C05-0345-05	TRIMMING CAP 10PF		
			E22-0672-04	TERMINAL BOARD(-)		
			E22-0673-04	TERMINAL BOARD(+)		
			E30-2145-05	ANT CABLE		
			E30-3007-05	DC POWER CORD		
CN1 ,2			E40-5461-05	PIN CONNECTOR		
J1			E11-0442-05	PHONE JACK		
J3			E23-0619-05	TERMINAL		
			F05-1531-05	FUSE		
			F10-1446-04	SHIELDING PLATE		
		×	F10-2010-03	SHIELDING COVER		
			F10-2012-04	SHIELDING CASE(VCO-PLL)		
			F20-1008-04	INSULATION SHEET(APC)		
		×	F51-0017-05	FUSE(15A)		
			G02-0600-14	FLAT SPRING(THERMAL SW)		
			G02-0705-04	FLAT SPRING		

L:Scandinavia K:USA P:Canada
Y:PX(Far East, Hawaii) T:England E:Europe
Y:AAFES(Europe) X:Australia M:Other Areas

⚠ indicates safety critical components.

PARTS LIST

* : New Parts
Parts without Parts No. are not available.
: Do not order from HQ. Use the Parts No. in the next higher assembly.
Tel & FAX Parts No. with "0" in the 4th digit are for test purpose.

144M TX-RX UNIT (X57-3580-12)

Ref. No. 参照番号	Address 位置	New Parts 新	Parts No. 部品番号	Description 部品名／規格	Destination 仕向	Remarks 備考
			G02-0715-04	LEAF SPRING(APC TR)		
			G02-0718-04	PLAT SPRING(VCO)		
			G05-0429-05	SPRING(DC CORD)		
			G11-2654-04	CUSHION(VCO)		
			G11-3655-04	CUSHION(CN1,CN2)		
			G11-0660-04	CUSHION(VCO)		
			G11-0661-04	INSULATION SHEET(APC TR)		
			G13-0841-04	FORMED PLATE(XTAL)		
			G13-1325-04	FORMED PLATE(VCO)		
			G13-1337-04	CUSHION(VCO)		
			G13-1349-04	CUSHION(VCO)		
			G53-0508-04	NON-WOVEN FABRIC		
			J30-0564-05	SPACER		
CB1			L79-1013-05	FILTER		
CF1			L72-0372-05	CERAMIC FILTER(CFWM455F)		
L1 -4			L34-4252-35	COIL		
L5			L40-1682-19	SMALL FIXED INDUCTOR(0.15UH)		
L6			L34-4251-05	COIL(1ST IF)		
L8			L34-1185-05	COIL(2.5T)		
L10			L40-3382-19	SMALL FIXED INDUCTOR(0.33UH)		
L11			L34-1239-05	COIL(10.5T)		
L12			L34-0895-05	COIL(6T)		
L13			L34-0742-05	COIL(6T)		
L14			L34-0908-05	COIL(9.5T)		
L15 -17			L34-0499-05	COIL(4.5T)		
L19			L40-8272-40	SMALL FIXED INDUCTOR(82NH)		
L20			L40-1001-19	SMALL FIXED INDUCTOR(10UH)		
X1			L77-1405-05	CRYSTAL RESONATOR(12.8MHZ)		
X2			L77-1473-05	CRYSTAL RESONATOR(10.245MHZ)		
XF1			L71-0228-05	CRYSTAL FILTER(10.7MHZ)		
			ND9-2077-05	SCREW(MODULE)		
			N87-2606-46	BRAZIER HEAD TAPTITE SCREW(ANT		
			N89-2606-46	FLAT HEAD TAPTITE SCREW		
R4			RK73FB2A103J	CHIP R 10K J 1/10W		
R5			RK73FB2A333J	CHIP R 33K J 1/10W		
R6			RK73FB2A274J	CHIP R 270K J 1/10W		
R7			RK73FB2A101J	CHIP R 100 J 1/10W		
R8			RK73FB2A103J	CHIP R 10K J 1/10W		
R9			RK73FB2A101J	CHIP R 100 J 1/10W		
R10 -12			RK73FB2A103J	CHIP R 10K J 1/10W		
R13			RK73FB2A473J	CHIP R 47K J 1/10W		
R14			RK73FB2A104J	CHIP R 100K J 1/10W		
R15			RK73FB2A683J	CHIP R 68K J 1/10W		
R16			RK73FB2A823J	CHIP R 82K J 1/10W		
R17			R92-0670-05	CHIP R 0 OHM		
R18			RK73FB2A470J	CHIP R 47 J 1/10W		
R19			RK73FB2A102J	CHIP R 1.0K J 1/10W		
R20			RK73FB2A152J	CHIP R 1.5K J 1/10W		
R21			RK73FB2A471J	CHIP R 470 J 1/10W		
R22			RK73FB2A101J	CHIP R 100 J 1/10W		
R23			RK73FB2A103J	CHIP R 10K J 1/10W		
R24			RK73FB2A473J	CHIP R 47K J 1/10W		
R25			RK73FB2A103J	CHIP R 10K J 1/10W		

L:Scandinavia K:USA P:Canada
Y:PX(Far East, Hawaii) T:England E:Europe
Y:AAFES(Europe) X:Australia M:Other Areas

⚠ indicates safety critical components.

PARTS LIST

* Only Parts
Parts without Parts No are not supplied.
As for the parts mentioned in the remarks column, Parts No. do not exist as single parts.
Some other Parts No. may be printed on the label affixed to the parts.

144M TX-RX UNIT (X57-3580-12)

Ref. No. 参照番号	Address 位置	New Parts 新	Parts No. 部品番号	Description 部品名／規格	Destination 仕向	Remarks 備考
R30			R92-0670-05	CHIP R 0 OHM		
R31			RK73FB2A394J	CHIP R 390K J 1/10W		
R33 ,34			R92-0670-05	CHIP R 0 OHM		
R35			RK73FB2A222J	CHIP R 2.2K J 1/10W		
R36			RK73FB2A101J	CHIP R 100 J 1/10W		
R37			R92-0670-05	CHIP R 0 OHM		
R38			RK73FB2A182J	CHIP R 1.8K J 1/10W		
R39 -41			RK73FB2A103J	CHIP R 10K J 1/10W		
R42			RK73FB2A182J	CHIP R 1.8K J 1/10W		
R43			RK73FB2A223J	CHIP R 22K J 1/10W		
R44			RK73FB2A273J	CHIP R 27K J 1/10W		
R45			RK73FB2A473J	CHIP R 47K J 1/10W		
R46			RK73FB2A472J	CHIP R 4.7K J 1/10W		
R47			R92-0670-05	CHIP R 0 OHM		
R49			RK73FB2A223J	CHIP R 22K J 1/10W		
R50			RK73FB2A124J	CHIP R 120K J 1/10W		
R52 -54			RK73FB2A473J	CHIP R 47K J 1/10W		
R55			RK73FB2A471J	CHIP R 470 J 1/10W		
R56			RK73FB2A104J	CHIP R 100K J 1/10W		
R57			RK73FB2A105J	CHIP R 1.0M J 1/10W		
R58			RK73FB2A473J	CHIP R 47K J 1/10W		
R59			R92-0670-05	CHIP R 0 OHM		
R60			RK73FB2A103J	CHIP R 10K J 1/10W		
R61			RK73FB2A471J	CHIP R 470 J 1/10W		
R62			R92-0670-05	CHIP R 0 OHM		
R63 ,64			RK73FB2A222J	CHIP R 2.2K J 1/10W		
R65 ,66			R92-0670-05	CHIP R 0 OHM		
R67			RK73FB2A122J	CHIP R 1.2K J 1/10W		
R68			RK73FB2A220J	CHIP R 22 J 1/10W		
R69			RK73FB2A470J	CHIP R 47 J 1/10W		
R71			R92-0670-05	CHIP R 0 OHM		
R73			RK73FB2A104J	CHIP R 100K J 1/10W		
R74			R92-0670-05	CHIP R 0 OHM		
R75			RK73FB2A103J	CHIP R 10K J 1/10W		
R76			R92-0670-05	CHIP R 0 OHM		
R78			R92-1213-05	CARBON 10 J 1/2W		
R79 ,80			RK73FB2A223J	CHIP R 22K J 1/10W		
R81			RK73FB2A471J	CHIP R 470 J 1/10W		
R82			R92-0685-05	CHIP R 22 J 1/2W		
R83			R92-0670-05	CHIP R 0 OHM		
R84 -86			R92-0670-05	CHIP R 0 OHM		
R89			RK73FB2A332J	CHIP R 3.3K J 1/10W		
R90			RK73FB2A221J	CHIP R 220 J 1/10W		
R91			RK73FB2A473J	CHIP R 47K J 1/10W		
R92			R92-0679-05	CHIP R 0 OHM		
R93			RK73FB2A104J	CHIP R 100K J 1/10W		
R98 ,99			RK73FB2A103J	CHIP R 10K J 1/10W		
R101			RK73FB2A102J	CHIP R 1K J 1/10W		
VR1			R12-6429-05	TRIM POT. 100K		
VR2			R12-6427-05	TRIM POT. 47K		
VR3			R12-6423-05	TRIM POT. 10K		
VR4			R12-6423-05	TRIM POT. 10K		
TS1			S79-0401-05	THERMAL SWITCH(95°C)		

L:Scandinavia K:USA P:Canada
Y:PX(Far East, Hawaii) T:England E:Europe
Y:AAFES(Europe) X:Australia M:Other Areas

⚠ indicates safety critical components.

PARTS LIST

* New Parts
Parts without Parts No. are not supplied.
Les articles non mentionnés dans le Parts No. ne sont pas fournis.
Tous entre Parts No. wordon nont gelieffert.

144M TX-RX UNIT (X57-3580-12)
430/440M TX-RX UNIT (X57-359X-XX)

Ref. No. 参照番号	Address 位置	New Parts 新	Parts No. 部品番号	Description 部品名／規格	Destination 仕向	Remarks 備考
D1			1SV164	DIODE		
D2			1SV166	DIODE		
D3 ,4			1SV164	DIODE		
D5			1SV166	DIODE		
D6			1SV164	DIODE		
D7			1SV166	DIODE		
D11			1SS184	DIODE		
D12			1SS184	DIODE		
D13			DAN235(K)	DIODE		
D14			1SS181	DIODE		
D15			MI407	DIODE		
D16			MI308	DIODE		
D17 ,18			1SS226	DIODE		
D19			DSA3A1	DIODE		
IC1			BU4094BF	IC		
IC2			LA5010M	IC(LOW SATURATION REGULATOR)		
IC5			KCD04	IC(FM IF)		
IC6			KCD05	IC(AM IF)		
IC7			KCAC4	IC(MIC AMP)		
IC8			KCB11	IC(DRIVE)		
IC9			KCC04	IC(APC)		
IC10			S-AV17	IC(POWER MODULE FOR 144MHZ)		
IC11			KCH05	IC(144 PLL-VCO)		
Q1			3SK184(S)	FET		
Q2			3SK131(V12)	FET		
Q3			2SC2714(Y)	TRANSISTOR		
Q4			DTA114YK	DIGITAL TRANSISTOR		
Q5 ,6			DTC123JK	DIGITAL TRANSISTOR		
Q7			DTC143EK	DIGITAL TRANSISTOR		
Q10			2SA1362(Y)	TRANSISTOR		
Q11			2SB1119S	TRANSISTOR		
Q12			DTC144WK	DIGITAL TRANSISTOR		
Q13 ,14			2SC2712(Y)	TRANSISTOR		
Q15 -17			DTC144EK	DIGITAL TRANSISTOR		
Q18			2SD1757K	TRANSISTOR		
Q19			2SK208(Y)	FET		
Q20			2SC2714(Y)	TRANSISTOR		
Q21			2SC2712(Y)	TRANSISTOR		
Q22			FMG1	TRANSISTOR		
Q23			2SD1902R	TRANSISTOR		
Q24			2SJ106(GR)	FET		
430/440M TX-RX UNIT (X57-359X-XX) 0-12:K, P 0-22:M, M2 2-72:E						
			A10-1316-01	CHASSIS		
			B42-2437-04	LABEL(S/NO)		
C1			CC73FCH1H030C	CHIP C 3PF C		
C2 -4			CK73FB1H102K	CHIP C 1000PF K		
C5			CC73FCH1H1R5C	CHIP C 1.5PF C		
C6			CC73FCH1H390J	CHIP C 39PF J		
C7			CK73FB1H102K	CHIP C 1000PF K		
C8			CK73FB1H102K	CHIP C 1000PF K		
C9			CC73FCH1H030C	CHIP C 3.0PF C	KP	
C9			CC73FCH1H010C	CHIP C 1.0PF C	EXM2	
C10			CC73FCH1H390J	CHIP C 39PF J		

L:Scandinavia K:USA P:Canada
Y:PX(Far East, Hawaii) T:England E:Europe
Y:AAFES(Europe) X:Australia M:Other Areas

⚠ indicates safety critical components.

PARTS LIST

* New Parts
Parts without Parts No. are not supplied.
* Screws not mentioned can not be supplied.
Telephone Parts No. wonderful not guaranteed.

430/440M TX-RX UNIT (X57-359X-XX)

Ref. No. 参照番号	Address 位置	New Parts 新	Parts No. 部品番号	Description 部品名／規格			Destination 仕向	Remarks 備考
C11			CK73FB1H102K	CHIP C	1000PF	K		
C12			CK73FB1H102K	CHIP C	1000PF	K		
C13 ,14			CK73FB1H102K	CHIP C	1000PF	K		
C15			CC73FCH1H050C	CHIP C	5PF	C		
C16 ,17			CK73FB1H102K	CHIP C	1000PF	K		
C18			CC73FCH1H060D	CHIP C	6PF	D		
C19 ,20			CK73FB1H102K	CHIP C	1000PF	K		
C21			CC73FCH1H560J	CHIP C	56PF	J	KP	
C21, 22			CC73FCH1H330J	CHIP C	33PF	J	EMM2	
C22			CC73FCH1H180J	CHIP C	18PF	J	KP	
C23			CK73FB1H102K	CHIP C	1000PF	K		
C24			CE04NW1C470M	ELECTRO	47UF	16WV		
C25			CK73FB1H102K	CHIP C	1000PF	K		
C26			CK73FF1C105Z	CHIP C	1.0UF	Z		
C27			C92-0003-05	CHIP TAN	0.47UF	25WV		
C28 ,29			CK73FF1C105Z	CHIP C	1.0UF	Z		
C30			CK73FB1H102K	CHIP C	1000PF	K		
C31			CK73FB1H102K	CHIP C	1000PF	K		
C32			CE04NW1C470M	ELECTRO	47UF	16WV		
C33			C92-0504-05	CHIP TAN	0.68UF	20WV		
C34			CE04NW1C470M	ELECTRO	47UF	16WV		
C35			CK73FB1H102K	CHIP C	1000PF	K		
C36			CE04NW1C470M	ELECTRO	47UF	16WV		
C37			CK73FB1H102K	CHIP C	1000PF	K		
C38			CK73FB1H822K	CHIP C	8200PF	K		
C39			CK73FB1H102K	CHIP C	1000PF	K		
C40			CK73FF1C105Z	CHIP C	1.0UF	Z		
C41 ,42			CC73FUJ1H180J	CHIP C	18PF	J		
C43			CK73FB1H102K	CHIP C	1000PF	K		
C44			CC73FCH1H060D	CHIP C	6PF	D		
C45			CK73FB1H102K	CHIP C	1000PF	K		
C46			CC73FCH1H150J	CHIP C	15PF	J		
C47			CK73FB1H102K	CHIP C	1000PF	K		
C48			CE04NW1C101M	ELECTRO	100UF	16WV		
C49			CK73FB1H102K	CHIP C	1000PF	K		
C50		*	CE04NW1A330M	ELECTRO	33UF	10WV		
C51 ,52			CK73FB1H102K	CHIP C	1000PF	K		
C53			CE04NW1C101M	ELECTRO	100UF	16WV		
C54 -58			CK73FB1H102K	CHIP C	1000PF	K		
C60			CE04NW1C220M	ELECTRO	22UF	16WV		
C62			CK73FB1H102K	CHIP C	1000PF	K		
C64 ,65			CK73FB1H102K	CHIP C	1000PF	K		
C66			CM73F2H050D	CHIP C	5.0PF	D	KP	
C66			CM73F2H060D	CHIP C	6.0PF	D	EMM2	
C67			CC73FCH1H070D	CHIP C	7PF	D		
C68			CC45SL2H150J	CERAMIC	15PF	J		
C69			CC45SL2H220J	CERAMIC	22PF	J		
C70			CC45SL2H220J	CERAMIC	22PF	J		
C71			CC73FCH1H0R5C	CHIP C	0.5PF	C		
C72			CC73FCH1H020C	CHIP C	2.0PF	C		
C73			CC45SL2H080D	CERAMIC	8.0PF	D		
C74			CC45SL2H100D	CERAMIC	10PF	D		
C75			CC73FCH1H0R5C	CHIP C	0.5PF	C		
C76			CC73FCH1H020C	CHIP C	2.0PF	C		
C77			CM73F2H060D	CHIP C	6.0PF	D		

L:Scandinavia K:USA P:Canada
Y:PX(Far East, Hawaii) T:England E:Europe
Y:MFES(Europe) X:Australia M:Other Areas

⚠ indicates safety critical components.

PARTS LIST

* New Parts
Parts without Parts No. are not supplied.
Les articles non mentionnés dans le Parts No. ne sont pas fournis
Teile ohne Parts No. werden nicht geliefert

430/440M TX-RX UNIT (X57-359X-XX)

Ref. No. 参照番号	Address 位置	New Parts 新	Parts No. 部品番号	Description 部品名／規格			Destination 仕向	Remarks 備考
C76 -80			CK73FB1H102K	CHIP C	1000PF	K		
C81			C90-2092-05	ELECTRO	1800UF	16WV		
C82 -85			CC73FSL1H101J	CHIP C	100PF	J		
C86			CK73FB1H102K	CHIP C	1000PF	K		
C87			CK73FB1H333K	CHIP C	0.033UF	K		
C88			CE04NW1A221M	ELECTRO	220UF	10WV		
C89 -91			CK73FB1H102K	CHIP C	1000PF	K		
C92			CK73FB1H471K	CHIP C	470PF	K		
C93			CE04NW1C470M	ELECTRO	47UF	16WV		
C94			CC73FCH1H030C	CHIP C	3PF	C		
C96			CK73FB1H102K	CHIP C	1000PF	K		
C97			CK73FB1E104K	CHIP C	0.10UF	K		
C98			CC73FCH1H040C	CHIP C	4PF	C		
C99			CC73FCH1H020C	CHIP C	2.0PF	C		
C100			CC73FCH1H070D	CHIP C	7PF	D		
C102			CE04NW1C100M	ELECTRO	10UF	16WV		
C103,104			CK73FB1H102K	CHIP C	1000PF	K		
C105-110			CC73FSL1H101J	CHIP C	100PF	J		
C111			CK73FB1H103K	CHIP C	0.010UF	K		
C112			CK73FB1H102K	CHIP C	1000PF	K		
C113			CC73FCH1H020C	CHIP C	2.0PF	C		
C114			CK73FB1E223K	CHIP C	0.022UF	K		
C115			CK73FB1H102K	CHIP C	1000PF	K		
C118			CC73FCH1H150J	CHIP C	15PF	J		
TC1 ,2			C05-0346-05	TRIM CAP	6PF			
TC3			C05-0371-05	TRIM CAP	10PF			
			E22-0672-04	TERMINAL BOARD(-)				
			E22-0673-04	TERMINAL BOARD(+)				
			E30-3009-05	ANT CABLE			KPMM2	
			E30-3010-05	ANT CABLE			E	
CN1 ,2			E40-5461-05	PIN ASSY(12P)				
J1			E11-0442-05	PHONE JACK				
TP1			E04-0154-05	RF COAXIAL CABLE RECEPTACLE				
			F10-1444-03	SHIELDING PLATE				
			F10-1446-04	SHIELDING PLATE				
			F10-1477-24	SHIELDING PLATE				
			F10-2012-04	SHIELDING CASE(VCO-PLL)				
			G02-0599-04	FLAT SPRING(DB TR)				
			G02-0600-14	FLAT SPRING(THERMAL SW)				
			G02-0704-04	EARTH SPRING				
			G02-0705-04	EARTH SPRING				
			G09-0426-05	SPRING(DC CORD)				
			G11-0655-04	CUSHION(CN1,CN2)				
			G11-0656-14	CONDUCTIVE RUBBER(MCP)				
			G11-0660-04	CUSHION(VCO)				
			G11-0661-04	INSULATION SHEET(DB TR)				
			G13-0841-04	CUSHION(12.8MHZ XTAL)				
			G13-1319-04	CUSHION(VCO)				
			G13-1351-04	CUSHION(CN1,CN2)				
			G53-0508-04	CUSHION				
			J42-0471-04	DC CORD BUSHING				
CD1			L79-1013-05	FILTER				

L:Scandinavia K:USA P:Canada
Y:PX(Far East, Hawaii) T:England E:Europe
Y:AAFES(Europe) X:Australia M:Other Areas

⚠ indicates safety critical components.

PARTS LIST

※ New Parts
Parts without Parts No. are not supplied.
Les articles non mentionnés dans le Parts No. ne sont pas fournis
Teile ohne Parts No. werden nicht geliefert.

430/440M TX-RX UNIT (X57-359X-XX)

Ref. No. 参照番号	Address 位置	New Parts 新	Parts No. 部品番号	Description 部品名／規格	Destination 仕向	Remarks 備考
CF1			L72-0372-05	CERAMIC FILTER(CFWM455F)		
L1			L40-1872-80	SMALL FIXED INDUCTOR(18NH)		
L2			L40-1572-48	SMALL FIXED INDUCTOR(15NH)		
L3			L79-1016-05	HERICAL BLOCK		
L4			L79-1017-05	HERICAK BLOCK	EMM2	
L4			L79-1018-05	HERICAL BLOCK	KP	
L5			L40-2772-48	SMALL FIXED INDUCTOR(27NH)	KP	
L5			L40-3372-48	SMALL FIXED INDUCTOR(33NH)	EMM2	
L6			L40-2272-48	SMALL FIXED INDUCTOR(22NH)		
L7			L34-4250-05	COIL		
L8			L40-2272-48	SMALL FIXED INDUCTOR(22NH)		
L9			L34-1238-05	COIL(9.5T)		
L10			L34-1186-05	COIL(2.5T)		
L11			L34-1032-05	COIL(3.5T)		
L12			L34-1226-05	COIL(1.5T)		
L13			L34-1238-05	COIL(9.5T)		
L14			L34-1226-05	COIL(1.5T)		
L15			L40-1672-48	SMALL FIXED INDUCTOR(16NH)		
L16			L40-1001-19	SMALL FIXED INDUCTOR(10UH)		
X1			L77-1445-05	CRYSTAL RESONATOR(21.145MHZ)		
X2			L77-1405-05	CRYSTAL RESONATOR(12.8MHZ)		
XF1			L71-0411-05	MCF(21.6MHZ)		
			N09-2077-05	SCREW(MODULE)		
			N87-2606-46	BRAZIER HEAD TAPTITE SCREW		
			N88-2606-46	FLAT HEAD TAPTITE SCREW		
R2			RK73FB2A104J	CHIP R 100K J 1/10W		
R3			RK73FB2A333J	CHIP R 33K J 1/10W		
R4 ,5			RK73FB2A101J	CHIP R 100 J 1/10W		
R6			RK73FB2A470J	CHIP R 47 J 1/10W		
R7			RK73FB2A220J	CHIP R 22 J 1/10W		
R8			RK73FB2A471J	CHIP R 470 J 1/10W		
R10			RK73FB2A223J	CHIP R 22K J 1/10W		
R11			RK73FB2A102J	CHIP R 1.0K J 1/10W		
R14 ,15			RK73FB2A102J	CHIP R 1.0K J 1/10W		
R16			RK73FB2A221J	CHIP R 220 J 1/10W		
R18			RK73FB2A222J	CHIP R 2.2K J 1/10W		
R19			RK73FB2A470J	CHIP R 47 J 1/10W		
R20			R92-0670-05	CHIP R 0 OHM		
R21			RK73FB2A122J	CHIP R 1.2K J 1/10W		
R22			RK73FB2A334J	CHIP R 330K J 1/10W		
R24			RK73FB2A102J	CHIP R 1.0K J 1/10W		
R25			RK73FB2A471J	CHIP R 470 J 1/10W		
R26			RK73FB2A473J	CHIP R 47K J 1/10W		
R27			RK73FB2A223J	CHIP R 22K J 1/10W		
R28			RK73FB2A182J	CHIP R 1.8K J 1/10W		
R29 -31			RK73FB2A103J	CHIP R 10K J 1/10W		
R32			RK73FB2A182J	CHIP R 1.8K J 1/10W		
R33 -35			RK73FB2A473J	CHIP R 47K J 1/10W		
R36			RK73FB2A154J	CHIP R 150K J 1/10W		
R37			RK73FB2A273J	CHIP R 27K J 1/10W		
R38			RK73FB2A152J	CHIP R 1.5K J 1/10W		
R40			RK73FB2A221J	CHIP R 220 J 1/10W		
R42			R92-0670-05	CHIP R 0 OHM		
R43			RK73FB2A471J	CHIP R 470 J 1/10W		

L:Scandinavia K:USA P:Canada
Y:PX(Far East, Hawaii) T:England E:Europe
Y:AAFES(Europe) X:Australia M:Other Areas

⚠ indicates safety critical components.

PARTS LIST

* New Parts
Parts without Parts No. are not supplied.
Les articles non mentionnés dans la Parts No. ne sont pas fournis.
Teile ohne Parts No. werden nicht geliefert.

430/440M TX-RX UNIT (X57-359X-XX)

Ref. No. 参照番号	Address 位置	New Parts 新	Parts No. 部品番号	Description 部品名／規格	Destination 仕向	Remarks 備考
R44			RK73FB2A103J	CHIP R 10K J 1/10W		
R45 ,46			RK73FB2A222J	CHIP R 2.2K J 1/10W		
R47			RK73EB2B220J	CHIP R 22 J 1/8W		
R48			R92-0670-05	CHIP R 0 OHM		
R49			RK73FB2A102J	CHIP R 1.0K J 1/10W		
R51			RK73FB2A562J	CHIP R 5.6K J 1/10W		
R52			RK73FB2A104J	CHIP R 100K J 1/10W		
R53			R92-0685-05	CHIP R 22 J 1/2W		
R55			R92-0670-05	CHIP R 0 OHM		
R58			R92-0679-05	CHIP R 0 OHM		
R59			R92-1214-05	CHIP R 120 J 1/2W		
R60 ,61			RK73FB2A103J	CHIP R 10K J 1/10W		
R62			RK73FB2A221J	CHIP R 220 J 1/10W		
R63			RK73FB2A473J	CHIP R 47K J 1/10W		
R64			RK73FB2A104J	CHIP R 100K J 1/10W		
R65			RK73FB2A472J	CHIP R 4.7K J 1/10W		
R66			RK73FB2A473J	CHIP R 47K J 1/10W		
R67 ,68			RK73FB2A103J	CHIP R 10K J 1/10W		
VR1			R12-6429-05	TRIMMING POT.100K		
VR2			R12-6427-05	TRIM POT. 47K		
VR3 ,4			R12-6423-05	TRIM POT. 10K		
TS1			S59-0444-05	THERMAL SWITCH(90°C)		
D1			HSK277	DIODE		
D2			1SV126	DIODE		
D3			1SS184	DIODE		
D4			MA862	DIODE		
D5			1SS181	DIODE		
D6			1SS184	DIODE		
D7			1SS184	DIODE		
D8			MI407	DIODE		
D9			MI308	DIODE		
D10 ,11			MA716	DIODE		
D12			DSA3A1	DIODE		
D13			1SS184	DIODE		
D14			MA716	DIODE		
D15			MA862	DIODE		
IC1			KCD04	IC(FM IF)		
IC2			KCA04	IC(MIC AMP)		
IC3			BU4094BF	IC		
IC4			LA5010M	IC(LOW SATURATION REGULATOR)		
IC5			KCC04	IC(APC)		
IC6			KCB14	IC(DRIVE)		
IC7			M57788M	IC(POWER MODULE/ 430-450MHZ)		
IC8			KCB12	IC(300M FRONT)		
IC9			KCB13	IC(800M FRONT)		
IC10			KCH07	IC(VCO-PLL/430)		
Q1			3SK184(S)	FET		
Q2			2SK582	FET		
Q3			3SK184(S)	FET		
Q4			DTC114EK	DIGITAL TRANSISTOR		
Q5			2SC2714(Y)	TRANSISTOR		
Q6 ,7			PMAS	TRANSISTOR		
Q8			2SA1362(Y)	TRANSISTOR		

L:Scandinavia K:USA P:Canada
Y:PX(Far East, Hawaii) T:England E:Europe
Y:AAFES(Europe) X:Australia M:Other Areas

⚠ indicates safety critical components.

PARTS LIST

* New Parts
Parts without Parts No. are not supplied.
Les articles non mentionnés dans le Parts No. ne sont pas fournis.
Teile ohne Parts No. werden nicht geliefert.

430/440M TX-RX UNIT (X57-359X-XX)
1200M TX-RX UNIT (X57-3600-11)

Ref. No. 参照番号	Address 位置	New Parts 新	Parts No. 部品番号	Description 部品名／規格			Destination 仕向	Remarks 備考
Q9			DTC144WK	DIGITAL TRANSISTOR				
Q10 ,11			2SC2712(Y)	TRANSISTOR				
Q12			2SB1119S	TRANSISTOR				
Q13 -15			DTC144EK	DIGITAL TRANSISTOR				
Q16			2SD1757K	TRANSISTOR				
Q17			2SC2712(Y)	TRANSISTOR				
Q18			2SC3103	TRANSISTOR				
Q19			FMG1	TRANSISTOR				
Q20			2SD1760(Q)	TRANSISTOR				
Q21			2SJ106(GR)	FET				
1200M TX-RX UNIT (X57-3600-11)								
			A10-1316-01	CHASSIS				
			B42-2437-04	LABEL(S/NO)				
C1			CC73FCH1H220J	CHIP C	22PF	J		
C2 -5			CK73FB1H471K	CHIP C	470PF	K		
C7			CC73FCH1H100D	CHIP C	10PF	D		
C8			CC73FSL1H101J	CHIP C	100PF	J		
C9			CC73FCH1H1R5B	CHIP C	1.5PF	B		
C10 ,11			CC73FCH1H470J	CHIP C	47PF	J		
C12			CK73FB1E103K	CHIP C	0.01UF	K		
C13			CC73FCH1H1R5B	CHIP C	1.5PF	B		
C14			CC73FSL1H101J	CHIP C	100PF	J		
C15			CK73FB1H471K	CHIP C	470PF	K		
C17			CC73FSL1H101J	CHIP C	100PF	J		
C18			CC73FCH1H1R5B	CHIP C	1.5PF	B		
C19			CE04NW1C470M	ELECTRO	47UF	16WV		
C21 ,22			CK73FB1H471K	CHIP C	470PF	K		
C23			CC73FCH1H030C	CHIP C	3PF	C		
C24			CC73FCH1H1R5C	CHIP C	1.5PF	C		
C25			CK73FB1H102K	CHIP C	1000PF	K		
C26			CK73FB1H471K	CHIP C	470PF	K		
C27			CK73FB1E223K	CHIP C	0.022UF	K		
C28			CC73FCH1H080D	CHIP C	8PF	D		
C29			CK73FB1E103K	CHIP C	0.01UF	K		
C30			CC73FCH1H030C	CHIP C	3PF	C		
C31			CC73FSL1H101J	CHIP C	100PF	J		
C32			CC73FCH1H030C	CHIP C	3PF	C		
C33			CK73FB1H471K	CHIP C	470PF	K		
C34			CK73FB1H472K	CHIP C	4700PF	K		
C35			CK73FB1H102K	CHIP C	1000PF	K		
C36			CC73FCH1H150J	CHIP C	15PF	J		
C37			CC73FCH1H220J	CHIP C	22PF	J		
C38 -41			CK73FB1E103K	CHIP C	0.01UF	K		
C42			CE04NW1C470M	ELECTRO	47UF	16WV		
C43 ,44			CK73EF1C105Z	CHIP C	1.0UF	Z		
C45			C92-0002-05	CHIP TAN	0.22UF	35WV		
C46			CK73FB1E104K	CHIP C	0.1UF	K		
C47			CK73FB1H471K	CHIP C	470PF	K		
C48			C92-0504-05	CHIP TAN	0.68UF	20WV		
C49			C92-0004-05	ELECTRO	1.0UF	16WV		
C50			CK73FB1E223K	CHIP C	0.022UF	K		
C51			CK73EF1C105Z	CHIP C	1.0UF	Z		
C52			CC73FCH1H030C	CHIP C	3PF	C		

L:Scandinavia K:USA P:Canada
Y:PX(Far East, Hawaii) T:England E:Europe
Y:AAFES(Europe) X:Australia M:Other Areas

⚠ ndicates safety critical components

PARTS LIST

x New Parts
Parts without Parts No. are not supplied.
Les articles non mentionnés dans le Parts No. ne sont pas fournis
Teile ohne Parts No. werden nicht geliefert.

1200M TX-RX UNIT (X57-3600-11)

Ref. No. 参照番号	Address 位置	New Parts 新	Parts No. 部品番号	Description 部品名／規格			Destination 仕向	Remarks 備考
C53			CK73FB1E473K	CHIP C	0.047UF	K		
C54			CE04NW1C470M	ELECTRO	47UF	16WV		
C55			CK73EF1C105Z	CHIP C	1.0UF	Z		
C56			CK73FB1E223K	CHIP C	0.022UF	K		
C57			CK73FB1H471K	CHIP C	470PF	K		
C58 ,59			CE04NW1C101M	ELECTRO	100UF	16WV		
C60			CK73FB1H471K	CHIP C	470PF	K		
C61		*	CE04NW1A330M	ELECTRO	33UF	10WV		
C62 ,63			CK73FB1E103K	CHIP C	0.01UF	K		
C64			CE04NW1C101M	ELECTRO	100UF	16WV		
C65			CC73GCH1H030C	CHIP C	3PF	C		
C66			CC73GCH1H101J	CHIP C	100PF	J		
C67 ,68			CC73GCH1H020C	CHIP C	2.0PF	C		
C69			CC73GCH1H101J	CHIP C	100PF	J		
C70			CC73GCH1H050C	CHIP C	5PF	C		
C71			CK73EF1C105Z	CHIP C	1.0UF	Z		
C72			CE04NW1E100M	ELECTRO	10UF	25WV		
C73 ,74			CK73FB1H471K	CHIP C	470PF	K		
C75			CK73GB1H471K	CHIP C	470PF	K		
C76			CK73FB1H471K	CHIP C	470PF	K		
C77			CK73FB1E103K	CHIP C	0.01UF	K		
C78 -80			CK73FB1H471K	CHIP C	470PF	K		
C81			CK73EF1C105Z	CHIP C	1.0UF	Z		
C82 -83			CK73FB1H471K	CHIP C	470PF	K		
C84			CK73FB1H471K	CHIP C	470PF	K		
C85			CE04NW1E100M	ELECTRO	10UF	25WV		
C86			CK73EF1C105Z	CHIP C	1.0UF	Z		
C87 ,88			CK73GB1H471K	CHIP C	470PF	K		
C89 ,90			CK73FB1H471K	CHIP C	470PF	K		
C91			CE04NW1C470M	ELECTRO	47UF	16WV		
C92			CC73FCH1H470J	CHIP C	47PF	J		
C93 ,94			CK73FB1H471K	CHIP C	470PF	K		
C95			CC73FCH1H010C	CHIP C	1PF	C		
C96			CC73FCH1H100D	CHIP C	10PF	D		
C97			CK73FB1H471K	CHIP C	470PF	K		
C98			CM73F2H470J	CHIP C	47PF	J		
C99			CC73FSL1H101J	CHIP C	100PF	J		
C100			CK73FB1E103K	CHIP C	0.01UF	K		
C101			CC73FCH1H080D	CHIP C	8PF	D		
C102-104			CK73FB1H471K	CHIP C	470PF	K		
C105		*	CC73FCH1HR75B	CHIP C	0.75PF	B		
C106			CK73FB1H471K	CHIP C	470PF	K		
C107			CC73FSL1H101J	CHIP C	100PF	J		
C108-110			CK73FB1H471K	CHIP C	470PF	K		
C111			CC73FSL1H101J	CHIP C	100PF	J		
C112			CK73FB1H471K	CHIP C	470PF	K		
C113			CK73FB1H102K	CHIP C	1000PF	K		
C114-116			CK73FB1H471K	CHIP C	470PF	K		
C117			CK73GB1H102K	CHIP C	1000PF	K		
C118			CK73FB1E103K	CHIP C	0.01UF	K		
C119			CC73FSL1H101J	CHIP C	100PF	J		
C120			CC73FUJ1H221J	CHIP C	220PF	J		
C123-125			CK73FB1H471K	CHIP C	470PF	K		
C126-130			CK73FB1H471K	CHIP C	470PF	K		
C131			CK73GB1H103K	CHIP C	0.01UF	K		

L:Scandinavia K:USA P:Canada
Y:PX(Far East, Hawaii) T:England E:Europe
Y:AAFES(Europe) X:Australia M:Other Areas

⚠ indicates safety critical components

PARTS LIST

* New Parts
Parts without Parts No. are not supplied.
Les articles non mentionnes dans le Parts No. ne sont pas fournis.
Teile ohne Parts No. werden nicht geliefert.

1200M TX-RX UNIT (X57-3600-11)

Ref. No. 参照番号	Address 位置	New Parts 新	Parts No. 部品番号	Description 部品名／規格	Destination 仕向	Remarks 備考
C132			CK73GB1H471K	CHIP C 470PF K		
C133			CK73FB1E103K	CHIP C 0.01UF K		
C134-137			CK73FB1H471K	CHIP C 470PF K		
C138			CE04NW0J47GM	ELECTRO 47UF 6.3WV		
C139			CC73FSL1H101J	CHIP C 100PF J		
C140			CK73FB1E104K	CHIP C 0.10UF K		
C141,142			CK73FB1H471K	CHIP C 470PF K		
C144,145			CC73FSL1H101J	CHIP C 100PF J		
C147-156			CC73GCH1H101J	CHIP C 100PF J		
C157			CK73GB1H102K	CHIP C 1000PF K		
C158			CK73FB1H102K	CHIP C 1000PF K		
C159			CC73FSL1H101J	CHIP C 100PF J		
			E22-0672-04	TERMINAL BOARD(-)		
			E22-0673-04	TERMINAL BOARD(+)		
			E23-0467-05	TERMINAL		
			E30-3011-05	ANT. CABLE		
CN1 ,2			E40-5461-05	PIN CONNECTOR(12P)		
J1			E11-0442-05	PHONE JACK		
			F10-1444-03	SHIELDING COVER		
			F10-1445-04	SHIELDING(VCO)		
			F10-1446-04	SHIELDING(MODULE)		
			F10-1457-14	SHIELDING CASE		
			F10-1475-04	SHIELDING COVER(MODULE)		
			G02-0599-04	FLAT SPRING(IC)		
			G02-0706-04	FLAT SPRING(ANT)		
			G11-0654-04	SHEET(VCO 30X20)		
			G11-0655-04	SHEET(CN1,CN2 55X8)		
			G11-0660-04	SHEET(VCO 25X10)		
			G11-0661-04	INSULATION SHEESN		
			G13-1319-04	FORMED PLATE		
			G53-0508-04	NON-WEVERN FABRIC		
			J42-0471-04	DC CORD BUSHING		
CD1			L79-1013-05	FILTER		
CF1			L72-0366-05	CERAMIC FILTER		
L1 ,2		*	L79-1015-05	FILTER		
L4		*	L34-4259-05	COIL		
L5			L71-0280-05	MCP		
L6			L34-2034-05	COIL(VXO)		
L7		*	L40-3962-19	SMALL FIXED INDUCTOR(0.39UH)		
L8			L40-5662-19	SMALL FIXED INDUCTOR(0.56UH)		
X1			L77-1375-05	CRYSTAL RESONATOR(59.245MHZ)		
X2			L77-1376-25	TCXO(12.8MHZ)		
			N09-2077-05	SCREW		
			N87-2606-46	BRAZIER HEAD TAPTITE SCREW		
			N88-2606-46	FLAT HEAD TAPTITE SCREW		
R1 ,2			RK73FB2A222J	CHIP R 2.2K J 1/10W		
R4			RK73FB2A473J	CHIP R 47K J 1/10W		
R5			RK73GB1J473J	CHIP R 47K J 1/16W		
R6			RK73FB2A560J	CHIP R 56 J 1/10W		
R7			RK73FB2A221J	CHIP R 220 J 1/10W		
R9			RK73FB2A472J	CHIP R 4.7K J 1/10W		
R10			RK73FB2A153J	CHIP R 15K J 1/10W		

L:Scandinavia K:USA P:Canada
Y:PX(Far East, Hawaii) T:England E:Europe
Y:AAFES(Europe) X:Australia M:Other Areas

⚠ indicates safety critica components.

PARTS LIST

* New Parts
Parts without Parts No. are not supplied.
Les articles non mentionnés dans le Parts No. ne sont pas fournis
Teile ohne Parts No. werden nicht geliefert.

1200M TX-RX UNIT (X57-3600-11)

Ref. No. 参照番号	Address 位置	New Parts 新	Parts No. 部品番号	Description 部品名／規格	Destination 仕向	Remarks 備考
R11			RK73FB2A471J	CHIP R 470 J 1/10W		
R13			R92-0670-05	CHIP R 0 OHM		
R14			RK73GB1J180J	CHIP R 18 J 1/16W		
R15			RK73FB2A101J	CHIP R 100 J 1/10W		
R16			RK73FB2A331J	CHIP R 330 J 1/10W		
R17			RK73FB2A100J	CHIP R 10 J 1/10W		
R19			RK73FB2A151J	CHIP R 150 J 1/10W		
R20			RK73FB2A101J	CHIP R 100 J 1/10W		
R21			R92-0670-05	CHIP R 0 OHM		
R22			RK73FB2A331J	CHIP R 330 J 1/10W		
R23			RK73FB2A224J	CHIP R 220K J 1/10W		
R24			RK73FB2A561J	CHIP R 560 J 1/10W		
R25			RK73FB2A103J	CHIP R 10K J 1/10W		
R26			RK73FB2A473J	CHIP R 47K J 1/10W		
R27			RK73FB2A471J	CHIP R 470 J 1/10W		
R29			R92-0670-05	CHIP R 0 OHM		
R30			RK73FB2A221J	CHIP R 220 J 1/10W		
R31			RK73FB2A472J	CHIP R 4.7K J 1/10W		
R32			RK73FB2A222J	CHIP R 2.2K J 1/10W		
R33			RK73FB2A334J	CHIP R 330K J 1/10W		
R34			RK73FB2A223J	CHIP R 22K J 1/10W		
R35			RK73FB2A182J	CHIP R 1.8K J 1/10W		
R36 ,37			RK73FB2A103J	CHIP R 10K J 1/10W		
R38			RK73FB2A102J	CHIP R 1.0K J 1/10W		
R39 -41			RK73FB2A103J	CHIP R 10K J 1/10W		
R42			RK73FB2A474J	CHIP R 470K J 1/10W		
R43 -45			RK73GB1J472J	CHIP R 4.7K J 1/16W		
R46			RK73FB2A684J	CHIP R 680K J 1/10W		
R47			RK73FB2A823J	CHIP R 82K J 1/10W		
R48			RK73FB2A331J	CHIP R 330 J 1/10W		
R49			RK73FB2A102J	CHIP R 1.0K J 1/10W		
R50			RK73FB2A472J	CHIP R 4.7K J 1/10W		
R51			RK73FB2A102J	CHIP R 1.0K J 1/10W		
R52			RK73FB2A560J	CHIP R 56 J 1/10W		
R53			RK73GB1J271J	CHIP R 270 J 1/16W		
R54			RK73GB1J103J	CHIP R 10K J 1/16W		
R55			RK73GB1J222J	CHIP R 2.2K J 1/16W		
R56			RK73GB1J471J	CHIP R 470 J 1/16W		
R57			RK73FB2A100J	CHIP R 10 J 1/10W		
R58			RK73FB2A152J	CHIP R 1.5K J 1/10W		
R59			RK73FB2A683J	CHIP R 68K J 1/10W		
R60			R92-0670-05	CHIP R 0 OHM		
R61 ,62			RK73FB2A220J	CHIP R 22 J 1/10W		
R63			RK73GB1J472J	CHIP R 4.7K J 1/16W		
R64			RK73GB1J222J	CHIP R 2.2K J 1/16W		
R65			RK73GB1J471J	CHIP R 470 J 1/16W		
R66 ,67			RK73FB2A180J	CHIP R 18 J 1/10W		
R68			R92-0670-05	CHIP R 0 OHM		
R69			RK73FB2A333J	CHIP R 33K J 1/10W		
R70			R92-1201-05	SILID 220 1/2W		
R71			R92-0670-05	CHIP R 0 OHM		
R72		*	R92-1264-05	FIXED RESISTOR		
R73			RK73FB2A472J	CHIP R 4.7K J 1/10W		
R74			R92-0700-05	CHIP R 18C 1/2W		
R75			RK73FB2A470J	CHIP R 47 J 1/10W		

L:Scandinavia K:USA P:Canada
Y:PX(Far East, Hawaii) T:England E:Europe
Y:AAFES(Europe) X:Australia M:Other Areas

⚠ indicates safety critical components

PARTS LIST

* New Parts
Parts without Parts No. are not supplied.
Les articles non mentionnés dans le Parts No. ne sont pas fournis.
Teile ohne Parts No. werden nicht geliefert.

1200M TX-RX UNIT (X57-3600-11)

Ref. No. 参照番号	Address 位置	New Parts 新	Parts No. 部品番号	Description 部品名／規格	Destination 仕向	Remarks 備考
R76			RK73FB2A222J	CHIP R 2.2K J 1/10W		
R77			R92-0670-05	CHIP R 0 0HM		
R78			RK73GB1J271J	CHIP R 270 J 1/16W		
R79 ,80			RK73FB2A103J	CHIP R 10K J 1/10W		
R81			RK73FB2A471J	CHIP R 470 J 1/10W		
R82			R92-0670-05	CHIP R 0 0HM		
R83			RK73FB2A4R7J	CHIP R 4.7 J 1/10W		
VR1			R12-6429-05	TRIMMING POT.100K		
VR2			R12-6421-05	TRIM POT. 4.7K		
VR3			R12-6427-05	TRIM POT. 47K		
VR4			R12-6423-05	TRIM POT. 10K		
VR5			R12-6427-05	TRIM POT. 47K		
D1			MA862	DIODE		
D3			MA716	DIODE		
D4			1SS193	DIODE		
D5			02CZ6.2(X,Y)	DIODE		
D6			1SS193	DIODE		
D7			1SS187	DIODE		
D8			02CZ12(X,Y)	DIODE		
D9			HSX151	DIODE		
D10 -13			MI808	DIODE		
D14			DSA3A1	DIODE		
D15			02CZ3.6(Y,Z)	DIODE		
D17			DAP202U	DIODE		
D19			MI808	DIODE		
IC2			XCB04	IC(IF)		
IC3		*	KCX03	IC(ALT)		
IC4			KCA04	IC(MIC)		
IC5			BU4094BF	IC		
IC6			LA5009M	IC		
IC7			KCB09	IC(PRE DRIVE)		
IC8			KCB10	IC(DRIVE)		
IC9			KCC04	IC(APC)		
IC10			M67711	IC(POWER MODULE/ 1.24-1.38HZ)		
IC11			KCH03	IC(PLL)		
IC12			NJM78L05UA	IC		
IC12			RC78L05UA	IC		
Q1			MGF1502	IC		
Q2			2SC4095(R47,6)	TRANSISTOR		
Q3			3SK184(S)	FET		
Q6			2SC3356	TRANSISTOR		
Q7			2SC3120	TRANSISTOR		
Q8			2SA1362(Y)	TRANSISTOR		
Q9			2SB1302S	TRANSISTOR		
Q10			DTC144WK	DIGITAL TRANSISTOR		
Q11			FMW1	TRANSISTOR		
Q12 ,13			2SC2712(Y)	TRANSISTOR		
Q15 -17			DTC144EU	DIGITAL TRANSISTOR		
Q18			2SD1757(K)	TRANSISTOR		
Q19			2SA1362(Y)	TRANSISTOR		
Q20			DTC124EK	DIGITAL TRANSISTOR		
Q21 ,22			2SC4226(R23,24)	TRANSISTOR		
Q23			2SC2712(Y)	TRANSISTOR		
Q24			2SD1760(Q)	TRANSISTOR		

L:Scandinavia K:USA P:Canada
Y:PX(Far East, Hawaii) T:England E:Europe
Y:AAFES(Europe) X:Australia M:Other Areas

⚠ indicates safety critical components.

PARTS LIST

※ New Parts
Parts without Parts No. are not supplied.
Les articles non mentionnés dans le Parts No. ne sont pas fournis.
Teile ohne Parts No. werden nicht geliefert.

1200M TX-RX UNIT (X57-3600-11)
28M TX-RX UNIT (X57-3790-01)

Ref. No. 参照番号	Address 位置	New Parts 新	Parts No. 部品番号	Description 部品名/規格			Destination 仕向	Remarks 備考
Q25			PMG1	TRANSISTOR				
Q26			2SJ106(GR)	FET				
Q28			DTC114EK	DIGITAL TRANSISTOR				
28M TX-RX UNIT (X57-3790-01)								
			A10-1325-01	CHASSIS				
			B42-2437-04	LABEL(S/NO,UNIT)				
C1			CC45SL2H181J	CERAMIC	180PF	J		
C2 ,3			CC45SL2H221J	CERAMIC	220PF	J		
C4			CC45SL2H271J	CERAMIC	270PF	J		
C5			CC45SL2H151J	CERAMIC	150PF	J		
C9			CK73GB1H103K	CHIP C	0.01UF	K		
C10			CK73FB1E103K	CHIP C	0.01UF	K		
C11 ,12			CK73GB1H103K	CHIP C	0.01UF	K		
C13			CK73FB1E103K	CHIP C	0.01UF	K,		
C14 ,15			CK73GB1H103K	CHIP C	0.01UF	K		
C16			CK73FB1E103K	CHIP C	0.01UF	K		
C17			CC73GCH1H220J	CHIP C	22PF	J		
C18			CK73GB1H103K	CHIP C	0.01UF	K		
C19			CC73FCH1H030C	CHIP C	3PF	C		
C20			CK73GB1H103K	CHIP C	0.01UF	K		
C21 -24			CK73FB1E103K	CHIP C	0.01UF	K		
C25			CC73FSL1H101J	CHIP C	100PF	J		
C26			CK73FB1E103K	CHIP C	0.01UF	K		
C28			CE04NW1C470M	ELECTRO	47UF	16WV		
C29			CK73GB1H103K	CHIP C	0.01UF	K		
C30 ,31			CK73EF1C105Z	CHIP C	1.0UF	Z		
C32			C92-0003-05	CHIP TAN	0.47UF	25WV		
C33			CK73FB1E104K	CHIP C	0.10UF	K		
C34			C92-0504-05	CHIP TAN	0.68UF	20WV		
C35			CE04NW1C470M	ELECTRO	47UF	16WV		
C36			CK73FB1E103K	CHIP C	0.01UF	K		
C37			CC73GCH1H330J	CHIP C	33PF	J		
C38			CE04NW1C470M	ELECTRO	47UF	16WV		
C39			CK73FB1E103K	CHIP C	0.01UF	K		
C40			C92-0004-05	ELECTRO	1.0UF	16WV		
C41			CK73FB1E103K	CHIP C	0.01UF	K		
C42			CE04NW1E100M	ELECTRO	10UF	25WV		
C43 ,44			CK73FB1E103K	CHIP C	0.01UF	K		
C45			CK73FB1E103K	CHIP C	0.01UF	K		
C46			CE04NW1C470M	ELECTRO	47UF	16WV		
C47			CK73FB1E103K	CHIP C	0.01UF	K		
C48			CK73FB1H822K	CHIP C	8200PF	K		
C49			CK73FB1H102K	CHIP C	1000PF	K		
C50			CC73FCH1H270J	CHIP C	27PF	J		
C51			CC73FUJ1H100D	CHIP C	10PF	D		
C52			CK73EF1C105Z	CHIP C	1.0UF	Z		
C53			CK73FB1E103K	CHIP C	0.01UF	K		
C54			CK73FB1H102K	CHIP C	1000PF	K		
C55 -57			CK73FB1E103K	CHIP C	0.01UF	K		
C58			CE04NW1E100M	ELECTRO	10UF	25WV		
C59			CE04NW1A330M	ELECTRO	33UF	10WV		
C60			CK73FB1E103K	CHIP C	0.01UF	K		
C61			CE04NW1A221M	ELECTRO	220UF	10WV		

L:Scandinavia K:USA P:Canada
Y:PX(Far East, Hawaii) T:England E:Europe
Y:AAFES(Europe) X:Australia M:Other Areas

⚠ indicates safety critical components

PARTS LIST

※ New Parts
Parts without Parts No. are not supplied.
Les articles non mentionnés dans le Parts No. ne sont pas fournis.
Teile ohne Parts No. werden nicht geliefert.

28M TX-RX UNIT (X57-3790-01)

Ref. No. 参照番号	Address 位置	New Parts 新	Parts No. 部品番号	Description 部品名／規格			Destination 仕向	Remarks 備考
C62			CC73FCH1H030C	CHIP C	3PF	C		
C63			CK73FB1E103K	CHIP C	10PF	J		
C64			CK73FB1E103K	CHIP C	0.01UF	K		
C65			CC73FCH1H180J	CHIP C	18PF	J		
C66			CK73FB1E103K	CHIP C	0.01UF	K		
C67			CE04NW1C101M	ELECTRO	100UF	16WV		
C68 ,69			CK73FB1E103K	CHIP C	0.01UF	K		
C70			CK73FB1H223K	CHIP C	0.022UF	K		
C71			CK73FB1E103K	CHIP C	0.01UF	K		
C72			CK73EF1C105Z	CHIP C	1.0UF	Z		
C73			CE04NW1E100M	ELECTRO	10UF	25WV		
C74			CK73FB1E103K	CHIP C	0.01UF	K		
C75			CK73EF1C105Z	CHIP C	1.0UF	Z		
C76			CK73FB1H223K	CHIP C	0.022UF	K		
C77			CK73FB1E103K	CHIP C	0.01UF	K		
C79 ,80			CK73FB1E103K	CHIP C	0.01UF	K		
C81			CK73FB1H102K	CHIP C	1000PF	K		
C82			CE04NW1E330M	ELECTRO	33UF	25WV		
C83			CK73FB1E103K	CHIP C	0.01UF	K		
C84			CM73F2H102J	CHIP C	1000PF	J		
C85			CM73F2H271J	CHIP C	270PF	J		
C86			C93-0509-05					
C87			CC73FCH1H330J	CHIP C	33PF	J		
C88			C93-0509-05					
C89			CK73FB1E103K	CHIP C	0.01UF	K		
C90			CC73FCH1H040C	CHIP C	4PF	C		
C91			CC73FCH1H0R5C	CHIP C	0.5PF	C		
C92 -96			CK73FB1E103K	CHIP C	0.01UF	K		
C97			CC73FCH1H080C	CHIP C	8PF	C		
C98			CC73FSL1H101J	CHIP C	100PF	J		
C99			CC73FCH1H820J	CHIP C	82PF	J		
C100			CK73FB1E103K	CHIP C	0.01UF	K		
C101			CC73FCH1H0R5C	CHIP C	0.5PF	C		
C102-111			CC73FSL1H101J	CHIP C	100PF	J		
C112,113			CK73FB1E103K	CHIP C	0.01UF	K		
C114			CK73GB1H103K	CHIP C	0.01UF	K		
C115			CK73FB1E103K	CHIP C	0.01UF	K		
C116			CK73FB1E103K	CHIP C	0.01UF	K		
C117			CK73FB1H102K	CHIP C	1000PF	K		
C118			CE04NW1E100M	ELECTRO	10UF	25WV		
C119			CK73FB1E103K	CHIP C	0.01UF	K		
C120			CC73GCH1H680J	CHIP C	68PF	J		
C121			CC73GCH1H151J	CHIP C	150PF	J		
C122,123			CC73GCH1H151J	CHIP C	150PF	J		
C124,125			CK73FB1E103K	CHIP C	0.01UF	K		
C126			CK73GB1H102K	CHIP C	1000PF	K		
C127			CK73FB1E103K	CHIP C	0.01UF	K		
C129			CC73FCH1H560J	CHIP C	56PF	J		
C133			CC73FCH1H680J	CHIP C	68PF	J		
C137			CC73FCH1H040C	CHIP C	4PF	C		
C138			CC73GCH1H181J	CHIP C	180PF	J		
TC1			C05-0345-05	TRIMMING CAP 10PF				
			B22-0673-04	TERMINAL BOARD(+)				
			E30-3009-05	ANT. CABLE				

L:Scandinavia K:USA P:Canada
Y:PX(Far East, Hawaii) T:England E:Europe
Y:AAFES(Europe) X:Australia M:Other Areas

⚠ indicates safety critical components.

PARTS LIST

* New Parts
Parts without Parts No. are not supplied.
Les articles non mentionnés dans le Parts No. ne sont pas fournis.
Teile ohne Parts No. werden nicht geliefert.

28M TX-RX UNIT (X57-3790-01)

Ref. No. 参照番号	Address 位置	New Parts 新	Parts No. 部品番号	Description 部品名／規格	Destination 仕向	Remarks 備考
CN1 ,2			B40-5461-05	PIN ASSY(12P)		
J1			E11-0442-05	PHONE JACK		
TP2			E23-0465-05	TERMINAL(TP)		
			P10-2006-04	SHIELDING PLATE(FINAL)		
		*	P10-2009-04	SHIELDING PLATE(L TYPE)		
			P10-2010-03	SHIELDING COVER		
			P10-2012-04	SHIELDING CASE (VCO-PLL)		
		*	P12-0421-04	CONDUCTIVE SHEET(25.4X43)		
		*	P12-0422-04	CONDUCTIVE SHEET(25.4X15)		
			P20-1008-04	INSULATING BOARD(APC)		
		*	P20-1090-04	INSULATING BOARD(60X22)		
			G02-0600-14	FLAT SPRING(THERMAL SWITCH)		
			G02-0715-04	FLAT SPRING(APC TR)		
			G02-0718-04	FLAT SPRING(VCO)		
		*	G02-0720-04	FLAT SPRING(FRONT)		
			G11-0655-04	CONDUCTIVE RUBBER(CN1,CN1 5SX8		
			G11-0661-04	INSULATING SHEET(APC TR)		
			G13-0841-04	CUSHION(XTAL)		
			G13-1319-04	CUSHION(VCO)		
			G13-1337-04	CUSHION(VCO)		
		*	J30-0583-14	SPACER(FINAL)		
			J42-0471-04	DC CORD BUSHING		
CD1			L79-1013-05	FILTER		
CF1			L72-0372-05	CERAMIC FILTER(CFWM455F)		
L1		*	L34-4283-05	COIL(7.5T)		
L2 -4		*	L34-4284-05	COIL(10.5T)		
L5		*	L34-4285-05	COIL(1ST IF)		
L6			L40-6891-19	SMALL FIXED INDUCTOR(6.8UH)		
L7			L40-1001-19	SMALL FIXED INDUCTOR(100H)		
L8		*	L34-1355-05	COIL(10.5T)		
L9		*	L40-6882-19	SMALL FIXED INDUCTOR(0.68UH)		
L10			L40-3982-19	SMALL FIXED INDUCTOR(0.39UH)		
L11		*	L34-1361-05	COIL(4.5T)		
L12		*	L34-1354-05	COIL(8.5T)		
L13			L34-1352-05	COIL(8T)		
L14		*	L34-1363-05	COIL(2T)		
L15			L34-1351-05	COIL(7T)		
L16		*	L34-1364-05	COIL		
L17		*	L34-1356-05	COIL		
L18		*	L34-1355-05	COIL		
L19		*	L33-0741-05	CHOKE COIL		
L20 ,21		*	L34-1355-05	COIL(10.5T)		
L22 ,23		*	L40-5691-19	SMALL FIXED INDUCTOR(5.6UH)		
L24			L40-3982-19	SMALL FIXED INDUCTOR(0.39UH)		
L25			L40-1001-19	SMALL FIXED INDUCTOR(10UH)		
L27			L40-1892-19	SMALL FIXED INDUCTOR(1.8UH)		
X1		*	L77-1465-05	CRYSTAL RESONATOR(9.295MHZ)		
XF1		*	L71-0422-05	CRYSTAL FILTER(8.83MHZ)		
			N09-2179-05	SCREW(		
			N87-2606-46	BRAZIER HEAD TAPTITE SCREW		
			N87-2608-46	BRAZIER HEAD TAPTITE SCREW		
			N88-2606-46	FLAT HEAD TAPTITE SCREW		

L:Scandinavia K:USA P:Canada
Y:PX(Far East, Hawaii) T:England E:Europe
Y:AAFES(Europe) X:Australia M:Other Areas

⚠ indicates safety critical components.

PARTS LIST

X :New Parts
Parts without Parts No. are not supplied
Les pièces sans numéros ne sont pas fournis.
Teile ohne Parts No. werden nicht geliefert.

28M TX-RX UNIT (X57-3790-01)

Ref. No. 参照番号	Address 位置	New Parts 新	Parts No. 部品番号	Description 部品名／規格			Destination 仕向	Remarks 備考
R1			RK73FB2A472J	CHIP R	4.7K	J 1/10W		
R2			RK73FB2A103J	CHIP R	10K	J 1/10W		
R3			RK73FB2A472J	CHIP R	4.7K	J 1/10W		
R4			RK73FB2A680J	CHIP R	68	J 1/10W		
R5			RK73FB2A271J	CHIP R	270	J 1/10W		
R6			RK73FB2A680J	CHIP R	68	J 1/10W		
R7 ,8			RK73GB1J104J	CHIP R	100K	J 1/16W		
R9			RK73GB1J682J	CHIP R	6.8K	J 1/16W		
R10			RK73GB1J154J	CHIP R	150K	J 1/16W		
R11			RK73GB1J470J	CHIP R	47	J 1/16W		
R12			RK73GB1J103J	CHIP R	10K	J 1/16W		
R13 -15			RK73GB1J104J	CHIP R	100K	J 1/16W		
R16			RK73GB1J100J	CHIP R	10	J 1/16W		
R17			RK73FB2A101J	CHIP R	100	J 1/10W		
R18			RK73FB2A473J	CHIP R	47K	J 1/10W		
R19 ,20			RK73FB2A102J	CHIP R	1.0K	J 1/10W		
R21			RK73FB2A223J	CHIP R	22K	J 1/10W		
R22			RK73GB1J152J	CHIP R	1.5K	J 1/16W		
R23			RK73FB2A101J	CHIP R	100	J 1/10W		
R24			RK73FB2A472J	CHIP R	4.7K	J 1/10W		
R25			RK73FB2A391J	CHIP R	390	J 1/10W		
R26			RK73FB2A563J	CHIP R	56K	J 1/10W		
R27			RK73FB2A223J	CHIP R	22K	J 1/10W		
R28			RK73FB2A331J	CHIP R	330	J 1/10W		
R29			RK73FB2A334J	CHIP R	330K	J 1/10W		
R30			RK73FB2A222J	CHIP R	2.2K	J 1/10W		
R31			RK73FB2A274J	CHIP R	270K	J 1/10W		
R32			RK73FB2A101J	CHIP R	100	J 1/10W		
R33			RK73FB2A221J	CHIP R	220	J 1/10W		
R34			RK73FB2A103J	CHIP R	10K	J 1/10W		
R35			RK73FB2A104J	CHIP R	100K	J 1/10W		
R36			RK73FB2A473J	CHIP R	47K	J 1/10W		
R37			RK73FB2A471J	CHIP R	470	J 1/10W		
R38 ,39			RK73FB2A472J	CHIP R	4.7K	J 1/10W		
R40			RK73FB2A103J	CHIP R	10K	J 1/10W		
R41			RK73FB2A474J	CHIP R	470K	J 1/10W		
R42			RK73FB2A103J	CHIP R	10K	J 1/10W		
R43			RK73FB2A223J	CHIP R	22K	J 1/10W		
R44			RK73FB2A273J	CHIP R	27K	J 1/10W		
R45			RK73FB2A182J	CHIP R	1.8K	J 1/10W		
R46 -48			RK73FB2A103J	CHIP R	10K	J 1/10W		
R49			RK73FB2A182J	CHIP R	1.8K	J 1/10W		
R50			RK73FB2A184J	CHIP R	180K	J 1/10W		
R51			RK73FB2A223J	CHIP R	22K	J 1/10W		
R52			RK73FB2A103J	CHIP R	10K	J 1/10W		
R53			RK73FB2A223J	CHIP R	22K	J 1/10W		
R54 ,55			RK73FB2A102J	CHIP R	1.0K	J 1/10W		
R56 -58			RK73FB2A473J	CHIP R	47K	J 1/10W		
R60			RK73FB2A471J	CHIP R	470	J 1/10W		
R61			RK73FB2A105J	CHIP R	1.0M	J 1/10W		
R62			RK73FB2A104J	CHIP R	100K	J 1/10W		
R63			RK73FB2A103J	CHIP R	10K	J 1/10W		
R64 ,65			RK73FB2A222J	CHIP R	2.2K	J 1/10W		
R66			RK73FB2A102J	CHIP R	1.0K	J 1/10W		
R67			RK73FB2A122J	CHIP R	1.2K	J 1/10W		

L:Scandinavia K:USA P:Canada
Y:PX(Far East, Hawaii) T:England E:Europe
Y:AAFES(Europe) X:Australia M:Other Areas

⚠ indicates safety critical components.

PARTS LIST

* New Parts
Parts without Parts No. are not supplied.
Les articles non mentionnés dans le Parts No. ne sont pas fournis.
Teile ohne Parts No. werden nicht geliefert.

28M TX-RX UNIT (X57-3790-01)

Ref. No. 参照番号	Address 位置	New Parts 新	Parts No. 部品番号	Description 部品名／規格	Destination 仕向	Remarks 備考
R68			RK73FB2A220J	CHIP R 22 J 1/10W		
R69			R92-0670-05	CHIP R 0 OHM		
R70			RK73FB2A104J	CHIP R 100K J 1/10W		
R72			RK73FB2A221J	CHIP R 220 J 1/10W		
R73			RK73FB2A220J	CHIP R 22 J 1/10W		
R74			RK73FB2A221J	CHIP R 220 J 1/10W		
R75			RK73FB2A470J	CHIP R 47 J 1/10W		
R77			R92-1213-05	SOLID 100 1/2W		
R78 ,79			RK73FB2A223J	CHIP R 22K J 1/10W		
R80			R92-0699-05	SOLID 10 1/2W		
R81			RK73FB2A103J	CHIP R 10K J 1/10W		
R82			RK73GB1J222J	CHIP R 2.2K J 1/16W		
R83			RK73FB2A471J	CHIP R 470 J 1/10W		
R84			R92-1215-05	CHIP R 470 J 1/2W		
R85			RK73FB2A123J	CHIP R 12K J 1/10W		
R88			RK73FB2A102J	CHIP R 1.0K J 1/10W		
R89 -92			R92-1252-05	CHIP R 0 OHM		
R93 ,94			R92-0670-05	CHIP R 0 OHM		
R95			R92-0679-05	CHIP R 0 OHM		
R96 -98			R92-0670-05	CHIP R 0 OHM		
R99			R92-1217-05	CHIP R 0		
R100-103			R92-0670-05	CHIP R 0 OHM		
R104			RK73FB2A472J	CHIP R 4.7K J 1/10W		
R105,106			R92-0670-05	CHIP R 0 OHM		
R108			RK73FB2A681J	CHIP R 680 J 1/10W		
R111			R92-0670-05	CHIP R 0 OHM		
R115,116			R92-0670-05	CHIP R 0 OHM		
VR1			R12-6429-05	TRIMMING POT. 100K		
VR2			R12-6427-05	TRIM POT. 47K		
VR3			R12-6421-05	TRIM POT. 4.7K		
VR4			R12-6423-05	TRIM POT. 10K		
TS1			S79-0401-05	THERMAL SWITCH(95*C)		
D1 ,2			MA77	DIODE		
D3 -6		*	1SV228	DIODE		
D7			DAN235(K)	DIODE		
D8			1SS184	DIODE		
D9			DAN235(K)	DIODE		
D10			1SS181	DIODE		
D11			UM9401	DIODE		
D12			MI308	DIODE		
D13 ,14			1SS226	DIODE		
D15			DSA3A1	DIODE		
D16 ,17			1SS184	DIODE		
IC1			BU4094BF	IC		
IC2		*	KCH09	IC(28MHZ VCO-PLL)		
IC3			KCAC4	IC(MIC AMP)		
IC4		*	KCB16	IC(DRIVE)		
IC5			KCC04	IC(APC)		
IC6			KCD04	IC(PM IF)		
IC7			LA5009M	IC		
IC8		*	KCB17	IC(10-50MHZ FRONT)		
IC9			KCD05	IC(AM IF)		
Q1			2SK179(L)	FET		

L:Scandinavia K:USA P:Canada
Y:PX(Far East, Hawaii) T:England E:Europe
Y:AAFES(Europe) X:Australia M:Other Areas

⚠ indicates safety critical components

PARTS LIST

× New Parts
Parts without Parts No. are not supplied.
Les articles non mentionnés dans la Parts No. ne sont pas fournis
Teile ohne Parts No. werden nicht geliefert.

28M TX-RX UNIT (X57-3790-01)
28M SUB UNIT (X58-3840-01)
50M TX-RX UNIT (X57-3800-01)

Ref. No. 参照番号	Address 位置	New Parts 新	Parts No. 部品番号	Description 部品名／規格	Destination 仕向	Remarks 備考
Q2			3SK131(V12)	FET		
Q3			2SC2714(Y)	TRANSISTOR		
Q4 ,5			DTC144EU	DIGITAL TRANSISTOR		
Q6 ,7			DTA114EK	DIGITAL TRANSISTOR		
Q8			2SC2714(Y)	TRANSISTOR		
Q9			2SJ106(GR)	FET		
Q10			2SA1362(Y)	TRANSISTOR		
Q11			2SB1119S	TRANSISTOR		
Q12			DIC144WK	DIGITAL TRANSISTOR		
Q13			FMW1	TRANSISTOR		
Q14			2SC2712(Y)	TRANSISTOR		
Q15 -17			DTC144EK	DIGITAL TRANSISTOR		
Q18			2SD1757(S)	TRANSISTOR		
Q19			2SK208(Y)	FET		
Q20			2SC2714(Y)	TRANSISTOR		
Q21			2SC2712(Y)	TRANSISTOR		
Q22			FMG1	TRANSISTOR		
Q23			2SD1902R	TRANSISTOR		
Q24			2SC2712(Y)	TRANSISTOR		
Q25			DTA114EK	DIGITAL TRANSISTOR		
Q26			DTC143EK	DIGITAL TRANSISTOR		
Q27			DTC144EK	DIGITAL TRANSISTOR		
Z1		×	X58-3840-01	SUB UNIT(28MHZ 50W)		
28M SUB UNIT (X58-3840-01)						
C201			CC73FCH1H471J	CHIP C 470PF J		
C202,203			CK73FB1H152K	CHIP C 1500PF K		
C204			CM73F2H241J	CHIP C 240PF J		
L201			L34-1357-05	COIL(2T)		
L202			L40-1001-19	SMALL FIXED INDUCTOR(10UH)		
R201		×	R92-0686-05	CHIP R 33 J 1/2W		
Q201			2SC1971	TRANSISTOR		
Q202		×	2SC3240	TRANSISTOR		
50M TX-RX UNIT (X57-3800-01)						
			A10-1325-01	CHASSIS		
			B42-2437-04	LABEL(S/NO,UNIT))		
C1		×	CC45SL2H750J	CERAMIC 75PF J		
C2			CC45SL2H560J	CERAMIC 56PF J		
C3			CC45SL2H680J	CERAMIC 68PF J		
C4			CC45SL2H101J	CERAMIC 100PF J		
C5			CC45SL2H680J	CERAMIC 68PF J		
C6			CC45SL2H120J	CERAMIC 12PF J		
C7			CC45SL2H150J	CERAMIC 15PF J		
C8			CC45SL2H3R0C	CERAMIC 3.0PF C		
C9			CK73GB1H103K	CHIP C 0.01UF K		
C10			CK73FB1E103K	CHIP C 0.01UF K		
C11 ,12			CK73GB1H103K	CHIP C 0.01UF K		
C13			CK73FB1E103K	CHIP C 0.01UF K		
C14 ,15			CK73GB1H103K	CHIP C 0.01UF K		
C16			CK73FB1E103K	CHIP C 0.01UF K		
C17			CC73GCH1H120J	CHIP C 12PF J		

L:Scandinavia K:USA P:Canada
Y:PX(Far East, Hawaii) T:England E:Europe
Y:AAFES(Europe) X:Australia M:Other Areas

⚠ indicates safety critical components.

PARTS LIST

* New Parts
Parts without Parts No. are not supplied
Les articles non mentionnes dans le Parts No. ne sont pas fournis.
Teile ohne Parts No. werden nicht geliefert.

50M TX-RX UNIT (X57-3800-01)

Ref. No. 参照番号	Address 位置	New Parts 新	Parts No. 部品番号	Description 部品名／規格			Destination 仕向	Remarks 備考
C18			CK73GB1H103K	CHIP C	0.01UF	K		
C19			CC73FCH1H060D	CHIP C	6PF	D		
C20			CK73GB1H103K	CHIP C	0.01UF	K		
C21 -24			CK73FB1E103K	CHIP C	0.01UF	K		
C25			CK73FB1H102K	CHIP C	1000PF	K		
C26			CK73FB1E103K	CHIP C	0.01UF	K		
C27			CC73FCH1H040C	CHIP C	4.0PF	C		
C28			CE04NW1C470M	ELECTRO	47UF	16WV		
C29			CK73GB1H103K	CHIP C	0.01UF	K		
C30 ,31			CK73EF1C105Z	CHIP C	1.0UF	Z		
C32			C92-0003-05	CHIP TAN	0.47UF	25WV		
C33			CK73FB1E104K	CHIP C	0.10UF	K		
C34			C92-0504-05	CHIP TAN	0.68UF	20WV		
C35			CE04NW1C470M	ELECTRO	47UF	16WV		
C36			CK73FB1E103K	CHIP C	0.01UF	K		
C37			CC73GCH1H100D	CHIP C	10PF	D		
C38			CE04NW1C470M	ELECTRO	47UF	16WV		
C39			CK73FB1E103K	CHIP C	0.01UF	K		
C40			C92-0004-05	ELECTRO	1.0UF	16WV		
C41			CK73FB1E103K	CHIP C	0.01UF	K		
C42			CE04NW1E100M	ELECTRO	10UF	25WV		
C43 ,44			CK73FB1E103K	CHIP C	0.01UF	K		
C45			CK73FB1E103K	CHIP C	0.01UF	K		
C46			CE04NW1C470M	ELECTRO	47UF	16WV		
C47 -49			CK73FB1E103K	CHIP C	0.01UF	K		
C50			CC73FCH1H270J	CHIP C	27PF	J		
C51			CC73FCH1H120J	CHIP C	12PF	J		
C52			CK73EF1C105Z	CHIP C	1.0UF	Z		
C53			CK73FB1E103K	CHIP C	0.01UF	K		
C54			CK73FB1H102K	CHIP C	1000PF	K		
C55 -57			CK73FB1E103K	CHIP C	0.01UF	K		
C58			CE04NW1E100M	ELECTRO	10UF	25WV		
C59			CE04NW1A330M	ELECTRO	33UF	10WV		
C60			CK73FB1E103K	CHIP C	0.01UF	K		
C61			CE04NW1A221M	ELECTRO	220UF	10WV		
C62			CC73FCH1H100D	CHIP C	10PF	D		
C63 ,64			CK73FB1E103K	CHIP C	0.01UF	K		
C65			CC73FCH1H150J	CHIP C	15PF	J		
C66			CK73FB1E103K	CHIP C	0.01UF	K		
C67			CE04NW1C101M	ELECTRO	100UF	16WV		
C68 ,69			CK73FB1E103K	CHIP C	0.01UF	K		
C70			CK73FB1E223K	CHIP C	0.022UF	K		
C71			CK73FB1E103K	CHIP C	0.01UF	K		
C72			CK73EF1C105Z	CHIP C	1.0UF	Z		
C73			CE04NW1E100M	ELECTRO	10UF	25WV		
C74			CK73FB1E103K	CHIP C	0.01UF	K		
C75			CK73EF1C105Z	CHIP C	1.0UF	Z		
C76			CK73FB1E223K	CHIP C	0.022UF	K		
C77			CK73FB1H681K	CHIP C	680PF	K		
C78			CC73FCH1H220J	CHIP C	22PF	J		
C79 ,80			CK73FB1E103K	CHIP C	0.01UF	K		
C81			CK73FB1H102K	CHIP C	1000PF	K		
C82			CE04NW1E330M	ELECTRO	33UF	25WV		
C83			CK73FB1E103K	CHIP C	0.01UF	K		
C84			CM73F2W391J	CHIP C	390PF	J		

L:Scandinavia K:USA P:Canada
Y:PX(Far East, Hawaii) T:England E:Europe
Y:AAFES(Europe) X:Australia M:Other Areas

⚠ indicates safety critical components.

PARTS LIST

* New Parts
Parts without Parts No. are not supplied.
Les articles non mentionnes dans le Parts No. ne sont pas fournis.
Teile ohne Parts No. werden nicht geliefert.

50M TX-RX UNIT (X57-3800-01)

Ref. No. 参照番号	Address 位置	New Parts 新	Parts No. 部品番号	Description 部品名／規格	Destination 仕向	Remarks 備考
C85			CM73P24820J	CHIP C 82PF J		
C86		*	C93-0509-05	CERAMIC 0.0068UF J		
C87			CC73FCH1H390J	CHIP C 39PF J		
C88		*	C93-0509-05	CERAMIC 0.0068UF J		
C89			CK73FB1E103K	CHIP C 0.01UF K		
C90			CC73FCH1H020C	CHIP C 2.0PF C		
C91			CC73FCH1H0R5C	CHIP C 0.5PF C		
C92 -96			CK73FB1E103K	CHIP C 0.01UF K		
C97			CC73FCH1H020C	CHIP C 2.0PF C		
C98 ,99			CC73FCH1H390J	CHIP C 39PF J		
C100			CK73FB1E103K	CHIP C 0.01UF K		
C101			CC73FCH1H0R5C	CHIP C 0.5PF C		
C102-111			CC73FSL1H101J	CHIP C 100PF J		
C112-113			CK73FB1E103K	CHIP C 0.01UF K		
C114			CK73GB1H103K	CHIP C 0.01UF K		
C115,116			CK73FB1E103K	CHIP C 0.01UF K		
C117			CK73FB1H102K	CHIP C 1000PF K		
C118			CE04NW1E100M	ELECTRO 10UF 25WV		
C119			CK73FB1E103K	CHIP C 0.01UF K		
C124,125			CK73FB1B103K	CHIP C 0.01UF K		
C126			CK73GB1H102K	ﾁｯﾌﾟｺﾝ 1000PF K		
C127			CK73FB1E103K	CHIP C 0.01UF K		
C128			CC73GCH1H270J	ﾁｯﾌﾟｺﾝ 27PF J		
C130,131			CC73FCH1H1R5C	CHIP C 1.5PF C		
C132			CC73FCH1H150J	CHIP C 15PF J		
C133			CC73FCH1H560J	CHIP C 56PF J		
C134			CC73GCH1H050C	CHIP C 5PF C		
C135			CC73FSL1H101J	CHIP C 100PF J		
C136			CK73FB1E104K	CHIP C 0.10UF K		
C138			CC73GCH1H151J	CHIP C 150PF J		
C139,140			CC73FCH1H470J	CHIP C 47PF J		
TC1			C05-0345-05	TRIMMING CAP.10PF		
			E22-0673-04	TERMINAL(+)		
			E30-3009-05	ANT. CABLE		
CN1 ,2			E40-5461-05	PIN ASSY(12P)		
J1			E11-0442-05	PHONE JACK		
TP2			E23-0465-05	TERMINAL(TP))		
		*	F10-2006-04	SHIELDING PLATE(FINAL)		
			F10-2009-04	SHIELDING PLATE(L TYPE)		
		*	F10-2010-03	SHIELDING COVER		
			F10-2012-04	SHIELDING CASE(VCO-PLL)		
			P20-1008-04	INSULATING SHEET(APC)		
			P20-1090-04	INSULATING SHEET(60X22)		
			G02-0600-14	PLAT SPRING(THERMAL SWITCH)		
			G02-0705-04	PLAT SPRING(BPF COIL)		
		*	G02-0715-04	PLAT SPRING(APC TR)		
			G02-0718-04	PLAT SPRING(VCO)		
			G11-0655-04	CONDUCTIVE RUBBER(CN1,CN2 55X8		
			G11-0661-04	INSULATING SHEET(APC TR)		
			G13-0841-04	CUSHION(XTAL)		
			G13-1319-04	CUSHION(VCO 22X15)		
			G13-1332-04	CUSHION		
			G13-1337-04	CUSHION(BPF COIL,VCO)		

L:Scandinavia K:USA P:Canada
Y:PX(Far East, Hawaii) T:England E:Europe
Y:AAFES(Europe) X:Australia M:Other Area

⚠ indicates safety critical components.

PARTS LIST

* New Parts
Parts without Parts No. are not supplied
Les articles non mentionnés dans le Parts No. ne sont pas fournis.
Teile ohne Parts No. werden nicht geliefert.

50M TX-RX UNIT (X57-3600-01)

Ref. No. 参照番号	Address 位置	New Parts 新	Parts No. 部品番号	Description 部品名／規格	Destination 仕向	Remarks 備考
			G53-0508-04	PACKING		
		*	J30-0583-14	SPACER(FINAL)		
			J42-0471-04	DC CORD BUSHING		
CD1			L79-1013-05	FILTER		
CF1			L72-0372-05	CERAMIC FILTER(CFWM455E)		
L1		*	L34-4281-05	COIL(YELLOW)		
L2 -4			L34-4283-05	COIL(WHITE)		
L5			L34-4251-05	COIL(1ST IF)		
L6			L40-1582-19	SMALL FIXED INDUCTOR(0.15UH)		
L7			L40-1001-19	SMALL FIXED INDUCTOR(10UH)		
L8		*	L34-1347-05	COIL (6.5T)		
L9			L40-4782-19	SMALL FIXED INDUCTOR(0.47UH)		
L10		*	L40-1882-19	SMALL FIXED INDUCTOR(0.18UH)		
L11		*	L34-1344-05	COIL (2.5T)		
L12			L34-1354-05	COIL (8.5T)		
L13		*	L34-1352-05	COIL (6T)		
L14		*	L34-1345-05	COIL (1T)		
L15		*	L34-1346-05	COIL (4T)		
L16			L34-1364-05	COIL (20.5T)		
L17		*	L34-1349-05	COIL (5.5T)		
L18		*	L34-1348-05	COIL (5.5T)		
L19		*	L33-0742-05	SMALL FIXED INDUCTOR(10UH)		
L20 ,21		*	L34-1347-05	COIL (6.5T)		
L25			L40-1001-19	SMALL FIXED INDUCTOR(10UH)		
L26			L40-1582-19	SMALL FIXED INDUCTOR(0.15UH)		
L27		*	L40-1592-19	SMALL FIXED INDUCTOR(0.15UH)		
L28			L40-2282-19	SMALL FIXED INDUCTOR(0.22UH)		
X1		*	L77-1464-05	CRYSTAL RESONATOR(11.05MHZ)		
XF1		*	L71-0421-05	CRYSTAL FILTER(10.595MHZ)		
		*	N09-2179-05	SCREW (X3)		
			N87-2606-46	BRAZIER HEAD TAPTITE SCREW		
			N87-2608-46	BRAZIER HEAD TAPTITE SCREW		
			N88-2606-46	FLAT HEAD TAPTITE SCREW		
R1			RK73FB2A472J	CHIP R 4.7K J 1/10W		
R2			RK73FB2A103J	CHIP R 10K J 1/10W		
R3			RK73FB2A472J	CHIP R 4.7K J 1/10W		
R4			RK73FB2A680J	CHIP R 68 J 1/10W		
R5			RK73FB2A271J	CHIP R 270 J 1/10W		
R6			RK73FB2A680J	CHIP R 68 J 1/10W		
R7 ,8			RK73GB1J104J	CHIP R 100K J 1/16W		
R9			RK73GB1J562J	CHIP R 5.6K J 1/16W		
R10			RK73GB1J154J	CHIP R 150K J 1/16W		
R11			RK73GB1J101J	CHIP R 100 J 1/16W		
R12			RK73GB1J103J	CHIP R 10K J 1/16W		
R13 -15			RK73GB1J104J	CHIP R 100K J 1/16W		
R16			RK73GB1J100J	CHIP R 10 J 1/16W		
R17			RK73FB2A101J	CHIP R 100 J 1/10W		
R18			RK73FB2A473J	CHIP R 47K J 1/10W		
R19 ,20			RK73FB2A102J	CHIP R 1.0K J 1/10W		
R21			RK73FB2A223J	CHIP R 22K J 1/10W		
R22			RK73GB1J152J	CHIP R 1.5K J 1/16W		
R23			RK73FB2A101J	CHIP R 100 J 1/10W		
R24			RK73FB2A152J	CHIP R 1.5K J 1/10W		

L:Scandinavia K:USA P:Canada
Y:PX(Far East, Hawaii) T:England E:Europe
Y:AAFES(Europe) X:Australia M:Other Areas

⚠ indicates safety critical components.

PARTS LIST

※ New Parts
Parts without Parts No. are not supplied.
Les articles non mentionnés dans le Parts No. ne sont pas fournis.
Teile ohne Parts No. werden nicht geliefert.

50M TX-RX UNIT (X57-3800-01)

Ref. No. 参照番号	Address 位置	New Parts 新	Parts No. 部品番号	Description 部品名／規格			Destination 仕向	Remarks 備考
R25			RK73FB2A391J	CHIP R	390	J 1/10W		
R26			RK73FB2A563J	CHIP R	56K	J 1/10W		
R27			RK73FB2A223J	CHIP R	22K	J 1/10W		
R28			RK73FB2A331J	CHIP R	330	J 1/10W		
R30			RK73FB2A222J	CHIP R	2.2K	J 1/10W		
R31			RK73FB2A274J	CHIP R	270K	J 1/10W		
R32			RK73FB2A101J	CHIP R	100	J 1/10W		
R33			RK73FB2A221J	CHIP R	220	J 1/10W		
R34			RK73FB2A103J	CHIP R	10K	J 1/10W		
R35			RK73FB2A334J	CHIP R	330K	J 1/10W		
R36			RK73FB2A473J	CHIP R	47K	J 1/10W		
R37			RK73FB2A471J	CHIP R	470	J 1/10W		
R38			RK73FB2A472J	CHIP R	4.7K	J 1/10W		
R40			RK73FB2A103J	CHIP R	10K	J 1/10W		
R41			RK73FB2A474J	CHIP R	470K	J 1/10W		
R42			RK73FB2A103J	CHIP R	10K	J 1/10W		
R43			RK73FB2A223J	CHIP R	22K	J 1/10W		
R44			RK73FB2A273J	CHIP R	27K	J 1/10W		
R45			RK73FB2A182J	CHIP R	1.8K	J 1/10W		
R46 -48			RK73FB2A103J	CHIP R	10K	J 1/10W		
R49			RK73FB2A182J	CHIP R	1.8K	J 1/10W		
R50			RK73FB2A154J	CHIP R	150K	J 1/10W		
R51			RK73FB2A223J	CHIP R	22K	J 1/10W		
R52			RK73FB2A103J	CHIP R	10K	J 1/10W		
R53			RK73FB2A223J	CHIP R	22K	J 1/10W		
R54 ,55			RK73FB2A102J	CHIP R	1.0K	J 1/10W		
R56 -58			RK73FB2A473J	CHIP R	47K	J 1/10W		
R59 ,60			RK73FB2A470J	CHIP R	47	J 1/10W		
R61			RK73FB2A105J	CHIP R	1.0M	J 1/10W		
R62			RK73FB2A472J	CHIP R	4.7K	J 1/10W		
R63			RK73FB2A183J	CHIP R	18K	J 1/10W		
R64 ,65			RK73FB2A222J	CHIP R	2.2K	J 1/10W		
R66			RK73FB2A102J	CHIP R	1.0K	J 1/10W		
R67			RK73FB2A122J	CHIP R	1.2K	J 1/10W		
R68			RK73FB2A220J	CHIP R	22	J 1/10W		
R69			R92-0670-05	CHIP R	0 OHM			
R70			RK73FB2A104J	CHIP R	100K	J 1/10W		
R72			RK73FB2A471J	CHIP R	470	J 1/10W		
R73			RK73FB2A120J	CHIP R	12 2	A		
R74			RK73FB2A471J	CHIP R	471	J 1/10W		
R75			RK73FB2A470J	CHIP R	47	J 1/10W		
R76			RK73FB2A472J	CHIP R	4.7K	J 1/10W		
R77			R92-1213-05	SOLID	100	1/2W		
R78 ,79			RK73FB2A223J	CHIP R	22K	J 1/10W		
R80			R92-0685-05	CHIP R	22	J 1/2W		
R81			RK73FB2A222J	CHIP R	2.2K	J 1/10W		
R82			RK73GB1J332J	CHIP R	3.3K	J 1/16W		
R83			RK73FB2A471J	CHIP R	470	J 1/10W		
R84			R92-1215-05	CHIP R	470	J 1/2W		
R86			R92-1252-05	CHIP R	0 OHM			
R88			RK73FB2A102J	CHIP R	1.0K	J 1/10W		
R90			RK73GB1J105J	CHIP R	1.0M	J 1/16W		
R93 ,94			R92-0670-05	CHIP R	0 OHM			
R95			R92-0679-05	CHIP R	0 OHM			
R96 -98			R92-0670-05	CHIP R	0 OHM			

L:Scandinavia K:USA P:Canada
Y:PX(Far East, Hawaii) T:England E:Europe
Y:AAFES(Europe) X:Australia M:Other Areas

⚠ indicates safety critical components

PARTS LIST

* New Parts
Parts without Parts No. are not supplied.
Les articles non mentionnes dans le Parts No. ne sont pas fournis.
Teile ohne Parts No. werden nicht geliefert.

50M TX-RX UNIT (X57-3800-01)

Ref. No. 参照番号	Address 位置	New Parts 新	Parts No. 部品番号	Description 部品名／規格	Destination 仕向	Remarks 備考
R99			R92-1217-05	CHIP R 0		
R100-103			R92-0670-05	CHIP R 0 OHM		
R104			RK73FB2A472J	CHIP R 4.7K J 1/10W		
R105,106			R92-0670-05	CHIP R 0 OHM		
R108			RK73FB2A102J	CHIP R 1.0K J 1/10W		
R109			RK73GB1J473J	CHIP R 47K J 1/16W		
R110			RK73FB2A221J	CHIP R 220 J 1/10W		
R111			R92-0670-05	CHIP R 0 OHM		
R112-114			R92-1252-05	CHIP R 0 OHM		
VR1			R12-6429-05	TRIM POT. 100K		
VR2			R12-6427-05	TRIM POT. 47K		
VR3			R12-6421-05	TRIM POT. 4.7K		
VR4			R12-6423-05	TRIM POT. 10K		
TS1			S59-0444-05	THERMAL SWITCH(90°C)		
D1 ,2			MA77	DIODE		
D3 -6			1SV228	DIODE		
D7			DAN235(K)	DIODE		
D8			1SS184	DIODE		
D9			DAN235(K)	DIODE		
D10			1SS181	DIODE		
D11			MI407	DIODE		
D12			MI308	DIODE		
D13 ,14			1SS226	DIODE		
D15			DSA3A1	DIODE		
D16 ,17			1SS184	DIODE		
IC1			BU4094BF	IC		
IC2		*	KCH10	IC(50MHZ VCO-PLL)		
IC3			KCA04	IC(MIC AMP)		
IC4		*	KCB16	IC(DRIVE)		
IC5			KCC04	IC(APC)		
IC6			KCD04	IC(FM IF DET)		
IC7			LA5010M	IC(10V AVR)		
IC8		*	KCB19	IC(40-76MHZ FRONT)		
IC9			KCD05	IC(AM FM)		
Q1			3SK184(S)	FET		
Q2			3SK131(V12)	FET		
Q3			2SC2714(Y)	TRANSISTOR		
Q4			DTC144EK	DIGITAL TRANSISTOR		
Q5			DTC144EU	DIGITAL TRANSISTOR		
Q6 ,7			DTA114EK	DIGITAL TRANSISTOR		
Q8			2SC2714(Y)	TRANSISTOR		
Q9			2SJ106(GR)	FET		
Q10			2SA1362(Y)	TRANSISTOR		
Q11			2SB1119S	TRANSISTOR		
Q12			DTC144WK	デジタルトランジスタ		
Q13			FMW1	トランジスタ		
Q14			2SC2712(Y)	トランジスター		
Q15 -17			DTC144EK	デジタルトランジスタ		
Q18			2SD1757K	トランジスタ		
Q19			2SK208(Y)	FET		
Q20			2SC2714(Y)	トランジスター		
Q21			2SC2712(Y)	トランジスター		
Q22			FMG1	トランジスタ		
Q23			2SD1902R	トランジスタ		

L:Scandinavia K:USA P:Canada
Y:PX(Far East, Hawaii) T:England E:Europe
Y:AAFES(Europe) X:Australia M:Other Areas

⚠ indicates safety critical components.

PARTS LIST

* New Parts
Parts without Parts No. are not supplied.
Les articles non mentionnés dans le Parts No. ne sont pas fournis.
Teile ohne Parts No. werden nicht geliefert.

50M TX-RX UNIT (X57-3800-01)
50M SUB UNIT (X58-3840-03)
220M TX-RX UNIT (X57-3810-10)

Ref. No. 参照番号	Address 位置	New Parts 新	Parts No. 部品番号	Description 部品名／規格	Destination 仕向	Remarks 備考
Q24			2SC2712(Y)	トランジスタ		
Q25			DTA114EK	デジタル内蔵トランジスタ		
Q26			DTC143EK	デジタル内蔵トランジスタ		
Z1		*	X58-3840-03	SUB UNIT(50M 50W)		
50M SUB UNIT (X58-3840-03)						
C201			CC73FCH1H391J	CHIP C 390PF J		
C202			CC73FCH1H221J	CHIP C 220PF J		
C203			CK73FB1H471K	CHIP C 470PF K		
C204			CM73F2H910J	CHIP C 91PF J		
L201		*	L34-1357-05	マイクロコイル (2T)		
L202			L40-1001-19	コモンモードインダクタ (10UH)		
Q201			2SC1972	トランジスタ		
Q202		*	MRF492	トランジスタ		
220M TX-RX UNIT (X57-3810-10)						
			A10-1316-01	CHASSIS		
			B42-2437-04	LABEL(S/N&,UNIT)		
C5			CC73FCH1H030C	CHIP C 3PF C		
C7 -9			CK73FB1H102K	CHIP C 1000PF K		
C10			CK73FB1E103K	CHIP C 0.01UF K		
C11			CC73FCH1H0R5C	CHIP C 0.5PF C		
C12			CC73FCH1H560J	CHIP C 56PF J		
C14			CC73FCH1H0R5C	CHIP C 0.5PF C		
C15			CC73FCH1H120J	CHIP C 12PF J		
C17			CC73FCH1H120J	CHIP C 12PF J		
C18			CK73FB1H102K	CHIP C 1000PF K		
C19			CC73FCH1H060D	CHIP C 6PF D		
C20			CK73FB1H102K	CHIP C 1000PF K		
C21			CC73FCH1H060D	CHIP C 6PF D		
C22			CK73FB1E103K	CHIP C 0.01UF K		
C24			CK73FB1E103K	CHIP C 0.01UF K		
C25			CC45SL2H030C	CERAMIC 3.0PF C		
C26			CK73FB1H102K	CHIP C 1000PF K		
C29			CK73FB1E103K	CHIP C 0.01UF K		
C30			CC73FCH1H150J	CHIP C 15PF J		
C31			CK73FB1H102K	CHIP C 1000PF K		
C33			CK73FB1E104K	CHIP C 0.10UF K		
C34 ,35			CK73EF1C105Z	CHIP C 1.0UF Z		
C36 ,37			CK73FB1E103K	CHIP C 0.01UF K		
C44 ,45			CE04NW1C470M	ELECTR& 47UF 16WV		
C46			C92-0S04-05	CHIP TAN 0.68UF 20WV		
C47			CE04NW1C470M	ELECTR& 47UF 16WV		
C48			C92-0003-05	CHIP TAN 0.47UF 25WV		
C50			CE04NW1C470M	ELECTR& 47UF 16WV		
C51 ,52			CK73FB1E103K	CHIP C 0.01UF K		
C53 ,54			CK73FB1H102K	CHIP C 1000PF K		
C55			CK73EF1C105Z	CHIP C 1.0UF Z		
C56			CC73FUJ1H150J	CHIP C 15PF J		
C57			CK73FB1H102K	CHIP C 1000PF K		
C58			CC73FUJ1H200J	CHIP C 20PF J		
C59 ,60			CK73FB1H102K	CHIP C 1000PF K		
C61			CE04NW1C470M	ELECTR& 47UF 16WV		

L:Scandinavia K:USA P:Canada
Y:PX(Far East, Hawaii) T:England E:Europe
Y:AAFES(Europe) X:Australia M:Other Areas

⚠ indicates safety critical components.

PARTS LIST

※ New Parts
Parts without Parts No. are not supplied.
Les articles non mentionnés dans le Parts No. ne sont pas fournis.
Teile ohne Parts No. werden nicht geliefert.

220M TX-RX UNIT (X57-3810-10)

Ref. No. 参照番号	Address 位置	New Parts 新	Parts No. 部品番号	Description 部品名／規格			Destination 仕向	Remarks 備考
C62			CK73FB1H102K	CHIP C	1000PF	K		
C63			CK73FB1E103K	CHIP C	0.01UF	K		
C64			CE04NW1E100M	ELECTRO	10UF	25WV		
C65			CE04NW1A330M	ELECTRO	33UF	10WV		
C66			CK73FB1E103K	CHIP C	0.01UF	K		
C67			CK73FB1H102K	CHIP C	1000PF	K		
C68 ,69			CC73FCH1H100D	CHIP C	10PF	D		
C70			CK73FB1E103K	CHIP C	0.01UF	K		
C71 -73			CK73FB1H102K	CHIP C	1000PF	K		
C74			CK73FB1H223K	CHIP C	0.022UF	K		
C75			CE04NW1C101M	ELECTRO	100UF	16WV		
C76			CK73EF1C105Z	CHIP C	1.0UF	Z		
C77 ,78			CK73FB1H102K	CHIP C	1000PF	K		
C79			CK73EF1C105Z	CHIP C	1.0UF	Z		
C81			CC45SL2H180J	CERAMIC	18PF	J		
C82			CK73FB1H102K	CHIP C	1000PF	K		
C83			CK45B2H102K	CERAMIC	1000PF	K		
C84			CC45SL2H040C	CERAMIC	4.0PF	C		
C85			CC73FCH1H0R5C	CHIP C	0.5PF	C		
C86			CC73FCH1H0R5C	CHIP C	0.5PF	C		
C87			CC73FCH1H020C	CHIP C	2.0PF	C		
C88			CC45SL2H220J	CERAMIC	22PF	J		
C89			CC45SL2H180J	CERAMIC	18PF	J		
C90 -92			CK73FB1H102K	CHIP C	1000PF	K		
C93			CC73FCH1H0R5C	CHIP C	0.5PF	C		
C94			CM73F2H050D	CHIP C	5.0PF	D		
C95			CC73FCH1H020C	CHIP C	2.0PF	C		
C96			CK73FB1E103K	CHIP C	0.01UF	K		
C97			CC73FCH1H150J	CHIP C	15PF	J		
C98			CK73FB1H102K	CHIP C	1000PF	K		
C99			CE04NW1E100M	ELECTRO	10UF	25WV		
C100			CC73FCH1H010C	CHIP C	1PF	C		
C101			CE04NW1E100M	ELECTRO	10UF	25WV		
C102			CC73FCH1H470J	CHIP C	47PF	J		
C103			CK73FB1H102K	CHIP C	1000PF	K		
C104			CK73FB1E103K	CHIP C	0.01UF	K		
C105			CK73FB1H223K	CHIP C	0.022UF	K		
C106			CC73FCH1H470J	CHIP C	47PF	J		
C108			CC73FCH1H390J	CHIP C	39PF	J		
C109,110			CK73FB1H102K	CHIP C	1000PF	K		
C111			CK73FB1E103K	CHIP C	0.01UF	K		
C112			CE04NW1A221M	ELECTRO	220UF	10WV		
C113			CC73FSL1H100D	CHIP C	10PF	D		
C114,115			CC73FSL1H101J	CHIP C	100PF	J		
C116			CC73FCH1H060D	CHIP C	6PF	D		
C119			CE04NW1E100M	ELECTRO	10UF	25WV		
C120-127			CC73FSL1H101J	CHIP C	100PF	J		
C128,129			CK73FB1H102K	CHIP C	1000PF	K		
C130			CE04EW1C102M	ELECTRO	1000UF	16WV		
C131			CC73FCH1H070D	CHIP C	7PF	D		
C133			CC73FCH1H100D	CHIP C	10PF	D		
C134			CK73FB1E103K	CHIP C	0.01UF	K		
C135-137			CK73FB1H102K	CHIP C	1000PF	K		
C140			CC73FCH1H010C	CHIP C	1PF	C		
TC1			005-0371-05	TRIM CAP	10PF			

L:Scandinavia K:USA P:Canada
Y:PX(Far East, Hawaii) T:England E:Europe
Y:AAFES(Europe) X:Australia M:Other Areas

⚠ indicates safety critical components

PARTS LIST

* New Parts
Parts without Parts No. are not supplied.
Les articles non mentionnes dans le Parts No. ne sont pas fournis.
Teile ohne Parts No. werden nicht geliefert.

220M TX-RX UNIT (X57-3810-10)

Ref. No. 参照番号	Address 位置	New Parts 新部	Parts No. 部品番号	Description 部品名/規格	Destination 仕向	Remarks 備考
			E22-0673-04	TERMINAL BOARD(+)		
			E30-3009-05	ANT. CABLE		
CN1 ,2			E40-5461-05	PIN ASSY		
J1			E11-0442-05	PHONE JACK		
J2			E23-0619-05	TERMINAL(TP)		
			F10-1446-04	SHIELDING PLATE		
			F10-2010-03	SHIELDING COVER		
			F10-2012-04	SHIELDING PLATE(VCO-PLL)		
			F20-1008-04	INSULATING SHEET(APC)		
			G02-0600-14	FLAT SPRING(THERMAL SWITCH)		
			G02-0705-04	FLAT SPRING		
			G02-0715-04	FLAT SPRING(APC TR)		
			G02-0716-04	FLAT SPRING(VCO)		
			G11-0655-04	SHEET(CN1,CN2 55X8)		
			G11-0656-14	CONDUCTIVE RUBBER		
			G11-0661-04	INSULATING SHEET(APC TR)		
			G13-0841-04	CUSHION(XTAL)		
			G13-1337-04	CUSHION(VCO)		
			G13-1349-04	CUSHION(VCO 22X7)		
			G13-1351-04	CUSHION(55X8)		
			J42-0471-04	DC CORD BUSHING		
CD1			L79-1013-05	FILTER		
CF1			L72-0372-05	CERAMIC FILTER(CFWM455F)		
L1 -4		*	L34-4279-05	COIL(1ST IF)		
L5			L40-1082-19	SMALL FIXED INDUCTOR(0.1UH)		
L6		*	L34-4280-05	COIL		
L10			L40-1582-19	SMALL FIXED INDUCTOR(0.15UH)		
L11			L34-1239-05	COIL		
L12			L34-1207-05	COIL		
L13			L34-1208-05	COIL		
L14			L34-0908-05	COIL		
L15 ,16			L34-0641-05	COIL		
L19			L40-8272-48	SMALL FIXED INDUCTOR(82NH)		
L20			L40-1001-19	SMALL FIXED INDUCTOR(10UH)		
L21			L40-1092-19	SMALL FIXED INDUCTOR(1UH)		
L22			L40-3372-48	SMALL FIXED INDUCTOR(33NH)		
X1			L77-1405-05	CRYSTAL RESONATOR(12.8MHZ)		
X2		*	L77-1463-05	CRYSTAL RESONATOR(30.37MHZ)		
XF1		*	L71-0420-05	CRYSTAL FILTER(30.625MHZ)		
			N09-2077-05	SCREW(MODULE)		
			N87-2606-46	BRAZIER HEAD TAPTITE SCREW		
			N88-2606-46	FLAT HEAD TAPTITE SCREW		
R5			RK73FB2A333J	CHIP R 33K J 1/10W		
R6			RK73FB2A104J	CHIP R 100K J 1/10W		
R7			RK73FB2A101J	CHIP R 100 J 1/10W		
R8			RK73FB2A103J	CHIP R 10K J 1/10W		
R9			RK73FB2A101J	CHIP R 100 J 1/10W		
R10 -12			RK73FB2A104J	CHIP R 100K J 1/10W		
R13			RK73FB2A473J	CHIP R 47K J 1/10W		
R14			RK73FB2A103J	CHIP R 10K J 1/10W		
R18			RK73FB2A151J	CHIP R 150 J 1/10W		
R19			R92-0670-05	CHIP R 0 OHM		

L:Scandinavia K:USA P:Canada
Y:PX(Far East, Hawaii) T:England E:Europe
Y:AAFES(Europe) X:Australia M:Other Areas

⚠ indicates safety critical components.

PARTS LIST

* New Parts
Parts without Parts No. are not supplied
Les articles non mentionnés dans le Parts No. ne sont pas fournis.
Teile ohne Parts No. werden nicht geliefert.

220M TX-RX UNIT (X57-3810-10)

Ref. No. 参照番号	Address 位置	New Parts 新	Parts No. 部品番号	Description 部品名／規格			Destination 仕向	Remarks 備考
R20			RK73FB2A122J	CHIP R	1.2K	J 1/10W		
R21			RK73FB2A471J	CHIP R	470	J 1/10W		
R22			RK73FB2A101J	CHIP R	100	J 1/10W		
R23			RK73FB2A103J	CHIP R	10K	J 1/10W		
R24			RK73FB2A473J	CHIP R	47K	J 1/10W		
R25			RK73FB2A103J	CHIP R	10K	J 1/10W		
R31			RK73FB2A394J	CHIP R	390K	J 1/10W		
R32			RK73FB2A103J	CHIP R	10K	J 1/10W		
R33 ,34			R92-0670-05	CHIP R	0 OHM			
R35			RK73FB2A222J	CHIP R	2.2K	J 1/10W		
R36			RK73FB2A101J	CHIP R	100	J 1/10W		
R37			R92-0670-05	CHIP R	0 OHM			
R38			RK73FB2A182J	CHIP R	1.8K	J 1/10W		
R39 -41			RK73FB2A103J	CHIP R	10K	J 1/10W		
R42			RK73FB2A182J	CHIP R	1.8K	J 1/10W		
R43			RK73FB2A223J	CHIP R	22K	J 1/10W		
R44			RK73FB2A273J	CHIP R	27K	J 1/10W		
R45			RK73FB2A473J	CHIP R	47K	J 1/10W		
R46			RK73FB2A472J	CHIP R	4.7K	J 1/10W		
R47			R92-0670-05	CHIP R	0 OHM			
R49			RK73FB2A223J	CHIP R	22K	J 1/10W		
R50			RK73FB2A124J	CHIP R	120K	J 1/10W		
R52 -54			RK73FB2A473J	CHIP R	47K	J 1/10W		
R55			RK73FB2A471J	CHIP R	470	J 1/10W		
R56			RK73FB2A104J	CHIP R	100K	J 1/10W		
R57			RK73FB2A105J	CHIP R	1.0M	J 1/10W		
R59			R92-0670-05	CHIP R	0 OHM			
R60			RK73FB2A103J	CHIP R	10K	J 1/10W		
R61			RK73FB2A471J	CHIP R	470	J 1/10W		
R62			R92-0670-05	CHIP R	0 OHM			
R63 ,64			RK73FB2A222J	CHIP R	2.2K	J 1/10W		
R65 ,66			R92-0670-05	CHIP R	0 OHM			
R67			RK73FB2A122J	CHIP R	1.2K	J 1/10W		
R68			RK73FB2A220J	CHIP R	22	J 1/10W		
R69			RK73FB2A102J	CHIP R	1.0K	J 1/10W		
R71			R92-0670-05	CHIP R	0 OHM			
R73			RK73FB2A104J	CHIP R	100K	J 1/10W		
R74			R92-0679-05	CHIP R	0 OHM			
R75			RK73FB2A392J	CHIP R	3.9K	J 1/10W		
R76 ,77			R92-0670-05	CHIP R	0 OHM			
R78			R92-1213-05	CARBON	100	J 1/2W		
R79 ,80			RK73FB2A223J	CHIP R	22K	J 1/10W		
R81			RK73FB2A471J	CHIP R	470	J 1/10W		
R82			R92-0699-05	SOLID	10	1/2W		
R83 -86			R92-0670-05	CHIP R	0 OHM			
R89			RK73FB2A332J	CHIP R	3.3K	J 1/10W		
R90			RK73FB2A221J	CHIP R	220	J 1/10W		
R91			RK73FB2A473J	CHIP R	47K	J 1/10W		
R92 ,93			RK73FB2A104J	CHIP R	100K	J 1/10W		
R98			RK73FB2A223J	CHIP R	22K	J 1/10W		
R99			RK73FB2A103J	CHIP R	10K	J 1/10W		
R100			R92-0670-05	CHIP R	0 OHM			
R101			RK73FB2A102J	CHIP R	1K	J 1/10W		
VR1			R12-6429-05	TRIMMING POT.	100K			
VR2			R12-6427-05	TRIM POT.	47K			

L:Scandinavia K:USA P:Canada
Y:PX(Far East, Hawaii) T:England E:Europe
Y:AAFES(Europe) X:Australia M:Other Areas

⚠ indicates safety critical components

PARTS LIST

× New Parts
Parts without Parts No. are not supplied.
Les articles non mentionnés dans le Parts No. ne sont pas fournis.
Teile ohne Parts No. werden nicht geliefert.

220M TX-RX UNIT (X57-3810-10)

Ref. No. 参照番号	Address 位置	New Parts 新	Parts No. 部品番号	Description 部品名／規格	Destination 仕向	Remarks 備考
VR3 ,4			R12-6423-05	TRIM POT. 10K		
TS1			S79-0401-05	THERMAL SWITCH(95°C)		
D3			1SV164	DIODE		
D5			1SV164	DIODE		
D7			1SV164	DIODE		
D11 ,12			1SS184	DIODE		
D13			DAN235(K)	DIODE		
D14			1SS181	DIODE		
D15			MI407	DIODE		
D16			MI306	DIODE		
D17 ,18			1SS226	DIODE		
D19			DSA3A1	DIODE		
D20			1SV164	DIODE		
IC1			BU4094BF	IC		
IC2			LA5009M	IC		
IC5			KCD04	IC(PM IF)		
IC7			KCA04	IC(MIC AMP)		
IC8		*	KCB15	IC(DRIVE)		
IC9			KCC04	IC(APC)		
IC10			MS7724	IC(POWER MODULE)		
IC11		*	KCH08	IC(220PLL-VCO)		
Q1 ,2			3SK184(S)	FET		
Q3			2SC2714(Y)	TRANSISTOR		
Q10			2SA1362(Y)	TRANSISTOR		
Q11			2SB1119S	TRANSISTOR		
Q12			DTC144WK	DIGITAL TRANSISTOR		
Q13 ,14			2SC2712(Y)	TRANSISTOR		
Q15 -17			DTC144EK	DIGITAL TRANSISTOR		
Q18			2SD1757(K)	TRANSISTOR		
Q19			2SK208(Y)	FET		
Q20			2SC2714(Y)	TRANSISTOR		
Q21			2SC2712(Y)	TRANSISTOR		
Q22			FMG1	TRANSISTOR		
Q23			2SD1902R	TRANSISTOR		
Q24			2SJ106(GR)	FET		

L:Scandinavia K:USA P:Canada
Y:PX(Far East, Hawaii) T:England E:Europe
Y:AAFES(Europe) X:Australia M:Other Areas

⚠ indicates safety critical components.
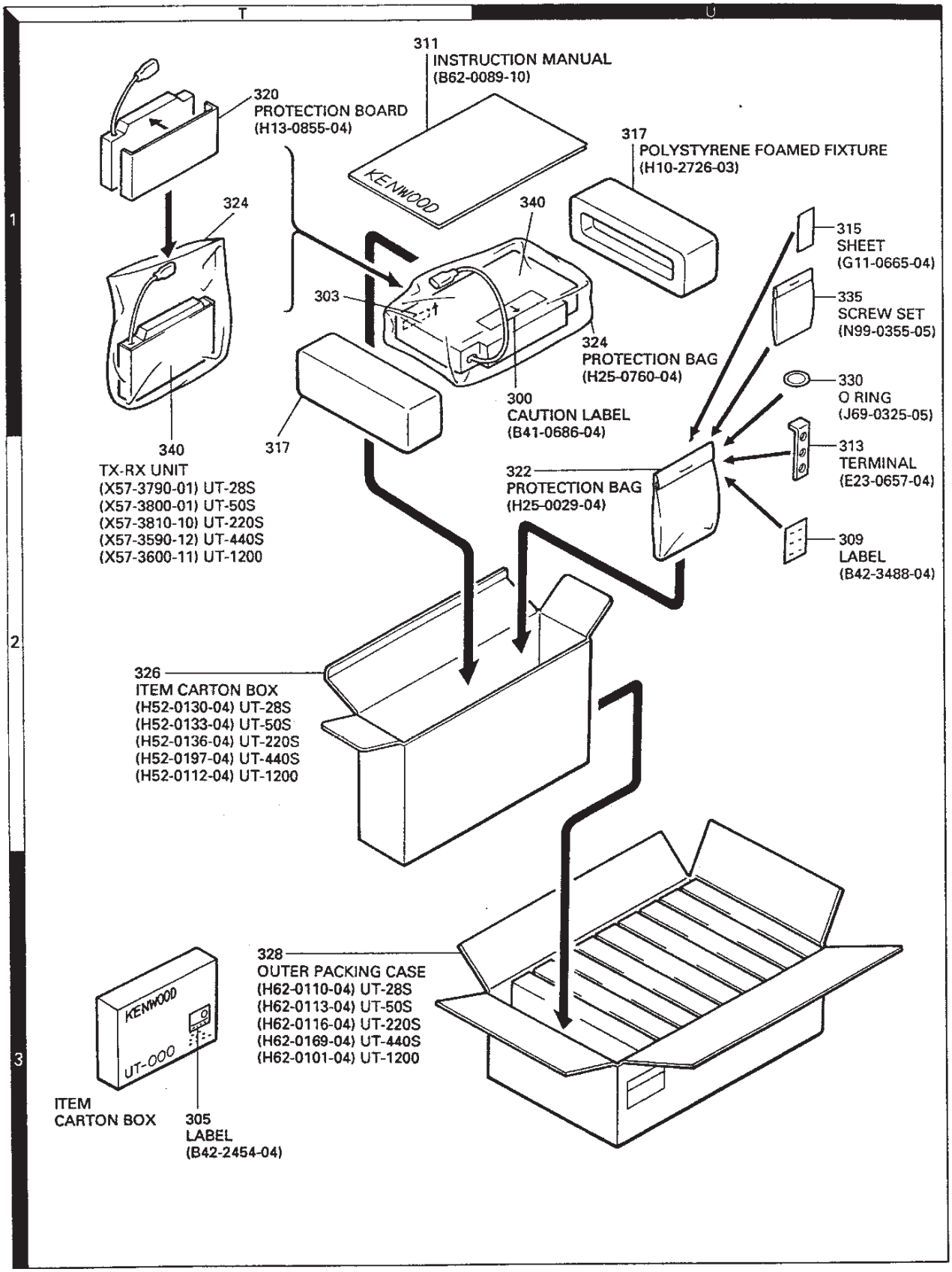
PACKING (OPTIONAL BAND UNIT)