9. EXPLODED VIEWS AND PARTS LIST

NOTES :
- *Parts marked by "* " are generally unavailable because they are not in our Master Spare Parts List.*
- *The ⚠ mark found on some component parts indicates the importance of the safety factor of the part. Therefore, when replacing, be sure to use parts of identical designation.*
- *Screw adjacent to ▽ mark on the product are used for disassembly.*
- *For the applying amount of lubricants or glue, follow the instructions in this manual. (In the case of no amount instructions, apply as you think it appropriate.)*

9.1 PACKING

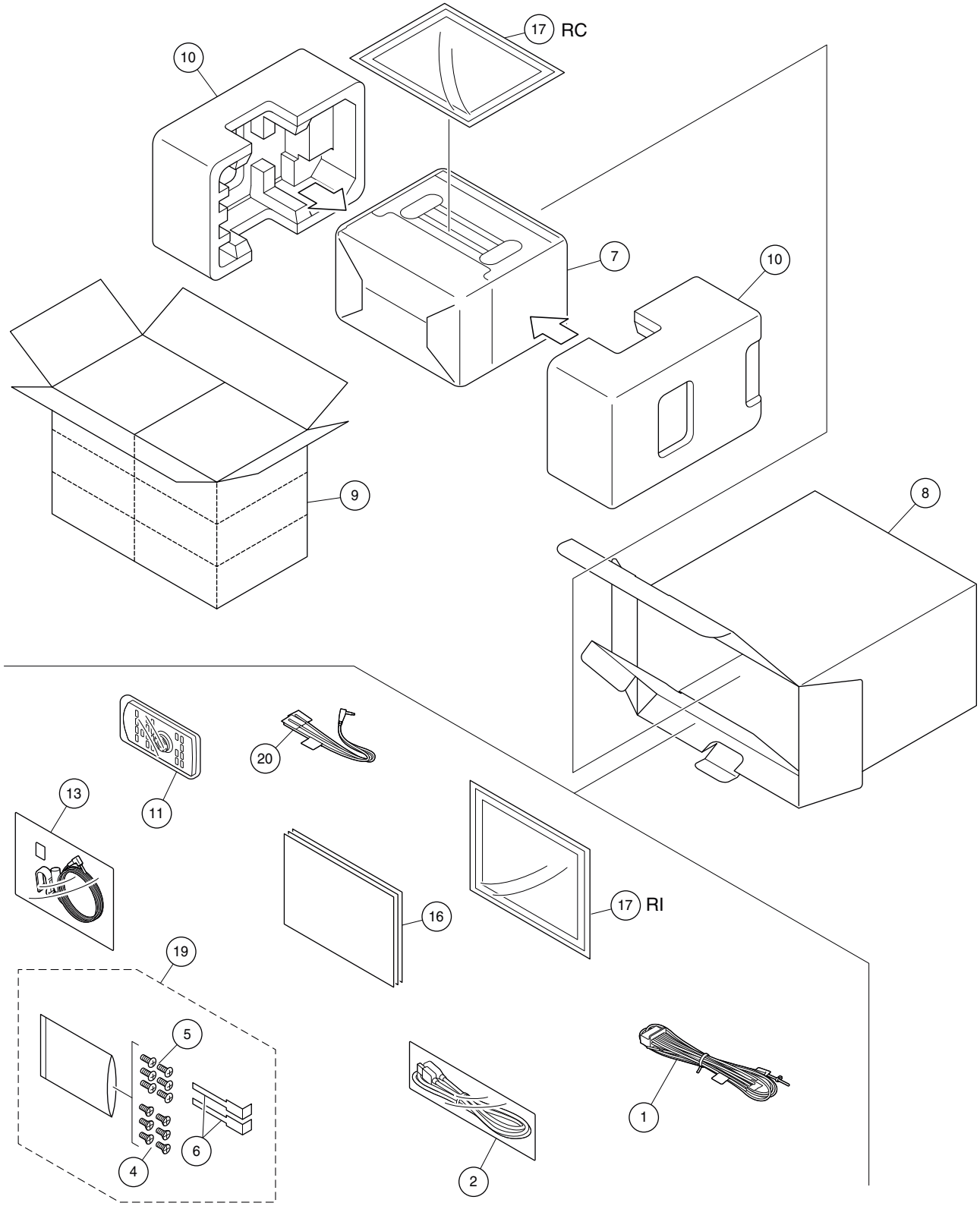

(1) PACKING SECTION PARTS LIST

Mark	No.	Description	Part No.
	1	Cord Assy	CDP1837
	2	USB Extended Cable	CDP1587
	3	•••••	
	4	Screw (M5 x 9)	See Contrast table (2)
	5	Screw (M5 x 9)	CBA2384
	6	Handle	See Contrast table (2)
	7	Cover	See Contrast table (2)
	8	Unit Box	See Contrast table (2)
	9	Contain Box	See Contrast table (2)
	10	Protector	See Contrast table (2)
	11	Card Remote Control Unit	CXE5116
	12	•••••	
	13	Microphone Assy (3 m)	CPM1113
	14	•••••	
	15	•••••	
	16-1	Quick Start Guide	See Contrast table (2)
	16-2	Installation Manual	See Contrast table (2)
*	16-3	Warranty Card	See Contrast table (2)
	16-4	Owner's Manual	See Contrast table (2)
	17	Panel	See Contrast table (2)
	18	•••••	
	19	Accessory Assy	See Contrast table (2)
	20	Cord Assy	See Contrast table (2)

(2) CONTRAST TABLE

AVH-521EX/XNUC, AVH-A2350BT/XNRC and AVH-A2350BT/XNRI are constructed the same except for the following:

Mark	No.	Description	AVH-521EX/XNUC	AVH-A2350BT/XNRC	AVH-A2350BT/XNRI
	4	Screw (M5 x 9)	CBA2383	Not used	Not used
	6	Handle	Not used	Not used	CND7909
	7	Cover	CEG1359	CEG1356	CEG1356
	8	Unit Box	CHG9732	CHG9733	CHG9742
	9	Contain Box	CHL9812	CHL9813	CHL9822
	10	Protector	CHP5517	CHP5517	CHP5547
	16-1	Quick Start Guide	CRD5164	CRD5166	Not used
	16-2	Installation Manual	CRD5165	Not used	Not used
*	16-3	Warranty Card	QRY3001	Not used	Not used
	16-4	Owner's Manual	See Contents of Web IM (3)	See Contents of Web IM (3)	CRD5176
	17	Panel	Not used	CNS9475	CNS9475
	19	Accessory Assy	*CEC7756	*CEC7757	CEW3027
	20	Cord Assy	Not used	CDP1894	CDP1894

Owner's Manual, Quick Start Guide, Installation Manual

Part No.	Language
CRD5164	English, French, Spanish (Espanol)
CRD5165	English, French, Spanish (Espanol)
CRD5166	English, Traditional Chinese, Indonesian, Thai
CRD5176	English, Arabic, Persian

(3) CONTENTS OF Web IM

Part No.	Language
*OPM_AVH521EXUC_EN_A	(UC model) English
*OPM_AVH521EXUC_FC_A	(UC model) French
*OPM_AVH521EXUC_EM_A	(UC model) Spanish (Espanol)
*OPM_AVHA2350BTRC_EG_A	(RC model) English
*OPM_AVHA2350BTRC_ZT_A	(RC model) Traditional Chinese
*OPM_AVHA2350BTRC_ID_A	(RC model) Indonesian
*OPM_AVHA2350BTRC_TH_A	(RC model) Thai

Above operation manuals are supplied in PDF files by the WEB.
Regarding the availability of paper manual, contact Pioneer Service representative in your region.

9.2 EXTERIOR (1)

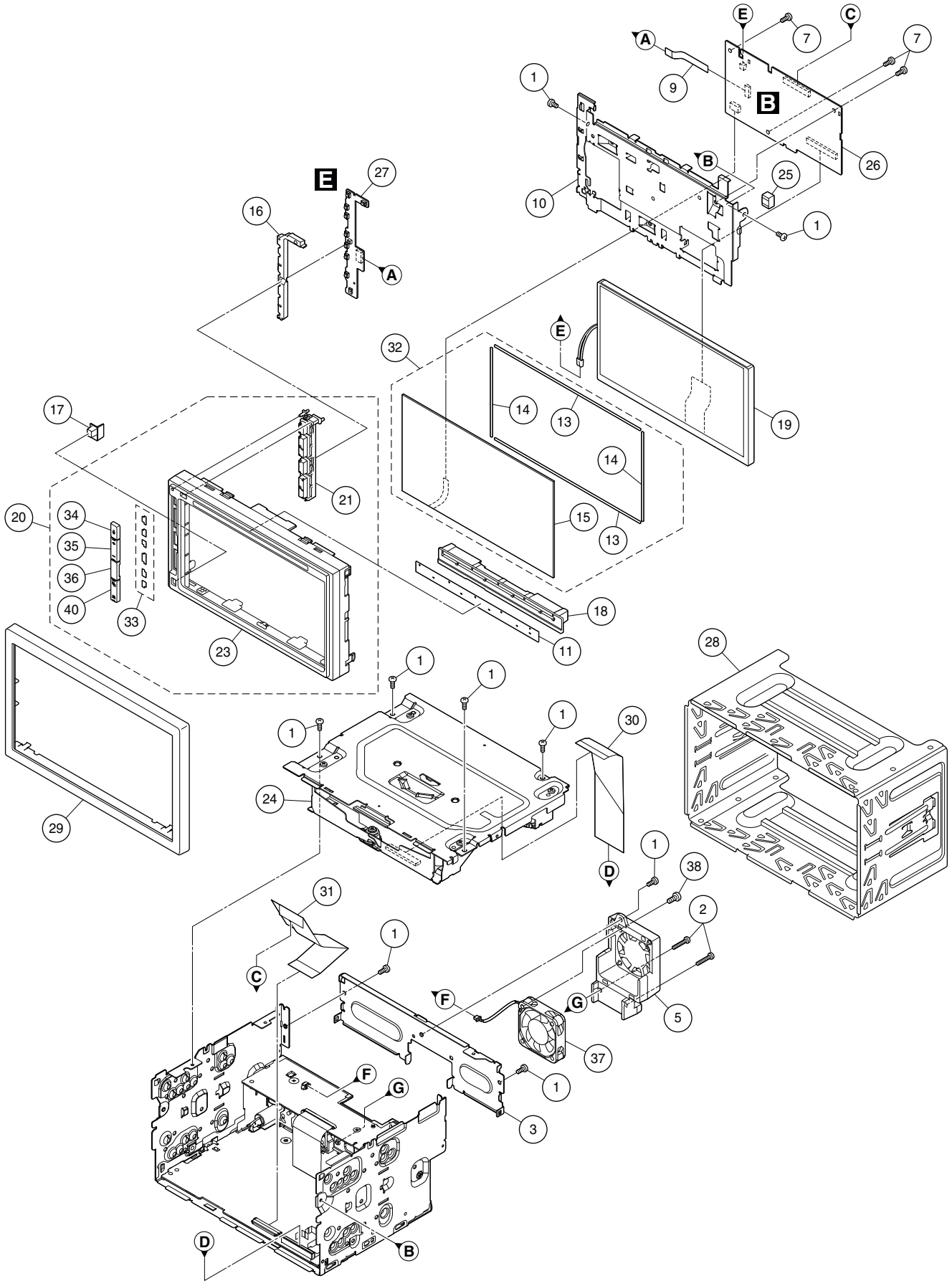

(1) EXTERIOR (1) SECTION PARTS LIST

Mark	No.	Description	Part No.
	1	Screw	BSZ26P060FTC
	2	Screw	BSZ26P160FTC
	3	Holder	CND8063
	4	•••••	
	5	Heat Sink	CNR2254
	6	•••••	
	7	Screw	BSZ26P060FTC
	8	•••••	
	9	FFC	CDD1240
	10	Holder	CND8096
	11	Cover	CNN5641
	12	•••••	
	13	Cushion	CNN5639
	14	Cushion	CNN4272
	15	Touch Panel	CSX1388
	16	Lighting Conductor	CNW4038
	17	Lighting Conductor	CNW4040
	18	Holder	CNW4047
	19	TFT LCD	CWX5008
	20	Grille Assy	See Contrast table (2)
*	21	Button (EJECT)	CAI5019
	22	•••••	
*	23	Grille	See Contrast table (2)
	24	DVD Mechanism Module (LS2.5)	CXK8400
	25	Gasket	CNN5699
	26	Service Unit (Monitor)	CXY4815
	27	Service Unit (Keyboard)	CXY4816
	28	Holder	See Contrast table (2)
	29	Panel	See Contrast table (2)
	30	FFC	CDD1296
	31	FFC	CDD1239
	32	Touch Panel Unit	CXF2340
*	33	DS Tape	CNN5642
*	34	Button (MIC)	CAI5021
*	35	Button (VOL)	CAI5022
*	36	Button (HOME)	CAI5026
	37	Fan Motor	CXM1476
	38	Screw	BPZ30P080FTC
	39	•••••	
*	40	Button (SCREEN)	CAI5024

(2) CONTRAST TABLE

AVH-521EX/XNUC, AVH-A2350BT/XNRC and AVH-A2350BT/XNRI are constructed the same except for the following:

Mark	No.	Description	AVH-521EX/XNUC	AVH-A2350BT/XNRC	AVH-A2350BT/XNRI
	20	Grille Assy	CXF3139	CXF3140	CXF3140
*	23	Grille	CNU4523	CNU4524	CNU4524
	28	Holder	Not used	Not used	CND7859
	29	Panel	Not used	Not used	CNU2645

9.3 EXTERIOR (2)

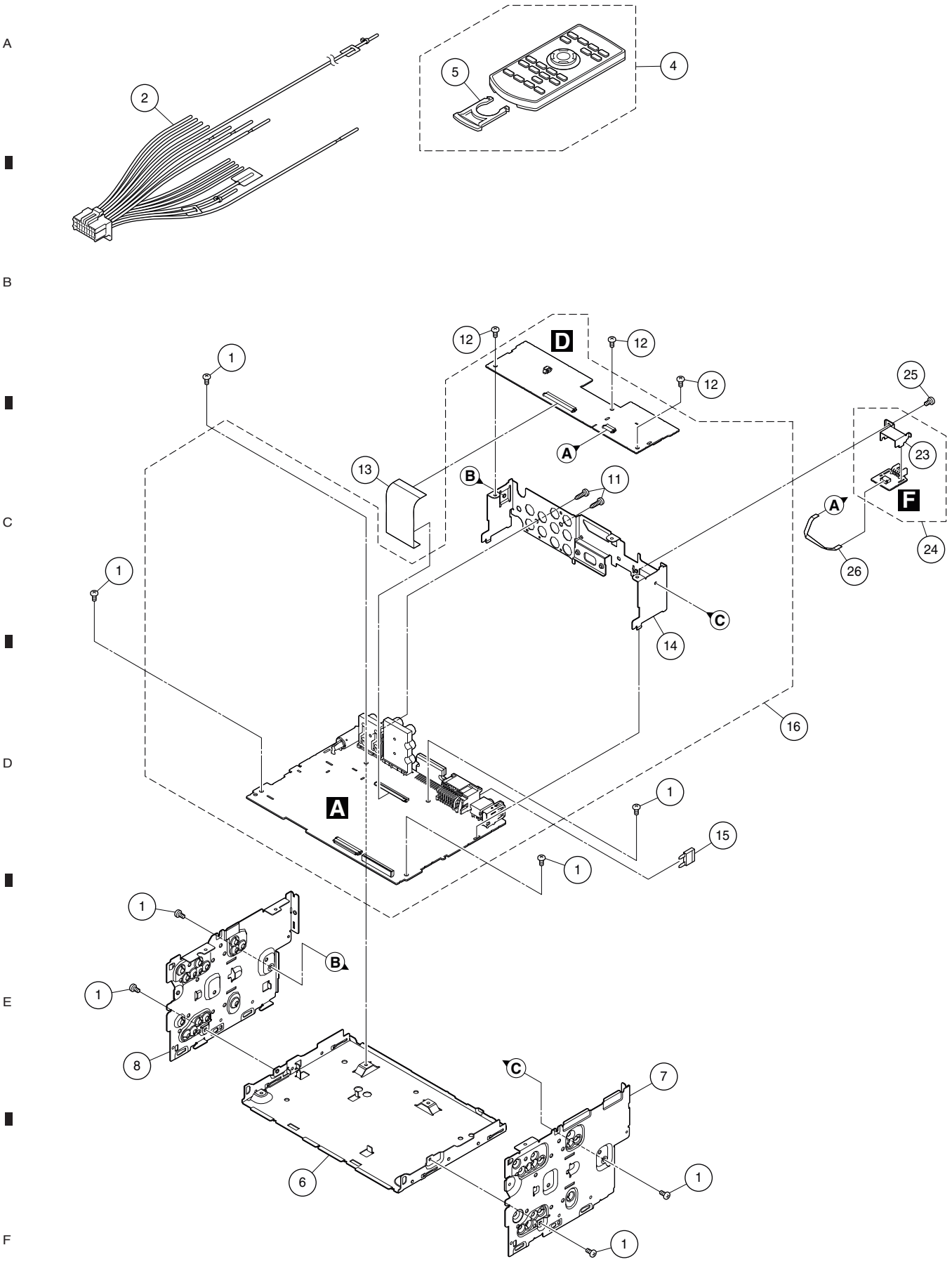

(1) EXTERIOR (2) SECTION PARTS LIST

Mark	No.	Description	Part No.
	1	Screw	BSZ26P060FTC
	2	Cord Assy	CDP1837
	3	•••••	
	4	Card Remote Control Unit	CXE5116
	5	Battery Cover	CNU1624
	6	Chassis	CNA3468
	7	Bracket	CND8061
	8	Bracket	CND8062
	9	•••••	
	10	•••••	
	11	Screw	BPZ26P080FTC
	12	Screw	BSZ26P060FTC
	13	FFC	See Contrast table (2)
	14	Holder	See Contrast table (2)
⚠	15	Fuse (10 A)	YEK5001
	16	Service Unit (Mother I/F)	See Contrast table (2)
	17	•••••	
	18	•••••	
	19	•••••	
	20	•••••	
	21	•••••	
	22	•••••	
	23	Holder	See Contrast table (2)
	24	Service Unit (I-Data)	See Contrast table (2)
	25	Screw	See Contrast table (2)
	26	FFC	See Contrast table (2)

(2) CONTRAST TABLE

AVH-521EX/XNUC, AVH-A2350BT/XNRC and AVH-A2350BT/XNRI are constructed the same except for the following:

Mark	No.	Description	AVH-521EX/XNUC	AVH-A2350BT/XNRC	AVH-A2350BT/XNRI
	13	FFC	CDD1220	CDD1219	CDD1219
	14	Holder	CND8220	CND8222	CND8222
	16	Service Unit (Mother I/F)	CXY4811	CXY4812	CXY4813
	23	Holder	CND7760	Not used	Not used
	24	Service Unit (I-Data)	CXY4841	Not used	Not used
	25	Screw	BSZ26P060FTC	Not used	Not used
	26	FFC	CDD1222	Not used	Not used

9.4 DVD MECHANISM MODULE (1)

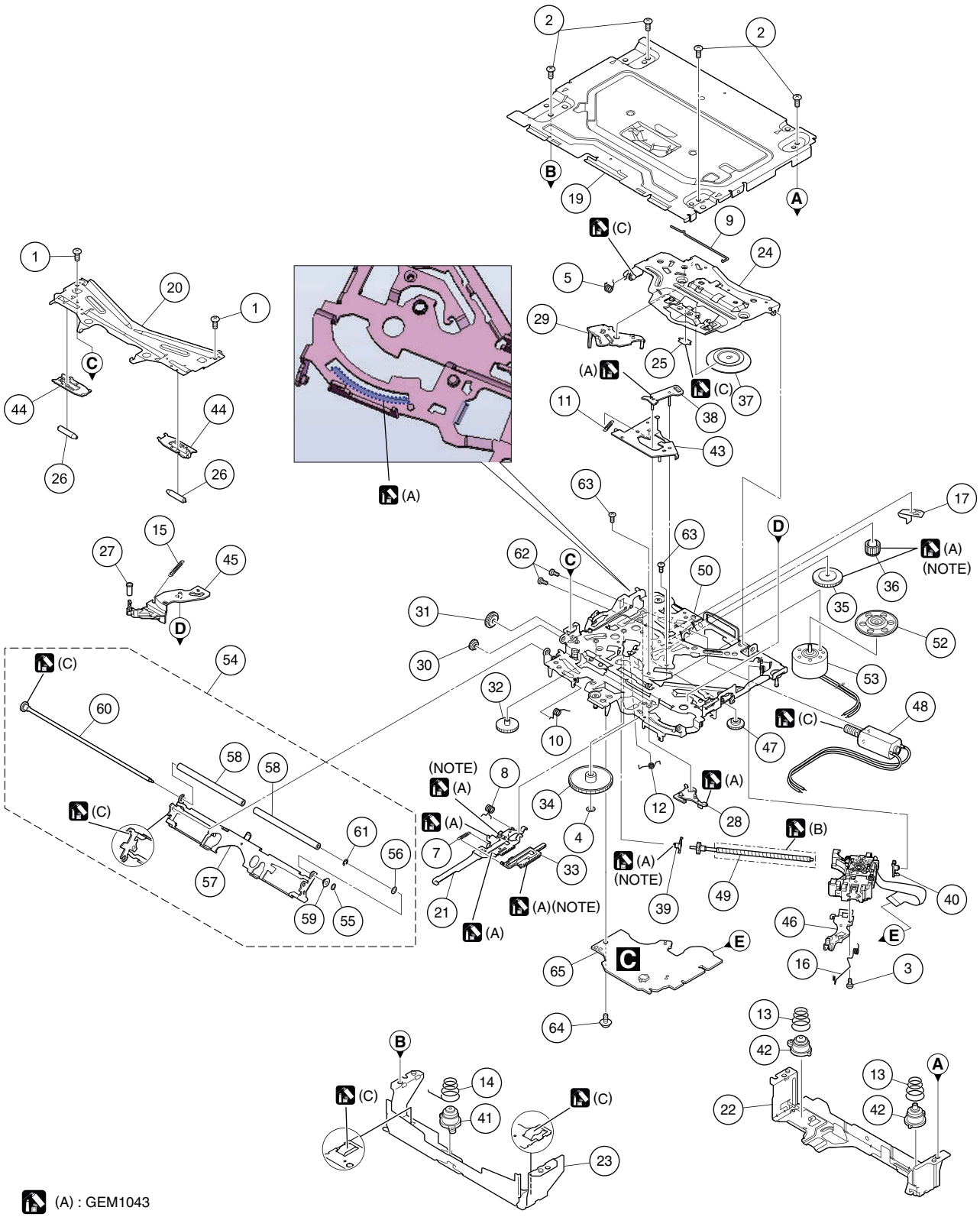

(NOTE) Apply grease to the whole part.

DVD MECHANISM MODULE (1) SECTION PARTS LIST

Mark	No.	Description	Part No.
	1	Screw	BSZ20P040FTC
	2	Screw	BSZ26P060FTC
	3	Screw (M2 x 4)	CBA1835
	4	Washer	CBF1038
	5	Spring	CBH2855
	6	•••••	
	7	Spring	CBH3010
	8	Spring	CBH3011
	9	Spring	CBH3014
	10	Spring	CBH3015
	11	Spring	CBH3016
	12	Spring	CBH3017
	13	Spring	CBH3019
	14	Spring	CBH3086
	15	Coil Spring	CBH3095
	16	Torsion Spring	CBH3096
	17	Leaf Spring	CBL1824
	18	•••••	
	19	Case	CNB4062
	20	Bracket	CND8007
	21	Lever	CND7225
	22	Bracket	CND8006
	23	Bracket	CND8005
	24	Arm	CND7224
	25	Sheet	CNN3678
	26	Roller	CNW1172
	27	Roller	CNW1175
	28	Arm	CNW1177
	29	Arm	CNW4016
	30	Gear	CNW1180
	31	Gear	CNW1181
	32	Gear	CNW1183
	33	Rack	CNW1184
	34	Gear	CNW1185
	35	Gear	CNW1186
	36	Gear	CNW1187
	37	Clamper	CNW1190
	38	Arm	CNW1192
	39	Holder	CNW1193
	40	Holder	CNW1194
	41	Damper	CNW1197
	42	Damper	CNW1198
	43	Arm	CNW1726
	44	Holder	CNW4002
	45	Arm	CNW2241
	46	Rack	CNW2265
	47	Gear	CNW2287
	48	Motor Unit	CXF1847
	49	Screw Unit	CXC8894
	50	Chassis Unit	CXE9532
	51	•••••	
*	52	Support Wheel	CNW2052
*	53	Spindle Motor	EXM5003
	54	Arm Assy	CXF1981
	55	Washer	CBF1037
	56	Washer	CBF1038
	57	Arm	CND8039
	58	Roller	CNW2500
	59	Collar	CNW2444
	60	Gear Unit	CXE8952
	61	E Ring	YE15FTC
	62	Screw	JFZ20P025FTC
	63	Screw	JGZ17P020FTC
	64	Screw (M2 x 5)	EBA1028
	65	DVD Core Unit	CWX4609

Pickup, Spindle Motor and Support Wheel are not available as service parts, because they need adjustment by special equipment after replacing.

12. ELECTRICAL PARTS LIST

NOTE:

- *Parts whose parts numbers are omitted are subject to being not supplied.*
- *The part numbers shown below indicate chip components.*
  Chip Resistor
  RS1/○S○○○J,RS1/○○S○○○J
  Chip Capacitor (except for CQS.....)
  CKS....., CCS....., CSZS.....
- *Parts marked by " * " are generally unavailable because they are not in our Master Spare Parts List.*
- *The ⚠ mark found on some component parts indicates the importance of the safety factor of the part. Therefore, when replacing, be sure to use parts of identical designation.*
- *The expression of the unit in this manual is shown by u instead of µ. Please do not make a mistake.*

Circuit Symbol and No. **Part No.**

A: AVH-521EX/XNUC

B: AVH-A2350BT/XNRC

C: AVH-A2350BT/XNRI

Service Unit (Mother I/F)
Consists of
Mother PCB
Interface PCB

A D

Unit Number : CXY4811 (A)
Unit Number : CXY4812 (B)
Unit Number : CXY4813 (C)
Unit Name : Service Unit (Mother I/F)

MISCELLANEOUS

IC	101	Regulator IC	NJW4181U3-33B
IC	111	Regulator IC	NJW4184DL3-08A
IC	141	Regulator IC	MM3411A33N
IC	161	Regulator IC	RP108J081D-AE
IC	231	Regulator IC	MM1856A50N
IC	271	Regulator IC	MM1856A58N
IC	304	Regulator IC	MM3479A33P
IC	351	DC/DC CONV IC	KBD9876EFJ
IC	401	IC	AN33012UA
IC	451	DC/DC CONV IC	MM3630BR
IC	501	DC/DC CONV IC	TLV62065TDSGQ1
*IC	601	Flash Blank UC IC	MN103LFA5RXW
IC	901	U-PRO IC	MN2KSC100M
IC	1101	CONV IC	AK5720VT
IC	1191	IC	337S3959
IC	1301	Software Unit (A)	CVQ1284
IC	1301	Software Unit (B, C)	CVQ1285
IC	1321	Flash Memory IC (A)	W25Q64JVSSIQ
IC	1321	Flash Memory IC (B, C)	W25Q16JVSSIQ
IC	1341	Software Unit	CVQ1290
IC	1401	RAM IC	W631GG6MB-12
IC	1402	RAM IC	W631GG6MB-12
IC	1501	IC	AK4223VQ
IC	1601	OP AMP IC	NJW1240V

Circuit Symbol and No. **Part No.**

IC	1721	Logic IC	TC7SH32FUS2
IC	1901	Logic IC	TC7SZU04FUS2
IC	2101	Logic IC	TC7SZ32FUS2
IC	2451	Interface IC	STCC2540IQ
IC	4011	Variable Regulator	BA00CC0WFP
IC	4131	Buffer Logic IC (A)	TC7SH126FUS1
IC	4132	AND Logic IC (A)	MC74VHC1GT08DFG
IC	4171	AND Logic IC (A)	MC74VHC1GT08DFG
IC	4172	AND Logic IC (A)	MC74VHC1GT08DFG
IC	4201	OP AMP IC	NJU7043V
IC	8401	Tuner IC	TEF6686AHN
IC	9001	E-VOL SYS LSI	PM9015A
IC	9201	Power AMP IC	TCB501HQ
Q	3	Bipolar TR	HN1C01FUS1
Q	5	Resistor Built-IN TR	LTC014EEB
Q	6	Bipolar TR	LSCR523UB
Q	7	Bipolar TR	LSAR523UB
Q	190	Resistor Built-IN TR	LTC014EEB
Q	191	Bipolar TR	LSAR523UB
Q	401	Power MOS FET	SFT1342
Q	402	Power MOS FET	SFT1342
Q	602	Resistor Built-IN TR (B, C)	RN4982S1
Q	603	Resistor Built-IN TR (B, C)	RN4982S1
Q	604	Resistor Built-IN TR (B, C)	RN4982S1
Q	605	Resistor Built-IN TR (B, C)	RN4982S1
Q	1131	Bipolar TR	LSCR523UB
Q	1132	Bipolar TR	LSCR523UB
Q	1133	Bipolar TR	LSCR523UB
Q	1134	Bipolar TR	LSCR523UB
Q	1191	Bipolar TR	LSAR523UB
Q	1601	Resistor Built-IN TR	LTC044EEB
Q	1721	Resistor Built-IN TR	LTC043ZEB
Q	1901	Transistor	2SAR502UB
Q	1902	Resistor Built-IN TR	LTC023YEB
Q	2301	Transistor	2SD2114K
Q	2302	Resistor Built-IN TR	RN4984S1
Q	2303	Resistor Built-IN TR	RN4984S1
Q	4011	Resistor Built-IN TR	LTC014EEB
Q	4201	Bipolar TR	LSCR523UB
D	4	Diode	D1F60-5053
D	5	Diode	D1F60-5053
D	7	Zener Diode	UDZV6R2(B)
D	8	Zener Diode	UDZV6R8(B)

Circuit Symbol and No.			Part No.
D	9	Switching Diode	1SS355VM
D	10	Zener Diode	UDZV5R6(B)
D	12	Switching Diode	1SS355VM
D	14	Schottky Diode	RB080LAM-30TF
D	163	Schottky Diode	RB056LAM-40TF
D	164	Schottky Diode	RB056LAM-40TF
D	351	Schottky Diode	RB056LAM-40TF
D	401	Schottky Diode	RB056LAM-40TF
D	402	Schottky Diode	RB056LAM-40TF
D	451	Schottky Diode	RB080LAM-30TF
D	601	Schottky Diode	RB751SM-40
D	602	Schottky Diode	RB751SM-40
D	801	Zener Diode	RSB6R8SM
D	871	Zener Diode	RSB6R8SM
D	872	Zener Diode	RSB6R8SM
D	873	Zener Diode	RSB6R8SM
D	874	Zener Diode	RSB6R8SM
D	1901	Zener Diode	RSB6R8SM
D	1904	Zener Diode	RSB6R8SM
D	1905	Zener Diode	RSB6R8SM
D	2211	Zener Diode	RSB6R8SM
D	2301	Diode	RSB18V
D	2302	Diode	RSB18V
D	2303	Diode	RSB18V
D	2304	Diode	RSB18V
D	2305	Zener Diode	UDZV3R9(B)
D	2352	Diode	RSB18V
D	2353	Diode	RSB18V
D	2354	Diode	RSB18V
D	2451	Diode	EZAEG2A50AX
D	2452	Diode	EZAEG2A50AX
D	4171	Switching Diode (A)	1SS355VM
D	8451	Diode	EZAEG2A50AX
D	8452	Diode	EZAEG2A50AX
D	8453	Zener Diode	RSB6R8SM
L	3	Choke Coil 120 uH	CTH1636
L	101	Chip Beads	VTL1127
L	351	SMD SPL Inductor	CTH1678
L	401	SMD SPL Inductor	CTH1542
L	402	Choke Coil 7.0 uH	CTH1381
L	451	SMD SPL Inductor	CTH1584
L	501	Inductor	CTH1629
L	801	Inductor	CTF1645
L	802	Inductor	CTF1740
L	803	Inductor	CTF1645
L	804	SMD Ferrite Beads	CTF1869
L	1901	SMD Ferrite Beads	CTF1869
L	2103	Chip Beads	VTL1127
L	2301	Chip Beads	VTL1126
L	2302	Chip Beads	VTL1126
L	2303	Chip Beads	VTL1126
L	2304	Chip Beads	VTL1126
L	2351	Chip Beads	VTL1126
L	2352	Chip Beads	VTL1126
L	2353	Chip Beads	VTL1126
L	2354	Chip Beads	VTL1126
L	2355	Chip Beads	VTL1126
L	2356	Chip Beads	VTL1126
L	2357	Chip Beads	VTL1126
L	2401	Chip Beads	VTL1126

Circuit Symbol and No.			Part No.
L	2402	Chip Beads	VTL1126
L	2403	Chip Beads	VTL1126
L	2404	Chip Beads	VTL1126
L	2405	Chip Beads	VTL1126
L	2406	Chip Beads	VTL1126
L	2407	SMD Ferrite Beads	CTF1869
L	2451	Noise Filter	CTF1887
L	4083	Chip Beads	VTL1126
L	4084	Chip Beads	VTL1126
L	4104	Chip Beads	VTL1126
L	4105	Chip Beads	VTL1126
L	4122	Chip Beads	VTL1126
L	4123	Chip Beads	VTL1126
L	4201	Ferrite Bead	CTF1528
L	8401	SMD Ferrite Beads	CTF1893
L	8403	Inductor	LCTC150K1608
L	8405	Inductor	LCMAR27J1608
L	8409	Inductor	CTF1787
X	601	Crystal Resonator 12.500 MHz	CSS1839
X	801	Resonator 24 MHz	CSS1773
X	1901	Resonator 32.768 kHz	CSS1807
X	8401	Crystal Resonator 9.216 MHz	CSS1888
⚠ P301		Poly Switch (A)	FSMD110-24R
⚠ P301		Poly Switch (B, C)	FSMD020-R
⚠ P2201		Fuse 0.75 A	CEK1398
⚠ P2352		Poly Switch	FSMD075-24R
⚠ P2401		Poly Switch	FSMD075-24R
⚠ P4081		Poly Switch	FSMD075-24R
P	8451	Surge Absorber	IMSA-6803-01Y900
F	9001	EMI Filter	CCG1142
F	9002	EMI Filter	CCG1142
F	9201	EMI Filter	CCG1142
F	9202	EMI Filter	CCG1142
TH	801	Thermistor	CCX1084
VL	8401	Variable Coil	CTC1215
CN	2101	Connector	CKS3871
CN	2201	FFC/FPC Connector	CKS6645
CN	2251	FFC/FPC Connector (B, C)	CKS6710
CN	2252	FFC/FPC Connector (A)	CKS6703
CN	4001	FFC/FPC Connector (B, C)	CKS6645
CN	4002	FFC/FPC Connector (A)	CKS6646
CN	4011	Connector	CKS4977
CN	4171	FFC/FPC Connector (A)	CKS6634
JA	1	Connector	CKM1613
JA	2301	3.5 DIA Jack	CKN1106
JA	2351	RCA Jack	CKB1110
JA	2401	RCA Jack	CKB1113
JA	2451	USB Jack	CKN1136
JA	4081	3.5 DIA Jack	CKS6437
JA	4101	Jack	CKN1101
JA	4121	RCA Jack	CKB1106
JA	4131	Connector (A)	CKS6495
JA	8451	Antenna Jack	CKX1104
U	1901	BT Module	CWX4751

RESISTORS

R	51		RS1/4SA0R0J
R	53		RS1/16SS103J

Circuit Symbol and No.		Part No.	Circuit Symbol and No.		Part No.
R 55		RS1/16SS473J	R 607		RS1/16SS221J
R 56		RS1/16SS472J	R 608		RS1/16SS221J
R 57		RS1/16SS104J	R 609		RS1/16SS472J
R 58		RS1/16SS473J	R 610		RS1/16SS102J
R 59		RS1/4SA102J	R 611		RS1/16SS103J
R 60		RS1/16SS103J	R 612		RS1/16SS471J
R 61		RS1/16SS472J	R 613		RS1/16SS473J
R 62		RS1/4SA102J	R 614		RS1/16SS471J
R 63		RS1/16SS473J	R 615		RS1/16SS473J
R 64		RS1/16SS104J	R 618		RS1/16SS472J
R 65		RS1/16SS472J	R 619		RS1/16SS472J
R 66		RS1/4SA102J	R 625		RS1/16SS102J
R 67		RS1/16SS102J	R 626		RS1/16SS0R0J
R 68		RS1/16SS473J	R 627		RS1/16SS102J
R 69		RS1/16SS223J	R 628		RS1/16SS104J
R 70		RS1/16SS103J	R 629		RS1/16SS473J
R 161		RS1/16SS5601D	R 631		RS1/16SS121J
R 162		RS1/16SS1202D	R 632		RS1/16SS104J
R 190		RS1/16SS222J	R 633		RS1/16SS121J
R 191		RS1/16SS222J	R 635		RS1/16SS102J
R 308		RS1/16SS102J	R 636		RS1/16SS473J
R 351		RS1/16SS302J	R 640		RS1/16SS682J
R 352		RS1/16SS4702D	R 650		RS1/16SS101J
R 353		RS1/16SS1202D	R 651	(A)	RS1/16SS102J
R 354		RS1/16SS822J	R 651	(B, C)	RS1/16SS1001D
R 357		RS1/8SQ331J	R 652	(B, C)	RS1/16SS6800D
R 401		RS1/16SS561J	R 656		RS1/16SS822J
R 402		RS1/16SS1502D	R 657		RS1/16SS471J
R 403		RS1/16SS1301D	R 659		RS1/16SS473J
R 404		RS1/16SS5101D	R 660		RS1/16SS473J
R 405		RS1/16SS222J	R 661		RS1/16SS222J
R 406		RS1/16SS103J	R 665		RS1/16SS221J
R 408	11 mohm	CCN1341	R 666		RS1/16SS221J
R 409		RS1/16SS204J	R 668		RS1/16SS221J
R 410		RS1/16SS394J	R 669		RS1/16SS104J
R 411	15 mohm	CCN1328	R 678	(C)	RS1/16SS104J
R 412		RS1/16SS224J	R 679	(B)	RS1/16SS104J
R 413		RS1/16SS272J	R 683		RS1/16SS103J
R 414		RS1/16SS1101D	R 684		RS1/16SS221J
R 415		RS1/16SS1001D	R 685		RS1/16SS104J
R 416		RS1/16SS1502D	R 686		RS1/16SS103J
R 417		RS1/16SS101J	R 687		RS1/16SS221J
R 422		RS1/16SS473J	R 688		RS1/16SS104J
R 423		RS1/16SS473J	R 689		RS1/16SS104J
R 432	15 mohm	CCN1328	R 690		RS1/16SS101J
R 437		RS1/4SA331J	R 691		RS1/16SS221J
R 451		RS1/16SS123J	R 692		RS1/16SS221J
R 452		RS1/16SS3001D	R 693		RS1/16SS221J
R 453		RS1/16SS1602D	R 694		RS1/16SS104J
R 455		RS1/16SS2001D	R 695		RS1/16SS471J
R 456		RS1/16SS473J	R 696		RS1/16SS103J
R 457		RS1/16SS304J	R 698		RS1/16SS473J
R 458	100 mohm	CCN1339	R 699		RS1/16SS471J
R 461		RS1/4SA331J	R 700		RS1/16SS472J
R 502		RS1/16SS473J	R 701		RS1/16SS471J
R 505		RS1/16SS1803D	R 702		RS1/16SS472J
R 507		RS1/16SS2703D	R 703		RS1/16SS221J
R 603		RS1/16SS472J	R 706	(B, C)	RS1/16SS6800D
R 604		RS1/16SS104J	R 708		RS1/16SS473J
R 605		RS1/16SS473J	R 709	(B, C)	RS1/16SS8201D

Circuit Symbol and No.			Part No.
R	710	(B, C)	RS1/16SS8201D
R	711	(A)	RS1/16SS102J
R	711	(B, C)	RS1/16SS1001D
R	716		RS1/16SS103J
R	717		RS1/16SS101J
R	720		RS1/16SS0R0J
R	800		RS1/16SS473J
R	802		RS1/16SS183J
R	804		RS1/16SS101J
R	807	(A)	RS1/16SS473J
R	808	(A)	RS1/16SS0R0J
R	809	(A)	RS1/16SS0R0J
R	812	(A)	RS1/16SS0R0J
R	815	(A)	RS1/16SS0R0J
R	825		RS1/16SS103J
R	830		RS1/16SS121J
R	831	(A)	RS1/16SS0R0J
R	834		RS1/16SS473J
R	835		RS1/16SS473J
R	836	(A)	RS1/16SS473J
R	837		RS1/16SS473J
R	840		RS1/16SS473J
R	841		RS1/16SS473J
R	842		RS1/16SS473J
R	843		RS1/16SS473J
R	844		RS1/16SS473J
R	845		RS1/16SS103J
R	852		RS1/16SS104J
R	855		RS1/16SS473J
R	861		RAB4CQ390J
R	862		RAB4CQ390J
R	863		RAB4CQ390J
R	864		RAB4CQ390J
R	865		RAB4CQ390J
R	866		RAB4CQ390J
R	869		RS1/16SS390J
R	870		RS1/16SS101J
R	871		RS1/16SS101J
R	882		RAB4CQ390J
R	884		RS1/16SS680J
R	885		RS1/16SS271J
R	886		RS1/16SS101J
R	887		RS1/16SS101J
R	888		RS1/16SS101J
R	889		RS1/16SS101J
R	890		RAB4CQ390J
R	891		RS1/16SS473J
R	892		RS1/16SS473J
R	893		RS1/16SS222J
R	894		RS1/16SS222J
R	896		RAB4CQ103J
R	899		RAB4CQ103J
R	900		RS1/16SS104J
R	901		RS1/16SS104J
R	902		RS1/16SS104J
R	903		RS1/16SS104J
R	904		RS1/16SS105J
R	905		RS1/16SS102J
R	906		RS1/16SS2202D
R	907		RS1/16SS5601D

Circuit Symbol and No.		Part No.
R	908	RS1/16SS3301D
R	911	RS1/16SS104J
R	912	RS1/16SS104J
R	913	RS1/16SS1R0J
R	924	RS1/16SS390J
R	925	RS1/16SS104J
R	926	RS1/16SS473J
R	929	RS1/16SS104J
R	930	RS1/16SS390J
R	931	RS1/16SS390J
R	932	RS1/16SS390J
R	933	RS1/16SS2402D
R	935	RS1/16SS103J
R	936	RS1/16SS1802D
R	937	RS1/16SS6201D
R	938	RS1/10SR2400D
R	940	RAB4CQ200J
R	941	RAB4CQ200J
R	942	RAB4CQ200J
R	943	RAB4CQ200J
R	944	RAB4CQ200J
R	945	RS1/16SS200J
R	946	RS1/16SS200J
R	947	RS1/16SS200J
R	948	RS1/16SS200J
R	949	RS1/16SS200J
R	950	RS1/16SS200J
R	953	RS1/16SS101J
R	955	RS1/16SS680J
R	956	RS1/16SS101J
R	957	RS1/16SS101J
R	958	RS1/16SS680J
R	959	RS1/16SS680J
R	960	RS1/16SS680J
R	961	RS1/16SS680J
R	962	RS1/16SS101J
R	963	RS1/16SS101J
R	964	RS1/16SS101J
R	1102	RS1/16SS472J
R	1109	RS1/16SS222J
R	1110	RS1/16SS103J
R	1116	RS1/10SR0R0J
R	1117	RS1/16SS820J
R	1118	RS1/16SS0R0J
R	1119	RS1/16SS820J
R	1120	RS1/16SS820J
R	1122	RS1/16SS103J
R	1123	RS1/16SS103J
R	1124	RS1/16SS0R0J
R	1125	RS1/16SS0R0J
R	1132	RS1/16SS103J
R	1134	RS1/16SS104J
R	1135	RS1/16SS153J
R	1136	RS1/16SS471J
R	1139	RS1/16SS0R0J
R	1141	RS1/16SS103J
R	1142	RS1/16SS153J
R	1143	RS1/16SS471J
R	1144	RS1/16SS103J
R	1145	RS1/16SS153J

Circuit Symbol and No.	Part No.	Circuit Symbol and No.	Part No.
R 1146	RS1/16SS471J	R 1920	RS1/16SS103J
R 1147	RS1/16SS103J	R 1921	RS1/16SS103J
R 1148	RS1/16SS153J	R 1923	RS1/16SS103J
R 1149	RS1/16SS471J	R 1926	RS1/16SS0R0J
R 1150	RS1/16SS104J	R 1927	RS1/16SS103J
R 1151	RS1/16SS104J	R 1928	RS1/16SS103J
R 1155	RS1/16SS104J	R 1932	RS1/16SS103J
R 1156	RS1/16SS0R0J	R 1933	RS1/10SR221J
R 1157	RS1/16SS0R0J	R 1936	RS1/16SS121J
R 1158	RS1/16SS0R0J	R 1939	RS1/16SS473J
R 1172	RS1/16SS102J	R 2105	RS1/16SS471J
R 1173	RS1/16SS103J	R 2106	RS1/16SS221J
R 1174	RAB4CQ103J	R 2107	RS1/16SS221J
R 1191	RS1/16SS472J	R 2108	RS1/16SS221J
R 1192	RS1/16SS473J	R 2109	RS1/16SS221J
R 1193	RS1/16SS183J	R 2110	RS1/16SS221J
R 1195	RS1/16SS222J	R 2122	RS1/16SS473J
R 1196	RS1/16SS222J	R 2124 91 ohm	CCN1424
R 1197	RS1/16SS220J	R 2251 (A)	RS1/16SS0R0J
R 1198	RS1/16SS222J	R 2252 (A)	RS1/16SS0R0J
R 1401	RS1/16SS4700D	R 2258	RS1/16SS103J
R 1402	RS1/16SS4700D	R 2305	RS1/16SS223J
R 1403	RS1/16SS4700D	R 2306	RS1/16SS223J
R 1404	RS1/16SS4700D	R 2308	RS1/16SS103J
R 1405	RS1/16SS103J	R 2309	RS1/16SS122J
R 1406	RS1/16SS103J	R 2310	RS1/16SS152J
R 1409	RS1/16SS103J	R 2311	RS1/16SS0R0J
R 1411	RS1/16SS2200D	R 2359	RS1/16SS223J
R 1412	RS1/16SS2200D	R 2360	RS1/16SS223J
R 1413	RS1/16SS2400F	R 2408	RS1/16SS223J
R 1414	RS1/16SS2400F	R 2410	RS1/16SS223J
R 1509	RS1/16SS75R0D	R 2414	RS1/16SS223J
R 1510	RS1/16SS104J	R 2417	RS1/16SS223J
R 1511	RS1/16SS75R0D	R 2420	RS1/16SS223J
R 1512	RS1/16SS2200D	R 2423	RS1/16SS223J
R 1514	RS1/16SS750J	R 2451	RS1/16SS103J
R 1517	RS1/16SS101J	R 2452	RS1/16SS183J
R 1518	RS1/16SS101J	R 2453	RS1/16SS102J
R 1519	RS1/16SS101J	R 2454	RS1/16SS103J
R 1520	RS1/16SS101J	R 2455	RS1/16SS103J
R 1521	RS1/16SS101J	R 2551	RS1/16SS0R0J
R 1522	RS1/16SS101J	R 2552	RS1/10SR0R0J
R 1527	RS1/16SS0R0J	R 2553	RS1/10SR0R0J
R 1528	RS1/16SS0R0J	R 2554	RS1/16SS0R0J
R 1538	RS1/16SS470J	R 2555	RS1/16SS0R0J
R 1601	RS1/16SS103J	R 2556	RS1/16SS0R0J
R 1602	RS1/16SS684J	R 2557	RS1/16SS0R0J
R 1604	RS1/16SS100J	R 2558	RS1/10SR0R0J
R 1605	RS1/16SS102J	R 2559	RS1/10SR0R0J
R 1701	RS1/16SS0R0J	R 2560	RS1/10SR0R0J
R 1702	RS1/16SS103J	R 2561	RS1/10SR0R0J
R 1723	RS1/16SS683J	R 2562	RS1/10SR0R0J
R 1724	RS1/16SS683J	R 2563	RS1/10SR0R0J
R 1725	RS1/16SS221J	R 2564	RS1/16SS0R0J
R 1901	RS1/16SS0R0J	R 2565	RS1/16SS0R0J
R 1902	RS1/16SS121J	R 2570	RS1/16SS0R0J
R 1903	RS1/16SS121J	R 4011	RS1/16SS473J
R 1904	RS1/16SS121J	R 4012	RS1/16SS3601D
R 1918	RS1/16SS106J	R 4013	RS1/16SS7501D
R 1919	RS1/16SS105J	R 4014	RS1/16SS1601D

Circuit Symbol and No.	Part No.
R 4121	RS1/16SS750J
R 4142 (A)	RS1/16SS471J
R 4143 (A)	RS1/16SS223J
R 4144 (A)	RS1/16SS223J
R 4145 (A)	RS1/16SS181J
R 4146 (A)	RS1/16SS181J
R 4147 (A)	RS1/10SR822J
R 4148 (A)	RS1/10SR471J
R 4149 (A)	RS1/16SS104J
R 4151 (A)	RS1/16SS471J
R 4172 (A)	RS1/16SS101J
R 4174 (A)	RS1/16SS103J
R 4176 (A)	RS1/16SS104J
R 4178 (A)	RS1/16SS102J
R 4201	RS1/16SS0R0J
R 4202	RS1/16SS0R0J
R 4203	RS1/16SS102J
R 4204	RS1/16SS222J
R 4205	RS1/16SS332J
R 4206	RS1/16SS472J
R 4207	RS1/16SS103J
R 4208	RS1/16SS824J
R 4209	RS1/16SS563J
R 4210	RS1/16SS0R0J
R 4211	RS1/16SS0R0J
R 4212	RS1/16SS472J
R 4213	RS1/16SS102J
R 4214	RS1/16SS102J
R 4215	RS1/16SS0R0J
R 8401	RS1/16SS0R0J
R 8404	RS1/16SS103J
R 8406	RS1/16SS103J
R 8407	RS1/16SS472J
R 8408	RS1/16SS472J
R 8409	RS1/16SS101J
R 8410	RS1/16SS101J
R 8412	RS1/16SS391J
R 8413	RS1/16SS105J
R 8414	RS1/16SS105J
R 8432	RS1/10SR0R0J
R 8433	RS1/10SR0R0J
R 9058	RS1/16SS0R0J
R 9208	RS1/10SR0R0J

CAPACITORS

Circuit Symbol and No.	Part No.
C 46	CKSRYX105K16
C 48	CKSSYB102K50
C 51	CEAT472M16
C 102	CKSRYX104K50
C 103	CKSSYB104K10
C 104	CKSRYX475K6R3
C 111	CKSRYX105K25
C 112	CKSSYB104K16
C 114	CKSRYX104K50
C 115	CKSQYX475K25
C 140	CKSRYB474K16
C 141	CKSQYX106K10
C 143	CKSRYB474K16
C 161	CKSQYX106K10
C 162	CKSQYX106K10

Circuit Symbol and No.	Part No.
C 190	CKSSYB104K10
C 231	CKSRYX105K16
C 232	CKSSYX105K10
C 271	CKSRYX105K16
C 272	CKSRYX105K16
C 309	CKSSYX105K10
C 310	CKSSYX105K10
C 315	CKSSYB104K10
C 318	CKSSYB102K50
C 347	CKSQYX106K10
C 352	CKSSYB103K16
C 353	CKSQYX106K10
C 356	CKSSYB473K16
C 357	CKSSYB103K16
C 358	CKSYX106K35
C 359	CKSSYB103K50
C 362 47 uF	CCG1256
C 401	CKSSYB102K50
C 402	CKSSYB223K16
C 403	CCSSCH8R0D50
C 404	CCSSCH8R0D50
C 405	CKSSYB223K16
C 406	CKSSYB152K50
C 407	CKSSYB102K50
C 408	CKSSYB104K16
C 409	CKSYX226M16
C 410	CKSYX226M16
C 413	CKSRYB473K50
C 414	CKSSYB102K50
C 416	CKSSYB104K10
C 419	CKSSYB104K16
C 420	CKSSYB103K16
C 421	CKSSYB104K10
C 422	CKSRYX105K16
C 425	CKSYX226M16
C 426	CKSYX226M16
C 427	CKSSYB104K16
C 428	CKSSYB102K50
C 433	CKSYX106K35
C 436	CKSYX106K35
C 451	CKSSYB153K16
C 452	CKSSYB222K50
C 454	CKSSYB331K50
C 455	CKSSYX105K10
C 456	CKSRYX104K50
C 457	CKSYX226M16
C 458	CKSRYX225K10
C 459	CEVW101M16
C 460	CKSRYB224K16
C 461	CEVW470M16
C 462	CKSYX106K35
C 465	CKSSYX105K10
C 502	CKSQYX106K10
C 503	CCSSCH220J50
C 504	CKSQYX106K10
C 505	CKSSYB103K16
C 602	CCSSCH100D50
C 603	CCSSCH120J50
C 604	CKSSYX105K10
C 605	CKSSYB104K10

Circuit Symbol and No.	Part No.	Circuit Symbol and No.	Part No.
C 606	CKSRYX105K16	C 928	CKSSYB104K10
C 607	CKSSYB104K10	C 929	CKSSYB104K10
C 608	CKSSYB104K10	C 930	CKSSYB104K10
C 609	CKSSYB104K10	C 931	CCSSCH100D50
C 610	CKSSYB104K10	C 932	CKSSYB104K10
C 611	CKSSYX105K10	C 933	CKSSYX105K10
C 615	CKSSYB104K10	C 934	CKSSYX105K10
C 616	CKSSYX105K10	C 935	CKSSYX105K10
C 620	CKSSYB104K10	C 936	CKSSYX105K10
C 621	CKSSYB103K16	C 937	CKSSYX105K10
C 622	CCSSCH102J50	C 938	CKSSYX105K10
C 623	CKSSYB104K10	C 939	CKSSYX105K10
C 624	CKSSYX105K10	C 940	CKSSYX105K10
C 625	CKSSYB104K10	C 941	CKSSYB103K16
C 626	CKSSYB104K10	C 942	CKSSYB102K50
C 627	CKSSYB104K10	C 943	CKSSYB104K10
C 628	CKSSYB104K10	C 944	CKSSYB104K10
C 629	CKSSYB104K10	C 945	CKSSYB104K10
C 630	CKSQYX226M6R3	C 946	CKSSYB104K10
C 632	CKSSYB104K10	C 947	CKSSYB104K10
C 635	CCSSCH471J50	C 948	CKSSYB104K10
C 801	CKSQYX106K10	C 949	CKSSYB104K10
C 802	CKSQYX476M6R3	C 1102	CKSSYX105K10
C 803	CKSQYX106K10	C 1104	CKSSYX474K6R3
C 807	CKSSYB104K10	C 1105	CKSQYX106K10
C 810	CKSQYX106K10	C 1106	CKSQYX106K10
C 811	CKSSYB104K10	C 1107	CKSSYB104K10
C 817	CKSSYB104K10	C 1108	CKSSYB104K10
C 818	CKSSYX105K10	C 1109	CKSRYX225K10
C 819	CKSSYX105K10	C 1131	CKSQYX106K10
C 840	CCSSCH120J50	C 1135	CKSQYX106K10
C 841	CCSSCH100D50	C 1136	CKSQYX106K10
C 860	CKSSYX105K10	C 1137	CKSQYX106K10
C 901	CKSSYB104K10	C 1148	CKSSYB104K10
C 902	CKSSYB104K10	C 1151	CCSSCH100D50
C 903	CKSSYB104K10	C 1191	CKSSYB104K10
C 904	CKSSYB104K10	C 1192	CKSSYB104K10
C 905	CKSSYB104K10	C 1193	CKSSYB103K16
C 906	CKSSYB104K10	C 1302	CKSSYB104K10
C 907	CKSSYB104K10	C 1321	CKSSYB104K10
C 908	CKSSYB104K10	C 1342	CKSSYB104K10
C 909	CKSSYB104K10	C 1352	CKSRYX225K10
C 910	CKSSYB104K10	C 1353	CKSQYX106K10
C 911	CKSSYB104K10	C 1401	CKSRYX106M6R3
C 912	CKSSYB104K10	C 1402	CKSRYX106M6R3
C 913	CKSSYB104K10	C 1403	CKSRYX106M6R3
C 914	CKSSYB104K10	C 1404	CKSRYX106M6R3
C 915	CKSSYB104K10	C 1405	CKSSYB104K10
C 916	CKSSYB104K10	C 1406	CKSSYB104K10
C 917	CKSSYB104K10	C 1407	CKSSYB104K10
C 918	CKSSYB104K10	C 1408	CKSSYB104K10
C 919	CKSSYB104K10	C 1409	CKSSYB104K10
C 920	CKSSYB104K10	C 1410	CKSSYB104K10
C 921	CKSSYB104K10	C 1411	CKSSYB104K10
C 922	CKSSYB104K10	C 1412	CKSSYB104K10
C 923	CKSSYB104K10	C 1413	CKSSYB104K10
C 924	CKSSYB104K10	C 1414	CKSSYB104K10
C 925	CKSSYB104K10	C 1415	CKSSYB104K10
C 926	CKSSYB104K10	C 1416	CKSSYB104K10
C 927	CKSSYB104K10	C 1417	CKSSYB104K10

Circuit Symbol and No.	Part No.
C 1418	CKSSYB104K10
C 1419	CKSSYB104K10
C 1420	CKSSYB104K10
C 1421	CKSSYB104K10
C 1422	CKSSYB104K10
C 1423	CKSSYB104K10
C 1424	CKSSYB104K10
C 1425	CKSSYB104K10
C 1426	CKSSYB104K10
C 1427	CKSSYB104K10
C 1428	CKSSYB104K10
C 1431	CKSSYB104K10
C 1501	CKSSYX105K10
C 1502	CKSSYX105K10
C 1503	CKSSYX105K10
C 1504	CKSSYX105K10
C 1507	CKSSYB104K10
C 1508	CKSSYB104K10
C 1510	CKSSYB104K10
C 1512	CKSSYB104K10
C 1514	CKSSYB104K10
C 1515	CKSSYB104K10
C 1516	CKSSYB104K10
C 1517	CKSSYB104K10
C 1519	CKSSYB104K10
C 1521	CKSSYB104K10
C 1523	CKSSYB104K10
C 1524	CKSQYX106K10
C 1525	CKSSYB104K10
C 1529	CKSQYX106K10
C 1530	CKSQYX106K10
C 1532	CCSSCH181J50
C 1601	CKSRYX105K25
C 1602	CKSRYX105K25
C 1603	CKSRYX105K25
C 1604	CKSRYX105K25
C 1605	CKSRYX105K25
C 1606	CKSRYX105K25
C 1607	CKSRYX105K25
C 1608	CKSRYX105K25
C 1609	CKSRYX105K25
C 1610	CKSRYX105K25
C 1612	CKSRYX105K25
C 1613	CKSRYX105K25
C 1721	CKSSYB104K10
C 1722	CKSQYX475K10
C 1901	CCSSCH100D50
C 1902	CCSSCH120J50
C 1903	CKSSYB104K10
C 1904	CKSRYX106M6R3
C 1905	CKSRYX106M6R3
C 1906	CKSSYB104K10
C 1907	CKSSYB104K10
C 1910	CKSQYX106K10
C 1912	CKSQYX106K10
C 1913	CKSSYX105K6R3
C 1914	CKSQYX476M6R3
C 1915	CKSQYX476M6R3
C 2104	CKSSYB104K16
C 2106	CCSSCH221J50

Circuit Symbol and No.	Part No.
C 2113	CKSSYB104K10
C 2114	CCSSCH390J50
C 2201	CKSQYX475K10
C 2202	CKSQYX106K10
C 2203	CEVW101M16
C 2303	CKSSYB102K50
C 2304	CKSSYB471K50
C 2305	CKSRYX225K10
C 2306	CKSSYB102K50
C 2307	CKSSYB102K50
C 2308	CCSSCH101J50
C 2351	CKSSYB472K50
C 2352	CKSRYX105K16
C 2353	CKSRYX104K50
C 2354	CKSSYB103K25
C 2355	CKSRYX225K10
C 2357	CKSSYB102K50
C 2358	CCSSCH101J50
C 2359	CKSSYB102K50
C 2360	CKSSYB102K50
C 2361	CKSSYB102K50
C 2401	CKSSYB102K50
C 2402	CKSSYB102K50
C 2403	CKSSYB102K50
C 2404	CKSSYB102K50
C 2405	CKSSYB102K50
C 2406	CKSSYB102K50
C 2407	CKSQYX475K10
C 2408	CKSQYX475K10
C 2409	CKSQYX475K10
C 2410	CKSQYX475K10
C 2411	CKSQYX475K10
C 2412	CKSQYX475K10
C 2414	CKSRYX225K16
C 2415	CKSSYB102K50
C 2416	CKSSYB102K50
C 2451	CKSQYX106K10
C 2452	CKSSYB104K10
C 4011	CKSQYB334K50
C 4014	CEVW220M16
C 4081	CKSSYB102K50
C 4082	CKSSYB102K50
C 4101	CKSSYB102K50
C 4102	CKSSYB102K50
C 4121	CKSSYB221K50
C 4122	CKSSYB102K50
C 4135 (A)	CKSSYB104K10
C 4136 (A)	CKSSYB104K10
C 4137 (A)	CKSRYX104K50
C 4172 (A)	CKSSYB104K10
C 4174 (A)	CKSSYB104K10
C 4202	CKSRYX106M6R3
C 4203	CKSSYB104K10
C 4204	CKSSYX105K10
C 4205	CKSSYB104K10
C 4206	CCSSCH101J50
C 4207	CKSRYB224K16
C 4208	CKSSYX105K10
C 4209	CCSSCH6R0D50
C 4210	CCSSCH220J50

Circuit Symbol and No.			Part No.
C	4211		CKSSYB104K10
C	4212		CKSQYX226M6R3
C	4214		CCSSCH6R0D50
C	4215		CKSSYB102K50
C	8401		CKSSYB104K16
C	8402		CKSSYB104K16
C	8403		CKSQYX106K10
C	8404		CKSQYX106K10
C	8405		CKSSYB104K16
C	8406		CKSRYX106M6R3
C	8407		CKSSYB224K6R3
C	8408		CKSSYB102K50
C	8409		CKSSYB104K16
C	8410		CKSRYX106M6R3
C	8411		CCSSCH220J50
C	8412		CCSSCH331J50
C	8415		CKSSYB104K16
C	8416		CKSRYX106M6R3
C	8418		CCSSCH102J50
C	8419		CCSSCH471J50
C	8423		CKSSYB152K50
C	8427		CCSSCH100D50
C	9002	(A)	CKSRYX105K16
C	9003	(A)	CKSRYX105K16
C	9004		CKSRYX105K16
C	9005		CKSRYX105K16
C	9006		CKSSYX105K10
C	9007		CKSSYX105K10
C	9010		CKSRYX105K16
C	9011		CKSRYX105K16
C	9015		CKSSYX105K10
C	9016		CKSRYX105K16
C	9017		CKSRYX105K16
C	9018	(A)	CKSRYX105K16
C	9019	(A)	CKSRYX105K16
C	9020		CKSSYB104K16
C	9021	100 uF/16 V	CCH1962
C	9022		CKSSYB104K16
C	9023		CEVW470M16
C	9024		CEVW470M16
C	9025		CKSSYB104K10
C	9026	10 uF	CCG1332
C	9027		CKSSYB104K10
C	9029		CEVW470M16
C	9032		CKSSYB104K16
C	9033		CKSSYB104K16
C	9034		CKSSYB472K50
C	9035		CKSSYB103K16
C	9036		CKSSYB103K16
C	9039		CCSSCH151J50
C	9040		CCSSCH151J50
C	9043		CKSRYB102K50
C	9044		CKSRYB102K50
C	9201	0.68 uF	CCE1064
C	9202		CKSRYB684K10
C	9203		CKSRYB684K10
C	9204	0.68 uF	CCE1064
C	9206	10 uF/25 V	CCH2108
C	9207	0.47 uF	CCG1328
C	9208	2.2 uF	CCG1322

Circuit Symbol and No.			Part No.
C	9209	4700 uF/16 V	CCH2085
C	9210	0.1 uF	CCG1425
C	9212		CKSRYX104K50
C	9213		CKSSYB102K50
C	9214		CKSSYB102K50
C	9215		CKSSYB102K50
C	9216		CKSSYB102K50
C	9217		CKSSYB102K50
C	9218		CKSSYB102K50
C	9219		CKSSYB102K50
C	9220		CKSSYB102K50
C	9223		CKSRYX105K16
C	9224		CKSRYX105K16
C	9225		CKSRYX105K16
C	9226		CKSRYX105K16
C	9228	0.1 uF	CCG1321
C	9229		CCSRCH101J50

B

Unit Number : CXY4815
Unit Name : Service Unit (Monitor)

MISCELLANEOUS

IC	5001	Interface IC	AK4187VN
IC	5101	Display IC	OZ527ILN
IC	5201	DC/DC CONV IC	R1294L103A
IC	5301	Logic IC	TC7SH08FUS2
IC	5401	Regulator IC	MM3411A15N
IC	5402	Interface IC	TC90207FG
Q	5051	Bipolar TR	HN1C01FUS1
Q	5052	Bipolar TR	LSCR523UB
Q	5201	Resistor Built-IN TR	LTC024EEB
Q	5202	Transistor	2SAR502UB
Q	5301	Bipolar TR	LSAR523UB
Q	5302	Bipolar TR	LSCR523UB
D	5101	Schottky Diode	RB162MM-40TF
D	5201	Schottky Diode	RB551VM-30
D	5202	Diode	RB548W
D	5204	Diode	RB548W
L	5101	Inductor	BTH1112
L	5201	SMD SPL Inductor	CTH1650
L	5301	Inductor	CTF1765
L	5302	Ferrite Bead	CTF1528
L	5303	Chip Beads	VTL1126
L	5401	Inductor	CTF1740
L	5402	Inductor	CTF1740
L	5403	Inductor	CTF1740
L	5404	Inductor	CTF1740
L	5405	Inductor	CTF1740
L	5406	Inductor	CTF1740
L	5407	Inductor	CTF1740
L	5408	Inductor	CTF1740
L	5409	Inductor	CTF1740
L	5410	Inductor	CTF1740
L	5411	Inductor	CTF1740
L	5412	Chip Beads	VTL1126
L	5413	Inductor	CTF1740
L	5414	Inductor	CTF1740

Circuit Symbol and No.			Part No.
L	5415	Inductor	CTF1740
L	5416	Inductor	CTF1740
L	5417	Inductor	CTF1740
L	5418	Inductor	CTF1740
L	5419	Inductor	CTF1740
L	5420	Inductor	CTF1740
L	5421	Inductor	CTF1740
L	5422	Inductor	CTF1740
L	5423	Inductor	CTF1740
L	5424	Inductor	CTF1740
L	5425	Inductor	CTF1740
L	5426	Inductor	CTF1740
L	5427	SMD Ferrite Beads	CTF1869
TH	5001	Thermistor	CCX1084
CN	5001	Connector (2P)	DKN1361
CN	5002	FFC/FPC Connector	CKS6645
CN	5003	FFC/FPC Connector	CKS6625
CN	5051	FFC/FPC Connector	CKS6757
CN	5301	FFC/FPC Connector	CKS6646

RESISTORS

R	5001	RS1/16SS271J
R	5002	RS1/16SS821J
R	5003	RS1/16SS271J
R	5004	RS1/16SS820J
R	5005	RS1/16SS101J
R	5006	RS1/16SS101J
R	5007	RS1/16SS101J
R	5013	RS1/16SS183J
R	5051	RS1/16SS121J
R	5052	RS1/16SS820J
R	5054	RS1/16SS121J
R	5055	RS1/16SS680J
R	5057	RS1/16SS121J
R	5058	RS1/16SS680J
R	5060	RS1/16SS332J
R	5061	RS1/16SS272J
R	5062	RS1/16SS332J
R	5101	RS1/16SS104J
R	5102	RS1/8SQ2R2J
R	5103	RS1/4S0R0J
R	5105	RS1/16SS104J
R	5106	RS1/16SS104J
R	5107	RS1/16SS102J
R	5109	RS1/16SS563J
R	5110	RS1/16SS104J
R	5111	RS1/16SS101J
R	5112	RS1/16SS102J
R	5113	RS1/16SS3302D
R	5114	RS1/16SS5601D
R	5115	RS1/16SS683J
R	5117	RS1/16SS682J
R	5201	RS1/16SS1002D
R	5202	RS1/16SS1002D
R	5203	RS1/16SS8201D
R	5206	RS1/16SS9102D
R	5207	RS1/16SS1802D
R	5208	RS1/16SS203J
R	5209	RS1/16SS104J

Circuit Symbol and No.		Part No.
R	5210	RS1/16SS103J
R	5211	RS1/16SS332J
R	5212	RS1/16SS1003D
R	5213	RS1/16SS9101D
R	5214	RS1/8SQ2R2J
R	5216	RS1/16SS8202D
R	5217	RS1/16SS6202D
R	5218	RS1/16SS1502D
R	5219	RS1/16SS472J
R	5220	RS1/16SS103J
R	5221	RS1/16SS272J
R	5222	RS1/16SS0R0J
R	5224	RS1/16SS473J
R	5225	RS1/16SS272J
R	5226	RS1/16SS0R0J
R	5327	RS1/16SS153J
R	5329	RS1/16SS105J
R	5331	RS1/16SS103J
R	5332	RS1/16SS472J
R	5333	RS1/16SS101J
R	5334	RS1/16SS123J
R	5335	RS1/16SS183J
R	5337	RS1/16SS473J
R	5338	RS1/16SS473J
R	5339	RS1/16SS473J
R	5340	RS1/16SS473J
R	5341	RS1/16SS473J
R	5343	RS1/16SS121J
R	5403	RS1/16SS101J
R	5404	RS1/16SS101J
R	5405	RS1/16SS101J
R	5406	RS1/16SS101J
R	5407	RS1/16SS101J
R	5408	RS1/16SS101J
R	5409	RS1/16SS101J
R	5410	RS1/16SS101J
R	5411	RS1/16SS101J
R	5412	RS1/16SS101J
R	5413	XRS1/16SS330J
R	5414	RS1/16SS101J
R	5415	RS1/16SS101J
R	5416	RS1/16SS101J
R	5417	RS1/16SS101J
R	5418	RS1/16SS101J
R	5419	RS1/16SS101J
R	5420	RS1/16SS101J
R	5421	RS1/16SS101J
R	5422	RS1/16SS101J
R	5423	RS1/16SS101J
R	5424	RS1/16SS1000D
R	5425	RS1/16SS1000D
R	5426	RS1/16SS1000D
R	5427	RS1/16SS1000D
R	5428	RS1/16SS1000D
R	5429	RS1/16SS101J
R	5430	RS1/16SS101J
R	5431	RS1/16SS101J
R	5432	RS1/16SS101J
R	5433	RS1/16SS101J
R	5434	RS1/16SS103J

Circuit Symbol and No.	Part No.
R 5435	RS1/16SS103J
R 5436	RS1/16SS103J
R 5437	RS1/16SS103J
R 5438	RS1/16SS103J
R 5439	RS1/16SS103J
R 5440	RS1/16SS221J
R 5443	RS1/16SS473J

CAPACITORS

Circuit Symbol and No.	Part No.
C 5001	CKSSYB104K10
C 5002	CKSSYB103K16
C 5003	CKSSYB103K16
C 5004	CKSSYB104K10
C 5005	CKSSYB104K10
C 5006	CKSSYB103K16
C 5007	CKSSYB103K16
C 5008	CKSRYX106M6R3
C 5009	CKSSYB104K10
C 5010	CKSSYB104K10
C 5013	CKSSYX105K10
C 5014	CKSSYX105K10
C 5101	CKSSYB332K50
C 5103	CKSQYX106K16
C 5106	CKSSYX105K16
C 5107	CKSSYX105K16
C 5108	CKSSYB104K16
C 5109	CKSSYX105K10
C 5110	CCSSCH101J50
C 5112	CKSYX106K35
C 5114	CKSRYB224K16
C 5201	CKSSYB224K6R3
C 5203	CKSSYX105K10
C 5204	CKSSYB224K6R3
C 5205	CKSRYB224K16
C 5206	CKSSYB682K25
C 5207	CKSSYB102K50
C 5208	CKSSYX105K16
C 5209	CKSSYX105K10
C 5210	CKSRYX105K25
C 5213	CKSRYX104K50
C 5214	CKSRYX104K50
C 5217	CKSQYX475K25
C 5218	CKSSYB682K25
C 5219	CKSRYX475K6R3
C 5220	CCSSCH101J50
C 5221	CKSSYB561K50
C 5222	CKSQYX475K25
C 5224	CKSSYB102K50
C 5301	CKSSYB102K50
C 5302	CKSSYB102K50
C 5303	CKSSYB102K50
C 5309	CKSSYB104K16
C 5311	CKSYX106K35
C 5312	CKSSYB102K50
C 5314	CKSSYB104K10
C 5315	CKSQYX106K10
C 5317	CKSSYB102K50
C 5318	CKSRYX104K50
C 5319	CKSQYB334K50
C 5321	CKSSYB102K50
C 5322	CKSSYB104K16
C 5323	CKSQYX475K25
C 5326	CKSSYB104K10
C 5327	CKSYX106K35
C 5329	CKSSYB102K50
C 5330	CKSSYB102K50
C 5331	CKSSYX105K10
C 5333	CKSSYB104K10
C 5404	CKSSYB103K16
C 5408	CKSSYB103K16
C 5412	CKSSYB104K10
C 5413	CKSSYB104K10
C 5414	CKSSYB104K10
C 5415	CKSSYB104K10
C 5416	CKSSYB104K10
C 5417	CKSSYB104K10
C 5418	CKSSYB104K10
C 5420	CKSSYX105K10
C 5421	CKSSYX105K10
C 5422	CCSSCH820J50
C 5423	CKSSYB103K16
C 5424	CKSSYB103K16
C 5425	CKSSYB104K10
C 5426	CKSSYB103K16
C 5427	CKSSYB103K16
C 5428	CKSRYX106M6R3
C 5429	CKSSYB103K16
C 5430	CKSSYB103K16
C 5431	CKSQYX225K16
C 5432	CKSSYB104K10
C 5433	CKSSYB103K16
C 5434	CKSSYB104K10
C 5435	CKSSYB103K16
C 5436	CKSSYB104K10
C 5437	CKSSYB103K16
C 5438	CKSSYB103K16
C 5439	CKSSYB103K16

C

Unit Number : CWX4609
Unit Name : DVD Core Unit

MISCELLANEOUS

IC	1002	Regulator IC	MM1886A50P
IC	1004	IC	NJM2855DL1-33
IC	1251	IC	BA5839FP
IC	1401	Flash ROM Unit	CWJ3337
IC	1402	Flash ROM Unit	CWJ3338
IC	1480	RAM IC	W9864G6KH-5
IC	1501	IC	MN2DS0018MA
IC	1953	IC	S-1135D12-A6
Q	1101	Bipolar TR	LSCR523UB
Q	1102	Bipolar TR	LSCR523UB
Q	1103	Transistor	2SAR293PGZE
Q	1104	Transistor	2SAR293PGZE
L	1501	Inductor	CTF1743
L	1511	Chip Beads	VTL1126
L	1902	Inductor	CTF1487

Circuit Symbol and No.			Part No.
L	1903	Inductor	CTF1558
L	1904	Resistor	RS1/16SS0R0J
X	1501	Crystal Resonator 27.000 MHz	CSS1823
S	1	Lever Switch	CSN1090
S	3	Lever Switch	CSN1089
F	1001	Filter	DTF1106
F	1002	EMI Filter	DTL1106
VR	1101	SMD Semi Fixed VR 6.8 kohm (B)	CCP1661
VR	1102	SMD Semi Fixed VR 15 kohm (B)	CCP1573
CN	1101	FFC/FPC Connector	CKS6776
CN	1952	Connector	CKS6025

RESISTORS

Circuit Symbol and No.		Part No.
R	1004	RS1/16SS4702F
R	1007	RS1/16SS6801F
R	1019	RS1/16SS101J
R	1025	RS1/16SS101J
R	1027	RS1/16SS101J
R	1101	RS1/16SS104J
R	1102	RS1/16SS104J
R	1103	RS1/16SS4300F
R	1104	RS1/16SS5100F
R	1105	RS1/16SS4300F
R	1106	RS1/16SS5600F
R	1109	RS1/16SS3R3J
R	1110	RS1/16SS3R3J
R	1111	RS1/10SR3R3J
R	1112	RS1/10SR3R3J
R	1113	RS1/10SR3R9J
R	1114	RS1/10SR3R3J
R	1115	RS1/10SR2R7J
R	1116	RS1/10SR2R7J
R	1117	RS1/10SR3R9J
R	1118	RS1/10SR3R9J
R	1223	RS1/16SS561J
R	1225	RS1/16SS471J
R	1251	RS1/16SS333J
R	1252	RS1/16SS473J
R	1253	RS1/16SS333J
R	1254	RS1/16SS473J
R	1255	RS1/16SS183J
R	1256	RS1/16SS153J
R	1257	RS1/16SS221J
R	1258	RS1/16SS221J
R	1401	RS1/16SS221J
R	1402	RS1/16SS104J
R	1405	RS1/16SS104J
R	1406	RS1/16SS472J
R	1480	RAB4CQ560J
R	1481	RAB4CQ560J
R	1482	RAB4CQ560J
R	1483	RAB4CQ560J
R	1484	RAB4CQ560J
R	1485	RAB4CQ560J
R	1486	RAB4CQ560J
R	1487	RAB4CQ560J
R	1488	RAB4CQ560J
R	1489	RS1/16SS560J
R	1490	RS1/16SS560J
R	1501	RS1/16SS122J
R	1503	RS1/16SS105J
R	1504	RS1/16SS121J
R	1509	RS1/16SS102J
R	1510	RS1/16SS102J
R	1512	RS1/16SS470J
R	1513	RS1/16SS203J
R	1514	RS1/16SS183J
R	1516	RS1/16SS104J
R	1517	RS1/16SS103J
R	1518	RS1/16SS103J
R	1522	RS1/16SS104J
R	1523	RS1/16SS221J
R	1524	RS1/16SS472J
R	1525	RS1/16SS103J
R	1526	RS1/16SS103J
R	1527	RS1/16SS682J
R	1528	RS1/16SS103J
R	1529	RS1/16SS103J
R	1530	RS1/16SS103J
R	1531	RS1/16SS103J
R	1533	RS1/16SS104J
R	1534	RS1/16SS221J
R	1535	RS1/16SS104J
R	1536	RS1/16SS104J
R	1537	RS1/16SS104J
R	1538	RS1/16SS104J
R	1539	RS1/16SS104J
R	1540	RS1/16SS221J
R	1541	RS1/16SS221J
R	1542	RS1/16SS103J
R	1546	RS1/16SS682J
R	1601	RS1/16SS123J
R	1602	RS1/16SS123J
R	1603	RS1/16SS1002D
R	1604	RS1/16SS105J
R	1605	RS1/16SS105J
R	1670	RS1/16SS1002D
R	1671	RS1/16SS2402D
R	1672	RS1/16SS2000D
R	1674	RS1/16SS3002D
R	1982	RS1/16SS822J
R	1983	RS1/16SS1000D
R	1990	RS1/16SS2000D
R	1991	RS1/16SS101J
R	1996	RS1/16SS2000D
R	1997	RS1/16SS101J
R	2002	RS1/16SS2000D
R	2003	RS1/16SS101J

CAPACITORS

Circuit Symbol and No.			Part No.
C	1002		CKSSYB104K16
C	1003		CKSSYB104K16
C	1004	4.7 uF	CCG1201
C	1005		CKSRYB105K16
C	1011		CKSRYB105K10
C	1015		CKSSYB102K50
C	1016		CKSSYB102K50
C	1018		CKSSYB104K10

Circuit Symbol and No.			Part No.
C	1040		CCSRCH821J50
C	1041		CCSRCH271J50
C	1101	10 uF	DCH1201
C	1104		CKSSYB104K10
C	1105		CKSSYB104K10
C	1106		CKSSYB103K16
C	1107		CKSSYB103K16
C	1108		CKSSYB103K16
C	1109		CKSRYB224K16
C	1110		CKSSYB103K16
C	1111		CKSRYB224K16
C	1112	22 uF	DCH1256
C	1113	22 uF	DCH1256
C	1210		CKSSYB104K16
C	1251		CEVW101M16
C	1252	4.7 uF	CCG1222
C	1253		CKSSYB104K16
C	1254		CKSSYB104K16
C	1255		CKSSYB104K16
C	1401		CKSSYB104K16
C	1403		CKSSYB104K10
C	1408		CKSSYB104K10
C	1410		CKSSYB104K16
C	1480		CKSSYB104K10
C	1481		CKSSYB104K10
C	1482		CKSSYB104K10
C	1484		CKSSYB104K10
C	1485		CKSSYB104K10
C	1487		CKSSYB104K10
C	1488		CKSSYB104K10
C	1489	10 uF	DCH1201
C	1490		CKSSYB102K50
C	1501	10 uF	DCH1201
C	1502	10 uF	DCH1201
C	1503		CKSSYB104K10
C	1504		CKSSYB104K10
C	1505		CKSSYB104K10
C	1506		CKSSYB104K10
C	1507		CKSSYB104K10
C	1508		CKSSYB104K10
C	1509		CKSSYB104K10
C	1510		CCSSCH120J50
C	1511		CKSSYB104K10
C	1512		CCSSCH120J50
C	1513		CKSSYB104K10
C	1514		CKSSYB104K10
C	1515		CKSSYB104K10
C	1516		CKSSYB104K10
C	1517		CKSSYB104K10
C	1518		CKSSYB104K10
C	1519		CKSSYB104K10
C	1520		CKSSYB104K10
C	1521		CKSSYB104K10
C	1522		CKSSYB104K10
C	1523		CKSSYB104K10
C	1524		CKSSYB473K16
C	1526		CKSSYB103K16
C	1528		CKSSYB471K50
C	1601		CKSSYB103K16
C	1602		CCSSCH101J50

Circuit Symbol and No.			Part No.
C	1603		CCSSCH101J50
C	1604		CCSSCH680J50
C	1605		CCSSCH680J50
C	1606		CKSSYB104K10
C	1607	10 uF	DCH1201
C	1608	4.7 uF	CCG1201
C	1609		CKSSYB104K10
C	1612		CKSSYB104K10
C	1613		CKSSYB104K10
C	1614		CKSSYB104K10
C	1615		CKSSYB104K10
C	1616		CKSSYB104K10
C	1617		CKSSYB104K10
C	1618		CCSSCH101J50
C	1619		CKSSYB562K25
C	1620		CKSSYB224K6R3
C	1621		CKSSYB224K6R3
C	1622		CKSSYB333K16
C	1623		CKSRYB105K10
C	1624		CKSSYB104K10
C	1625		CKSSYB104K10
C	1671		CKSSYB104K10
C	1673		CKSSYB104K10
C	1674		CKSSYB104K10
C	1676		CKSRYB105K10
C	1809		CKSSYB102K50
C	1954		CKSRYB105K10
C	1955		CKSSYB104K16
C	1962		CKSRYB105K10

E

Unit Number : CXY4816
Unit Name : Service Unit (Keyboard)

MISCELLANEOUS

IC	6001	IR RC REC Module	SIR8440B5
D	6001	LED	NESM026D-A21690
S	6001	Push Switch	CSG1155
S	6002	Push Switch	CSG1155
S	6003	Push Switch	CSG1155
S	6004	Push Switch	CSG1155
S	6005	Push Switch	CSG1155
S	6006	Push Switch	CSG1155
S	6007	Push Switch	CSG1155
S	6008	Push Switch	CSG1155
CN	6001	FFC/FPC Connector	CKS6757

RESISTORS

R	6001	RS1/16SS101J
R	6002	RS1/16SS392J
R	6003	RS1/16SS472J
R	6004	RS1/16SS123J
R	6005	RS1/16SS182J
R	6006	RS1/16SS682J

Circuit Symbol and No.	Part No.

CAPACITORS

C	6004	CKSRAYX106M10
C	6006	CKSSYB104K16

F

Unit Number : CXY4841 (A)
Unit Name : Service Unit (I-Data)

MISCELLANEOUS

CN	3201	Connector (A)	CKS6603
CN	3202	FFC/FPC Connector (A)	CKS6634

RESISTORS

R	3202	(A)	RS1/16SS102J