2. EXPLODED VIEWS AND PARTS LIST

*NOTES : • Parts marked by " * " are generally unavailable because they are not in our Master Spare Parts List.*

• The ⚠ mark found on some component parts indicates the importance of the safety factor of the part. Therefore, when replacing, be sure to use parts of identical designation.

• Screw adjacent to▽mark on the product are used for disassembly.

• For the applying amount of lubricants or glue, follow the instructions in this manual. (In the case of no amount instructions,apply as you think it appropriate.)

2.1 PACKING

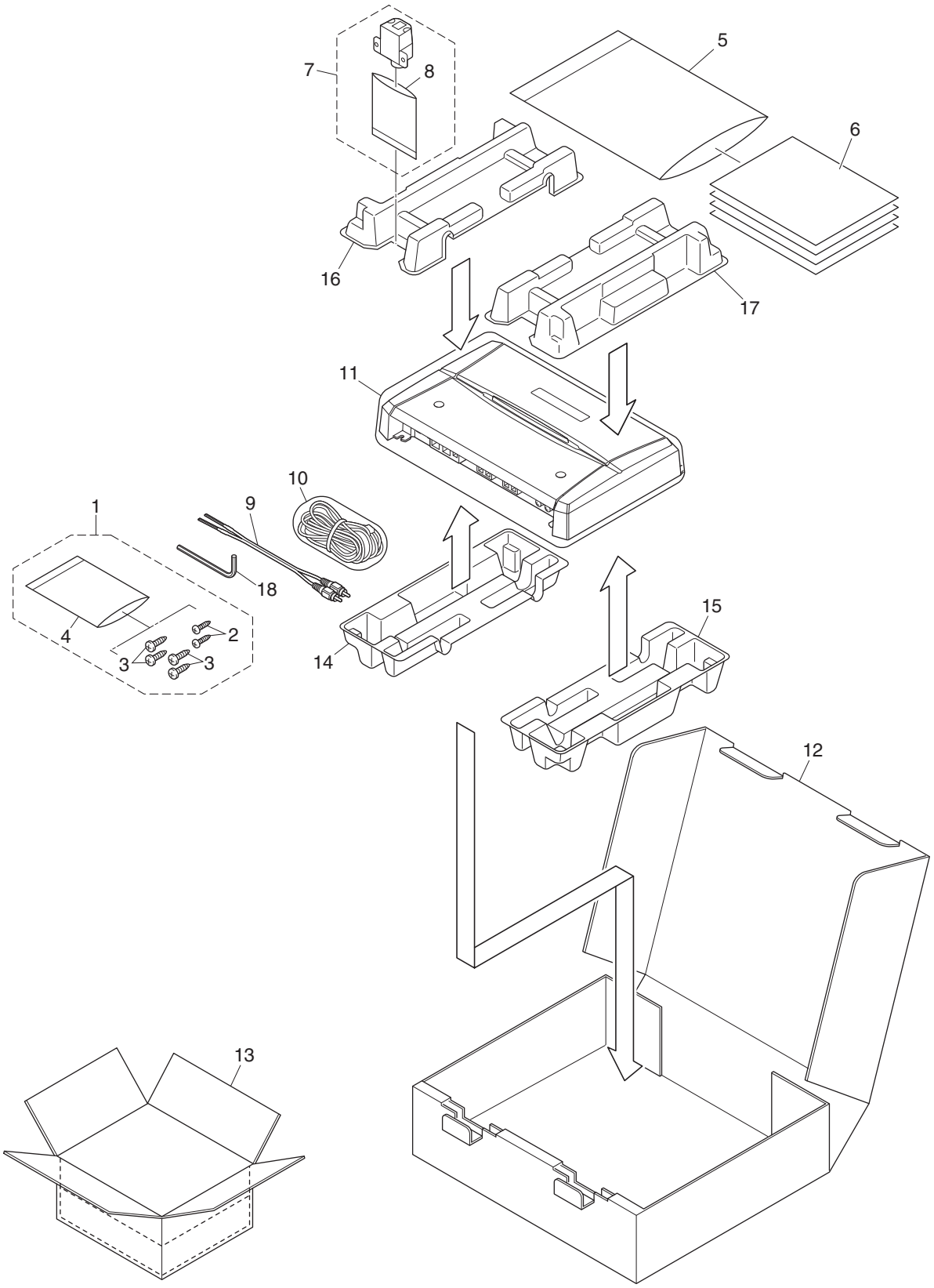

(1) PACKING SECTION PARTS LIST

Mark	No.	Description	Part No.
	1	Screw Assy	CEA5328
	2	Screw	BYC30P100FTB
	3	Screw	BYC40P180FTB
*	4	Polyethylene Sheet	CNM4338
	5	Polyethylene Bag	CEG1116
	6-1	Owner's Manual	See Contrast table(2)
	6-2	Owner's Manual	See Contrast table(2)
*	6-3	Warranty Card	See Contrast table(2)
	6-4	Caution Card	YRP5001
	7	Remote Control Assy	CXC4064
*	8	Polyethylene Bag	CEG1171
	9	Cord Assy	YDE5010
	10	Cord Assy	YDP5002
	11	Polyethylene Bag	See Contrast table(2)
	12	Carton	See Contrast table(2)
	13	Contain Box	See Contrast table(2)
	14	Protector	YHP5006
	15	Protector	YHP5007
	16	Protector	YHP5012
	17	Protector	YHP5013
	18	Shaft	YLP5001

(2) CONTRAST TABLE

PRS-D1100M/XU/UC, PRS-D1100M/XU/EW5 and PRS-D1100M/XU/ES are constructed the same except for the following:

Mark	No.	Description	PRS-D1100M/XU/UC	PRS-D1100M/XU/EW5	PRS-D1100M/XU/ES
	6-1	Owner's Manual	YRD5122	YRD5119	YRD5120
	6-2	Owner's Manual	Not used	Not used	YRD5121
*	6-3	Warranty Card	CRY1070	CRY1157	Not used
	11	Polyethylene Bag	YEG5004	YEG5003	YEG5003
	12	Carton	YHG5149	YHG5147	YHG5148
	13	Contain Box	YHL5149	YHL5147	YHL5148

Owner's Manual

Part No.	Language
YRD5122	English, French, Spanish
YRD5119	English, Spanish, German, French, Italian, Dutch, Russian
YRD5120	English, Spanish
YRD5121	Portuguese(B), Arabic

2.2 EXTERIOR

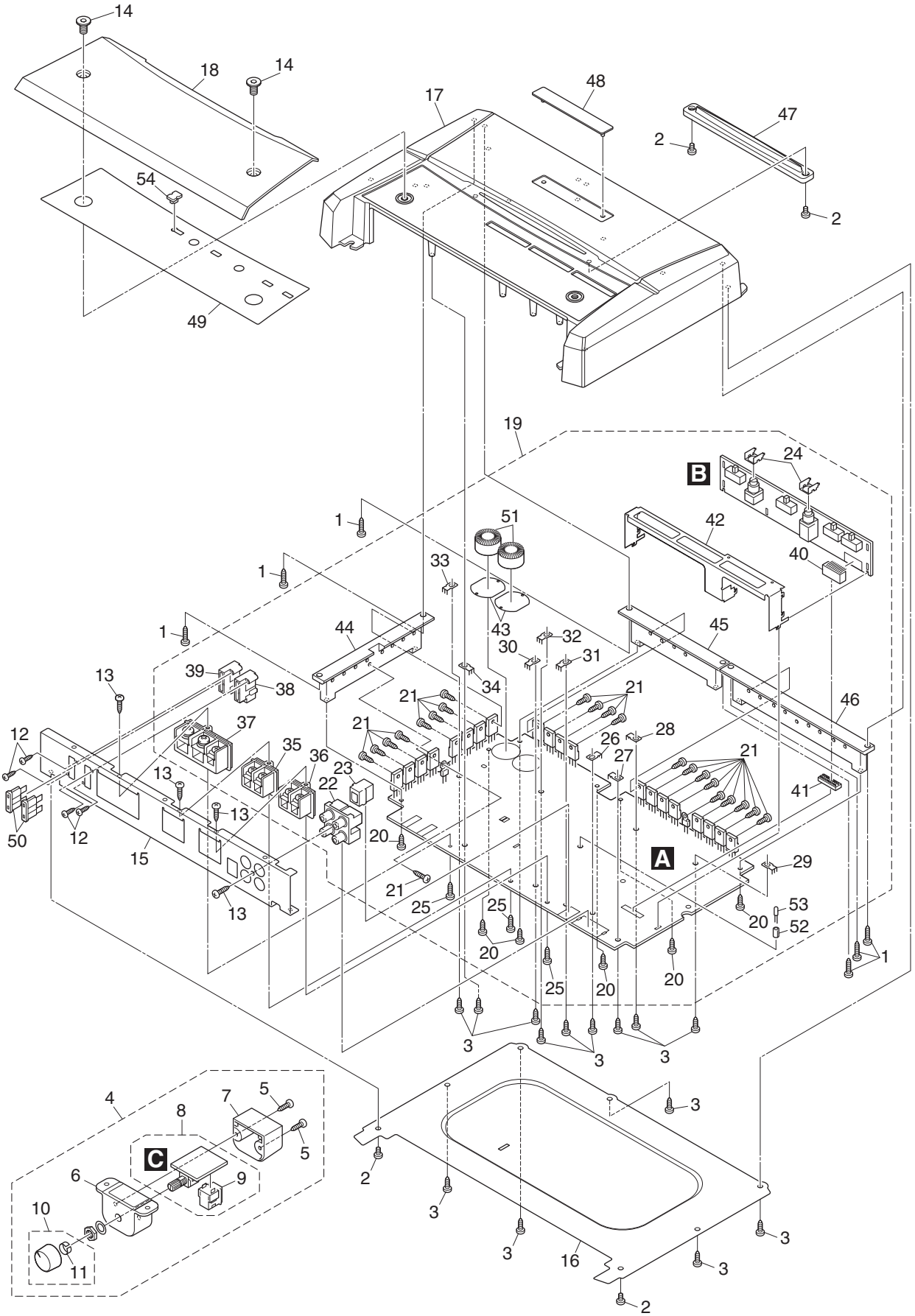

14
18
14
17
48
47
2
2
54
49
19
24
B
1
51
42
40
1
33
43
1
44
32
30
31
45
13
39
38
34
21
21
46
12
37
21
26
28
35
36
27
21
13
23
22
41
13
50
12
15
20
A
29
21
25
25
53
20
52
13
20
20
1
25
20
20
3
3
3
4
7
5
8
5
C
6
9
10
11
3
2
3
3
16
3
3
2

(1) EXTERIOR SECTION PARTS LIST

Mark	No.	Description	Part No.
	1	Screw	BBZ30P100FTB
	2	Screw	BSZ30P050FTC
	3	Screw(M3 x 8)	CBA2011
	4	Remote Control Assy	CXC4064
	5	Screw	BPZ20P100FTB
	6	Grille	CNS8140
	7	Cover	CNS8141
	8	Remote Control Unit	CWM9848
	9	Connector(CN1351)	CKS4962
	10	Knob Unit	CXC4335
	11	Spring	CBL1692
	12	Screw	PPZ20P060FTB
	13	Screw	PPZ30P100FTB
	14	Screw(M6 x 10)	YBA5002
	15	Panel	YNB5004
	16	Case	YNB5022
	17	Heat Sink	YNR5057
	18	Cover	See Contrast table(2)
	19	Amp Unit	YWH5013
	20	Screw	BBZ30P080FSN
	21	Screw(M3 x 8)	CBA2011
	22	Pin Jack(CN201)	CKB1079
	23	Connector(CN241)	CKS4962
	24	Holder	CND2466
	25	Screw	PPZ30P100FSN
	26	Terminal(CN105)	VNF1084
	27	Terminal(CN202)	VNF1084
	28	Terminal(CN301)	VNF1084
	29	Terminal(CN302)	VNF1084
	30	Terminal(CN303)	VNF1084
	31	Terminal(CN304)	VNF1084
	32	Terminal(CN601)	VNF1084
	33	Terminal(CN901)	VNF1084
	34	Terminal(CN905)	VNF1084
	35	Terminal(CN305)	YKE5001
	36	Terminal(CN306)	YKE5001
	37	Terminal(CN906)	YKE5002
	38	Fuse Holder(CN903)	YKR5001
	39	Fuse Holder(CN904)	YKR5001
	40	Connector(CN101)	YKS5008
	41	Connector(CN103)	YKS5009
	42	Holder	YND5008
	43	Insulator	YNM5045
	44	Sub Heat Sink	YNR5064
	45	Sub Heat Sink	YNR5065
	46	Sub Heat Sink	YNR5066
	47	Lighting Conductor Unit	YXA5256
*	48	Badge	See Contrast table(2)
*	49	Plate	YAH5010
⚠	50	Fuse(40 A)(FU901, FU902)	CEK1332
	51	Choke Coil(L601, L602)	YTH5007
	52	Spacer	YNS5118
	53	LED(D906)	NSPB346BS-5859
	54	Plate Unit	YXA5258

(2) CONTRAST TABLE

PRS-D1100M/XU/UC, PRS-D1100M/XU/EW5 and PRS-D1100M/XU/ES are constructed the same except for the following:

Mark	No.	Description	PRS-D1100M/XU/UC	PRS-D1100M/XU/EW5	PRS-D1100M/XU/ES
	18	Cover	YNR5062	YNR5060	YNR5060
*	48	Badge	YAH5009	YAH5007	YAH5007

5. ELECTRICAL PARTS LIST

NOTE:

- *Parts whose parts numbers are omitted are subject to being not supplied.*
- *The part numbers shown below indicate chip components.*

  Chip Resistor

  RS1/◯S◯◯◯J,RS1/◯◯S◯◯◯J

  Chip Capacitor (except for CQS.....)

  CKS....., CCS....., CSZS.....
- *The ⚠ mark found on some component parts indicates the importance of the safety factor of the part. Therefore, when replacing, be sure to use parts of identical designation.*
- *Meaning of the figures and others in the parentheses in the parts list.*

  Example) IC 301 is on the point (face A, 91 of x-axis, and 111 of y-axis) of the corresponding PC board.

  IC 301 (A, 91, 111) IC NJM2068V

Unit Number : YWH5013

Unit Name : Amp Unit

Unit Number : CWM9848

Unit Name : Remote Control Unit

Amp Unit
Consists of
Amp PCB
Control PCB

A B

Unit Number : YWH5013

Unit Name : Amp Unit

MISCELLANEOUS

Circuit Symbol and No.		Part No.
IC 111	(A,25,125) IC	NJM2068MD
IC 112	(A,25,140) IC	NJM2068MD
IC 131	(A,28,94) IC	NJM2068MD
IC 141	(A,17,64) IC	NJM2068MD
IC 151	(A,26,53) IC	NJM2068MD
IC 161	(A,18,25) IC	NJM2068MD
IC 162	(A,26,32) IC	NJM2068MD
IC 201	(A,252,56) IC	NJM2068MD
IC 221	(A,261,56) IC	NJM2068MD
IC 241	(A,222,56) IC	MAX309ESE
IC 301	(A,249,105) IC	TDA7570
IC 431	(A,143,88) IC	NJM2903M
IC 451	(A,154,88) IC	NJM2068MD
IC 901	(B,108,91) IC	UPC494GS
IC 902	(A,107,56) IC	PA2027A
Q 301	(A,201,117) Transistor	2SC4730
Q 302	(A,278,118) Transistor	2SA1826
Q 303	(A,189,125) Transistor	DTC124EK
Q 304	(A,265,127) Transistor	DTA124EKA
Q 305	(A,201,123) Transistor	2SC4730
Q 306	(A,201,129) Transistor	2SA1826
Q 307	(A,278,130) Transistor	2SC4730
Q 308	(A,278,124) Transistor	2SA1826
Q 309	(A,201,135) Transistor	2SA1826
Q 310	(A,278,136) Transistor	2SC4730
Q 311	(A,263,145) Transistor	2SC1845
Q 312	(A,263,136) Transistor	2SC1845
Q 313	(A,176,140) Transistor	2SA992
Q 314	(A,176,149) Transistor	2SA992
Q 315	(A,154,184) FET	IRFI9640G
Q 316	(A,167,184) FET	IRFI9640G
Q 317	(A,183,184) FET	IRFI9640G
Q 318	(A,196,184) FET	IRFI9640G
Q 319	(A,222,184) FET	IRFI9640G
Q 320	(A,235,184) FET	IRFI640G
Q 321	(A,251,184) FET	IRFI640G
Q 322	(A,264,184) FET	IRFI640G
Q 401	(A,189,83) Transistor	DTA124EKA
Q 402	(A,174,102) Transistor	2SA1576A
Q 404	(A,174,98) Transistor	2SC4081
Q 405	(A,174,94) Transistor	2SC4081
Q 406	(A,170,94) Transistor	2SC4081
Q 407	(A,163,94) Transistor	2SA1576A
Q 408	(A,268,89) Transistor	DTC144EUA
Q 441	(A,274,86) Transistor	DTC114EK
Q 442	(A,274,90) Transistor	2SA1037K
Q 443	(A,274,94) Transistor	DTC143EK
Q 499	(B,131,74) Transistor	DTC114TUA
Q 601	(A,76,184) Transistor	2SD2395
Q 602	(A,90,183) Transistor	2SB1566
Q 901	(A,7,78) Transistor	FKV550N
Q 902	(A,7,65) Transistor	FKV550N
Q 903	(A,7,52) Transistor	FKV550N
Q 904	(A,7,146) Transistor	FKV550N
Q 905	(A,7,133) Transistor	FKV550N
Q 906	(A,7,121) Transistor	FKV550N
Q 907	(B,91,88) Transistor	2SD1766
Q 908	(B,91,98) Transistor	2SB1188
Q 909	(B,98,98) Transistor	2SB1188
Q 910	(B,98,88) Transistor	2SD1766
Q 912	(B,127,90) Transistor	DTC124EK
Q 914	(B,103,69) Transistor	2SA1576A
Q 915	(B,112,65) Transistor	DTC114TUA

Circuit Symbol and No.		Part No.
Q 916	(B,119,63) Transistor	2SC4081
Q 917	(A,101,64) Transistor	DTA114EUA
Q 918	(A,85,63) Transistor	2SB1243
Q 919	(A,104,64) Transistor	DTC114TUA
Q 920	(B,119,46) Transistor	2SC4081
Q 921	(B,132,46) Transistor	DTC124EUA
Q 922	(B,124,46) Transistor	2SA1576A
Q 923	(B,128,46) Transistor	2SC4081
Q 924	(A,7,91) Transistor	FKV550N
Q 925	(A,7,159) Transistor	FKV550N
D 100	(A,219,48) Diode	UDZS16(B)
D 203	(A,245,46) Diode	ERA15-02VH
D 204	(A,249,46) Diode	ERA15-02VH
D 242	(A,226,48) Diode	UDZS16(B)
D 301	(A,227,109) Diode	MA111
D 302	(A,227,105) Diode	MA111
D 303	(A,191,121) Diode	MTZJ8R2(B)
D 304	(A,267,123) Diode	MTZJ8R2(B)
D 305	(A,263,140) Diode	MTZJ33(B)
D 306	(A,176,144) Diode	MTZJ33(B)
D 307	(A,174,168) Diode	FML22S
D 308	(A,195,168) Diode	FML22S
D 309	(A,224,169) Diode	FML22S
D 401	(A,187,91) Diode	MTZJ24(B)
D 402	(A,190,99) Diode	MTZJ30(B)
D 403	(A,167,86) Diode	MA111
D 404	(A,160,100) Diode	MTZJ24(B)
D 431	(A,144,83) Diode	MA111
D 441	(A,277,94) Diode	MA111
D 442	(A,274,101) Diode	MTZJ3R9(B)
D 443	(B,280,81) Diode	MA111
D 451	(B,154,85) Diode	1SS355
D 452	(A,155,83) Diode	1SS355
D 453	(A,153,83) Diode	1SS355
D 454	(B,152,85) Diode	1SS355
D 499	(B,156,99) Diode	MA111
D 601	(B,77,171) Diode	UDZS16(B)
D 602	(B,86,173) Diode	UDZS16(B)
D 603	(A,46,184) Diode	FML22S
D 604	(A,59,184) Diode	FML22R
D 698	(B,33,127) Diode	RR274EA-400
D 699	(B,39,126) Diode	RR274EA-400
D 903	(A,102,72) Diode	DAN202U
D 904	(A,99,72) Diode	DAN202U
D 905	(B,112,70) Diode	MA111
D 906	(A,148,97) LED	NSPB346BS-5859
D 907	(A,123,48) Diode	MA111
D 908	(B,90,54) Diode	UDZS18(B)
D 909	(A,85,54) Diode	ERA15-02VH
D 910	(B,280,61) Diode	DAN202U
D 911	(A,89,54) Diode	ERA15-02VH
D 912	(A,53,55) Diode	RM4Z-LFJ4
D 913	(B,128,37) Diode	UDZS7R5(B)
ZNR201	(B,252,30) Surge Protector	CSA30-201N
ZNR202	(B,258,30) Surge Protector	CSA30-201N
ZNR203	(B,249,30) Surge Protector	CSA30-201N
ZNR204	(B,238,30) Surge Protector	CSA30-201N
L 201	(A,278,52) Ferri-Inductor	CTF1007
L 202	(A,282,52) Ferri-Inductor	CTF1007
L 211	(A,245,57) Ferri-Inductor	CTF1007
L 301	(A,229,136) Choke Coil 18.25 µH	YTH5005
L 601	(A,34,155) Choke Coil 220 µH	YTH5007
L 602	(A,64,156) Choke Coil 220 µH	YTH5007
L 901	(A,36,59) Choke Coil 50 µH	CTH1341
T 901	(A,57,102) Transformer	YTT5005
TH901	(A,210,182) Thermistor	CCX1013
TH902	(A,18,99) Thermistor	CCX1013
TH903	(A,80,81) Thermistor	CCX1064
TH904	(A,210,132) Thermistor	CCX1064
S 101	(A,8,146) Switch(POWER MODE)	CSH1021
S 111	(A,8,123) Slide Switch(INPUT)	CSH1042
S 141	(A,8,63) Switch(SUBSONIC SELECT)	CSH1021
S 161	(A,8,19) Switch(MODE SELECT)	CSH1029
S 901	(A,93,75) Switch(BFC)	HSH-156
VR131	(A,12,91) Volume 20 kΩ(E)	CCS1266
VR161	(A,12,39) Volume 10 kΩ(A)	CCS1265
VR301	(A,222,108) Semi-fixed 10 kΩ(B)	CCP1448
⚠FU221	Fuse 3 A	CEK1286
⚠FU901	Fuse 40 A	CEK1332
⚠FU902	Fuse 40 A	CEK1332

RESISTORS

R 101	(A,9,169)	RS1/16S104J
R 111	(A,9,110)	RD1/4PU683J
R 112	(A,9,136)	RD1/4PU683J
R 113	(A,11,107)	RS1/16S471J
R 114	(B,14,148)	RS1/16S471J
R 115	(B,20,121)	RS1/16S223J
R 116	(B,20,138)	RS1/16S223J
R 117	(A,28,132)	RS1/16S1002D
R 118	(A,30,145)	RS1/16S1002D
R 119	(A,30,128)	RS1/16S1002D
R 120	(A,30,139)	RS1/16S1002D
R 121	(A,25,120)	RS1/16S1002D
R 122	(A,25,135)	RS1/16S1002D
R 123	(B,22,121)	RS1/16S1002D
R 124	(B,22,136)	RS1/16S1002D
R 125	(A,25,117)	RS1/16S222J
R 126	(A,25,132)	RS1/16S222J
R 131	(B,14,97)	RS1/16S222J
R 132	(B,14,99)	RS1/16S222J
R 133	(B,10,79)	RS1/16S222J
R 141	(A,19,70)	RS1/16S153J
R 142	(A,16,70)	RS1/16S223J
R 143	(A,18,58)	RS1/16S682J
R 144	(A,15,58)	RS1/16S473J
R 151	(A,20,49)	RS1/16S331J
R 152	(A,30,56)	RS1/16S273J
R 153	(A,20,47)	RS1/16S222J
R 154	(A,23,46)	RS1/16S473J
R 155	(A,26,47)	RS1/16S182J
R 156	(A,30,52)	RS1/16S101J
R 161	(B,23,31)	RS1/16S222J
R 162	(B,21,31)	RS1/16S391J
R 163	(A,20,30)	RS1/16S682J
R 164	(A,18,34)	RS1/16S202J
R 165	(A,23,26)	RS1/16S472J
R 166	(A,22,24)	RS1/16S472J

Circuit Symbol and No.		Part No.	Circuit Symbol and No.		Part No.
R 167	(B,27,39)	RS1/16S222J	R 339	(A,186,174)	RS1/2PMF100J
R 168	(B,24,39)	RS1/16S101J	R 340	(A,203,174)	RS1/2PMF100J
R 169	(A,27,38)	RS1/16S822J	R 341	(A,216,174)	RS1/2PMF100J
R 170	(A,25,38)	RS1/16S153J	R 342	(A,241,174)	RS1/2PMF100J
R 171	(B,19,31)	RS1/16S152J	R 343	(A,254,174)	RS1/2PMF100J
R 211	(B,251,39)	RS1/16S471J	R 344	(A,258,174)	RS1/2PMF100J
R 212	(B,252,51)	RS1/16S223J	R 345	(A,261,167)	RD1/4PU272J
R 213	(A,256,56)	RS1/16S1002D	R 346	(B,280,149)	RS1/16S121J
R 214	(A,255,62)	RS1/16S1002D	R 347	(A,202,157) 10 mΩ	YCN5005
R 215	(A,252,62)	RS1/16S1002D	R 348	(A,276,155) 10 mΩ	YCN5005
R 216	(A,248,60)	RS1/16S1002D	R 349	(A,246,165)	RS2PMF220J
R 221	(B,253,39)	RS1/16S471J	R 350	(A,136,36)	RD1/4PU473J
R 222	(A,265,59)	RS1/16S472J	R 351	(A,149,51)	RS2LMF100J
R 241	(B,223,45)	RS1/16S472J	R 352	(A,168,51)	RS2LMF100J
R 242	(A,221,47)	RS1/16S102J	R 353	(A,149,56)	RS2LMF100J
R 243	(A,224,47)	RS1/16S102J	R 354	(A,168,56)	RS2LMF100J
R 244	(A,217,49)	RS1/16S473J	R 355	(B,251,81)	RS1/16S222J
R 245	(B,223,50)	RS1/16S473J	R 357	(A,203,141)	RS2LMF151J
R 246	(A,212,66)	RS1/16S473J	R 358	(A,287,151)	RS2LMF121J
R 247	(A,218,65)	RS1/16S104J	R 401	(A,145,83)	RS1/16S473J
R 248	(A,219,65)	RS1/16S122J	R 402	(A,190,91)	RD1/4PU473J
R 249	(A,225,63)	RS1/16S471J	R 403	(A,187,99)	RD1/4PU393J
R 250	(A,227,63)	RS1/16S101J	R 404	(A,180,100)	RD1/4PU122J
R 301	(A,225,103)	RS1/16S472J	R 405	(A,177,100)	RD1/4PU223J
R 302	(A,222,112)	RS1/16S472J	R 406	(A,167,99)	RS1/2PMF822J
R 303	(A,225,110)	RS1/16S153J	R 407	(A,170,100)	RD1/4PU103J
R 304	(A,225,106)	RS1/16S203J	R 408	(A,170,86)	RD1/4PU472J
R 305	(A,238,93)	RS1/16S101J	R 409	(A,163,100)	RD1/4PU103J
R 306	(A,238,96)	RS1/16S103J	R 410	(A,174,86)	RD1/4PU822J
R 307	(A,260,123)	RS1/2PMF123J	R 411	(A,266,88)	RS1/16S101J
R 309	(A,276,111)	RD1/4PU102J	R 431	(B,146,106)	RS1/16S113J
R 310	(A,276,108)	RD1/4PU561J	R 432	(B,141,106)	RS1/16S184J
R 311	(A,239,119)	RS1/16S101J	R 433	(B,136,106)	RS1/16S163J
R 312	(B,264,112)	RS1/16S101J	R 434	(B,144,83)	RS1/16S473J
R 313	(A,189,131)	RD1/4PU183J	R 435	(B,146,83)	RS1/16S222J
R 314	(A,263,131)	RD1/4PU183J	R 436	(B,146,91)	RS1/16S222J
R 315	(B,190,114)	RS1/16S103J	R 437	(B,142,83)	RS1/16S473J
R 316	(B,264,116)	RS1/16S103J	R 438	(B,140,83)	RS1/16S163J
R 317	(A,193,130)	RS1/2PMF241J	R 439	(B,126,106)	RS1/16S152J
R 318	(A,210,121)	RS1/2PMF221J	R 440	(B,131,106)	RS1/16S204J
R 319	(A,286,121)	RS1/2PMF221J	R 441	(A,280,93)	RD1/4PU102J
R 320	(A,270,131)	RS1/2PMF241J	R 442	(A,284,101)	RD1/4PU223J
R 321	(B,269,139)	RS1/16S393J	R 443	(A,284,93)	RD1/4PU202J
R 322	(B,180,143)	RS1/16S393J	R 444	(A,281,87)	RD1/4PU222J
R 323	(A,194,146)	RS2LMF151J	R 445	(A,281,84)	RD1/4PU333J
R 324	(A,212,155)	RD1/4PU0R0J	R 451	(B,159,92)	RS1/16S563J
R 325	(A,216,155)	RD1/4PU100J	R 452	(B,157,92)	RS1/16S103J
R 326	(A,286,165)	RD1/4PU100J	R 453	(B,156,84)	RS1/16S563J
R 327	(A,282,165)	RD1/4PU0R0J	R 454	(B,152,79)	RS1/16S333J
R 328	(A,282,151)	RS2LMF121J	R 455	(B,154,92)	RS1/16S153J
R 329	(A,275,141)	RS1/2PMF223J	R 456	(B,152,92)	RS1/16S563J
R 330	(A,208,155)	RS1/2PMF4R7J	R 457	(B,150,84)	RS1/16S563J
R 331	(A,286,134)	RS1/2PMF4R7J	R 458	(B,150,92)	RS1/16S103J
R 332	(A,187,141)	RS1/2PMF223J	R 459	(A,151,82)	RS1/16S103J
R 333	(A,212,164)	RD1/4PU104J	R 498	(B,136,77)	RS1/16S101J
R 334	(A,272,167)	RD1/4PU104J	R 601	(A,79,178)	RD1/4PU222J
R 335	(B,203,156)	RS1/16S121J	R 602	(A,92,178)	RD1/4PU222J
R 336	(A,208,167)	RD1/4PU272J	R 603	(A,163,157)	RS2PMF220J
R 337	(A,164,174)	RS1/2PMF100J	R 604	(A,158,164)	RS2PMF220J
R 338	(A,181,174)	RS1/2PMF100J	R 605	(A,76,132)	RD1/2PM220J

Circuit Symbol and No.		Part No.
R 606	(A,56,137)	RD1/2PM220J
R 607	(A,67,132)	RD1/2PM220J
R 608	(A,177,109)	RD1/2PM102J
R 901	(A,24,66)	RD1/2PM220J
R 902	(A,29,120)	RD1/2PM220J
R 903	(A,16,80)	RD1/2PM121J
R 904	(A,16,68)	RD1/2PM121J
R 905	(A,16,61)	RD1/2PM121J
R 906	(A,12,146)	RD1/2PM121J
R 907	(A,16,136)	RD1/2PM121J
R 908	(A,16,127)	RD1/2PM121J
R 909	(B,90,103)	RS1/16S472J
R 910	(B,99,103)	RS1/16S472J
R 911	(B,103,101)	RS1/8S472J
R 912	(B,105,101)	RS1/8S472J
R 914	(B,114,105)	RS1/16S154J
R 915	(B,121,96)	RS1/16S273J
R 916	(B,115,100)	RS1/16S134J
R 917	(B,111,100)	RS1/16S103J
R 918	(B,120,87)	RS1/16S472J
R 919	(B,124,87)	RS1/16S472J
R 920	(B,122,87)	RS1/16S472J
R 921	(B,101,72)	RS1/16S272J
R 922	(B,99,72)	RS1/16S272J
R 923	(B,95,70)	RS1/16S272J
R 924	(B,104,73)	RS1/16S272J
R 925	(B,96,83)	RS1/16S105J
R 926	(B,114,83)	RS1/16S242J
R 927	(B,117,81)	RS1/16S0R0J
R 928	(B,115,77)	RS1/16S273J
R 929	(B,104,77)	RS1/16S153J
R 930	(B,114,81)	RS1/16S182J
R 931	(B,112,76)	RS1/16S101J
R 932	(B,111,74)	RS1/16S362J
R 933	(B,105,66)	RS1/16S223J
R 934	(B,106,63)	RS1/16S103J
R 935	(B,114,71)	RS1/16S392J
R 936	(B,102,63)	RS1/16S223J
R 937	(B,97,63)	RS1/16S223J
R 938	(A,138,70)	RD1/4PU271J
R 939	(A,141,70)	RD1/4PU271J
R 940	(A,121,54)	RD1/4PU101J
R 943	(A,125,54)	RD1/4PU472J
R 944	(A,90,63)	RD1/4PU221J
R 945	(A,93,63)	RD1/4PU152J
R 946	(A,97,63)	RS1/16S223J
R 947	(A,139,83)	RS1/16S151J
R 948	(B,114,46)	RS1/16S472J
R 949	(B,116,46)	RS1/16S0R0J
R 950	(B,118,42)	RS1/16S104J
R 951	(B,108,46)	RS1/16S682J
R 952	(B,96,48)	RS1/16S682J
R 953	(B,106,54)	RS1/16S103J
R 954	(B,135,46)	RS1/16S683J
R 955	(B,92,48)	RS1/16S0R0J
R 956	(B,124,42)	RS1/16S222J
R 957	(B,121,43)	RS1/16S472J
R 958	(B,129,40)	RS1/16S103J
R 959	(B,127,40)	RS1/16S103J
R 960	(B,122,39)	RS1/16S473J

Circuit Symbol and No.		Part No.
R 961	(A,121,35)	RD1/4PU222J
R 962	(A,16,93)	RD1/2PM121J
R 963	(A,17,146)	RD1/2PM121J
R 996	(B,121,98)	RS1/16S124J
R 997	(B,121,100)	RS1/16S203J
R 998	(B,110,106)	RS1/16S472J
R 999	(B,111,104)	RS1/16S473J

CAPACITORS

C 101	(A,17,167)	CEAT100M50
C 102	(A,17,160)	CEAT100M50
C 111	(A,18,129)	CEAT100M50
C 112	(A,18,138)	CEAT100M50
C 113	(B,15,122)	CCSRCH471J50
C 114	(B,16,148)	CCSRCH471J50
C 115	(A,18,121)	CEAT100M50
C 116	(A,18,149)	CEAT100M50
C 117	(A,23,131)	CKSRYB103K50
C 118	(A,23,146)	CKSRYB103K50
C 119	(A,30,125)	CCSRCH271J50
C 120	(A,30,142)	CCSRCH271J50
C 121	(A,25,119)	CCSRCH271J50
C 122	(A,25,134)	CCSRCH271J50
C 123	(B,22,126)	CKSRYB472K50
C 124	(B,22,141)	CKSRYB472K50
C 125	(A,28,120)	CKSRYB103K50
C 126	(A,28,135)	CKSRYB103K50
C 131	(A,8,102)	CFTNA154J50
C 132	(A,18,101)	CFTNA154J50
C 133	(A,26,100)	CKSRYB103K50
C 134	(A,29,85)	CKSRYB103K50
C 135	(A,18,82)	CFTNA154J50
C 136	(A,9,82)	CFTNA474J50
C 141	(A,18,75)	CFTNA474J50
C 142	(A,9,75)	CFTNA474J50
C 143	(A,27,74)	CFTNA474J50
C 144	(A,26,65)	CFTNA474J50
C 145	(A,15,70)	CKSRYB103K50
C 146	(A,21,60)	CKSRYB103K50
C 151	(A,8,51)	CEAT4R7M50
C 152	(A,17,52)	CFTNA224J50
C 153	(A,24,59)	CKSRYB103K50
C 154	(A,28,46)	CKSRYB103K50
C 155	(A,25,43)	CFTNA273J50
C 161	(A,20,32)	CKSRYB272K50
C 162	(A,16,31)	CKSRYB103K50
C 163	(A,20,19)	CKSRYB103K50
C 164	(A,24,24)	CKSRYB272K50
C 165	(A,27,39)	CKSRYB272K50
C 166	(A,23,38)	CKSRYB103K50
C 167	(A,28,26)	CKSRYB103K50
C 168	(A,8,31)	CFTNA223J50
C 201	(B,265,43)	CKSQYB102K50
C 202	(B,272,42)	CKSQYB102K50
C 203	(B,265,40)	CKSQYB103K50
C 204	(B,272,44)	CKSQYB103K50
C 205	(B,271,57)	CKSQYB103K50
C 206	(B,269,57)	CKSQYB102K50
C 211	(B,252,47)	CCSRCH471J50

Circuit Symbol and No.		Part No.
C 212	(A,255,46)	CEAT100M50
C 213	(A,256,52)	CKSRYB103K50
C 214	(A,255,64)	CKSRYB272K50
C 215	(A,252,64)	CKSRYB272K50
C 216	(A,249,62)	CKSRYB103K50
C 217	(A,245,65)	CKSRYB104K50
C 219	(B,242,56)	CKSQYB103K50
C 221	(A,262,46)	CEAT100M50
C 222	(A,265,56)	CKSRYB272K50
C 223	(A,265,52)	CKSRYB103K50
C 224	(A,261,62)	CKSRYB103K50
C 225	(B,242,46)	CKSQYB102K50
C 226	(B,242,44)	CKSQYB103K50
C 227	(B,237,60)	CKSQYB103K50
C 228	(B,237,58)	CKSQYB102K50
C 229	(B,214,55)	CKSQYB105K16
C 230	(B,241,42)	CKSQYB103K50
C 241	(A,220,44)	CKSQYB102K50
C 242	(A,225,44)	CKSQYB102K50
C 243	(A,217,51)	CKSRYB473K50
C 244	(A,221,51)	CKSRYB103K50
C 245	(A,215,66)	CKSRYB103K50
C 246	(A,212,65)	CKSRYB473K50
C 301	(A,233,90)	CEAT1R0M50
C 302	(A,249,86)	CFTNA104J50
C 303	(A,243,89)	CEAT100M50
C 304	(A,228,86)	CEAT100M50
C 305	(A,238,86)	CEAT100M50
C 306	(A,255,91)	CEAT100M50
C 307	(A,233,98)	CEATR22M50
C 308	(A,261,91)	CEAT1R0M50
C 309	(A,268,94)	CEAT1R0M50
C 310	(A,267,100)	CEAT100M50
C 311	(A,267,107)	CEATR47M50
C 312	(A,261,104)	CKSRYB332K50
C 313	(A,238,106)	CKSRYB103K50
C 314	(A,232,105)	CEAT101M25
C 315	(B,272,109)	CKSRYB223K50
C 316	(A,261,106)	CKSRYB332K50
C 317	(A,261,108)	CKSRYB104K50
C 318	(A,248,116)	CKSRYB332K50
C 319	(A,232,114)	CEAT101M50
C 320	(A,248,118)	CKSRYB224K16
C 321	(A,244,118)	CKSRYB332K50
C 322	(A,241,119)	CKSRYB473K50
C 323	(B,264,114)	CKSRYB473K50
C 324	(B,204,114)	CCSRCH101J50
C 325	(B,274,116)	CCSRCH101J50
C 326	(A,191,116)	CFTNA223J50
C 327	(A,267,119)	CFTNA223J50
C 328	(B,203,158)	CKSRYB224K16
C 329	(A,216,164)	CFTNA104J2A
C 330	(A,267,167)	CFTNA104J2A
C 331	(B,280,154)	CKSRYB224K16
C 332	(B,210,164)	CKSRYB682K50
C 333	(B,264,166)	CKSRYB103K50
C 334	(A,226,155) 1 µF	CCE1035
C 335	(A,226,162) 1 µF	CCE1035
C 336	(A,261,154)	CEHAZL101M2A(P45)
C 337	(A,197,155)	CFTNA104J2A

Circuit Symbol and No.		Part No.
C 338	(A,270,154)	CFTNA104J2A
C 339	(A,189,155)	CEHAZL101M2A(P45)
C 340	(A,237,156)	CQMBA561J2A
C 341	(A,252,132) 4.7 µF	CCE1036
C 342	(A,182,53)	CEAT100M2A
C 343	(A,192,53)	CEAT100M2A
C 344	(A,186,35)	CFTNA103J50
C 345	(A,163,46)	CFTNA103J50
C 346	(B,217,45)	CKSQYB103K50
C 347	(A,163,40)	CFTNA103J50
C 348	(B,219,45)	CKSQYB102K50
C 401	(A,180,91)	CEANP221M10
C 402	(A,137,102)	CEAT220M50
C 403	(A,221,86)	CEAT100M50
C 404	(A,194,92)	CFTNA104J2A
C 405	(A,195,101)	CEANP100M50
C 431	(A,138,96)	CEAT220M50
C 432	(B,148,83)	CKSRYB103K50
C 433	(A,138,87)	CKSRYB103K50
C 434	(A,128,102)	CEANP1R0M50
C 435	(A,128,96)	CEAT470M35
C 441	(A,279,101)	CEAT1R0M50
C 451	(A,159,93)	CKSRYB103K50
C 452	(A,148,87)	CKSRYB103K50
C 453	(A,162,86)	CEAT100M50
C 511	(B,242,58)	CKSQYB102K50
C 601	(A,152,167)	CFTNA104J50
C 602	(A,148,167)	CFTNA104J50
C 603	(B,88,157)	CKSRYB103K50
C 604	(B,90,165)	CKSRYB103K50
C 605	(A,83,156)	CEAT470M35
C 606	(A,94,166)	CEAT470M35
C 607	(B,75,171)	CKSRYB103K50
C 608	(B,83,174)	CKSRYB103K50
C 609	(A,81,167)	CEAT470M35
C 610	(A,88,164)	CEAT470M35
C 611	(A,175,122)	CFTNA104J2A
C 612	(A,158,149)	CFTNA104J2A
C 613	(A,122,122) 3 300 µF/71 V	CCH1703
C 614	(A,106,149) 3 300 µF/71 V	CCH1703
C 615	(A,155,122) 3 300 µF/71 V	CCH1703
C 616	(A,138,149) 3 300 µF/71 V	CCH1703
C 617	(A,71,140)	CQMA102K2E
C 618	(A,61,137)	CQMA102K2E
C 619	(A,69,136)	CQMA102K2E
C 695	(A,31,133)	CEAT470M50
C 696	(A,46,136)	CEAT470M50
C 901	(A,68,66) 6 800 µF/16 V	CCH1468
C 902	(A,68,49) 6 800 µF/16 V	CCH1468
C 903	(A,22,56)	CQMA472J50
C 904	(A,22,123)	CQMA472J50
C 906	(A,117,100)	CFTNA103J2A
C 907	(B,111,102)	CKSRYB104K50
C 908	(A,101,79)	CEAT101M16
C 909	(B,103,85)	CKSRYB103K50
C 910	(A,116,90)	CFTNA474J50
C 911	(A,111,81)	CEANP221M10
C 912	(B,106,81)	CKSRYB102K50
C 913	(B,108,82)	CKSRYB472K50
C 914	(A,107,73)	CEAT100M50

Circuit Symbol and No.		Part No.
C 915	(B,104,63)	CKSRYB103K50
C 916	(B,99,63)	CKSRYB103K50
C 917	(A,147,93)	CKSQYB104K50
C 918	(A,133,54)	CEAT471M25
C 919	(A,109,65)	CEAT220M50
C 920	(A,98,63)	CKSRYB103K50
C 921	(A,115,65)	CEAT220M50
C 922	(B,96,53)	CKSRYB103K50
C 923	(A,94,54)	CEAT101M16
C 924	(B,101,54)	CKSRYB103K50
C 925	(B,103,47)	CKSRYB223K50
C 926	(A,105,46)	CEAT100M50
C 927	(B,110,46)	CKSRYB223K50
C 928	(A,112,46)	CEAT100M50
C 929	(B,132,42)	CKSRYB105K10
C 930	(B,60,47)	CKSQYB103K50
C 931	(B,124,39)	CKSRYB103K50
C 932	(A,83,43)	CKSQYB102K50
C 933	(B,118,39)	CKSQYB102K50
C 934	(A,83,41)	CKSQYB103K50
C 935	(B,116,39)	CKSQYB103K50
C 936	(A,83,38)	CKSQYB104K50
C 937	(B,113,39)	CKSQYB104K50

C

Unit Number : CWM9848
Unit Name : Remote Control Unit

MISCELLANEOUS

Q 1351	Transistor	DTC114EUA
Q 1352	Transistor	DTC114EUA
D 1351	Diode	DAN202U
D 1352	Diode	DAN202U
D 1366	Diode	UDZS16(B)
D 1367	Diode	UDZS16(B)
S 1351	Rotary Switch(BASS BOOST CONTROL)	CSD1128

RESISTORS

R 1351		RS1/16S103J
R 1352		RS1/16S102J
R 1353		RS1/16S103J
R 1354		RS1/16S102J
R 1359		RS1/16S102J