2. EXPLODED VIEWS AND PARTS LIST

*NOTES : • Parts marked by " * " are generally unavailable because they are not in our Master Spare Parts List.*
• The ⚠ mark found on some component parts indicates the importance of the safety factor of the part. Therefore, when replacing, be sure to use parts of identical designation.
• Screw adjacent to▽mark on the product are used for disassembly.
• For the applying amount of lubricants or glue, follow the instructions in this manual. (In the case of no amount instructions,apply as you think it appropriate.)

2.1 PACKING

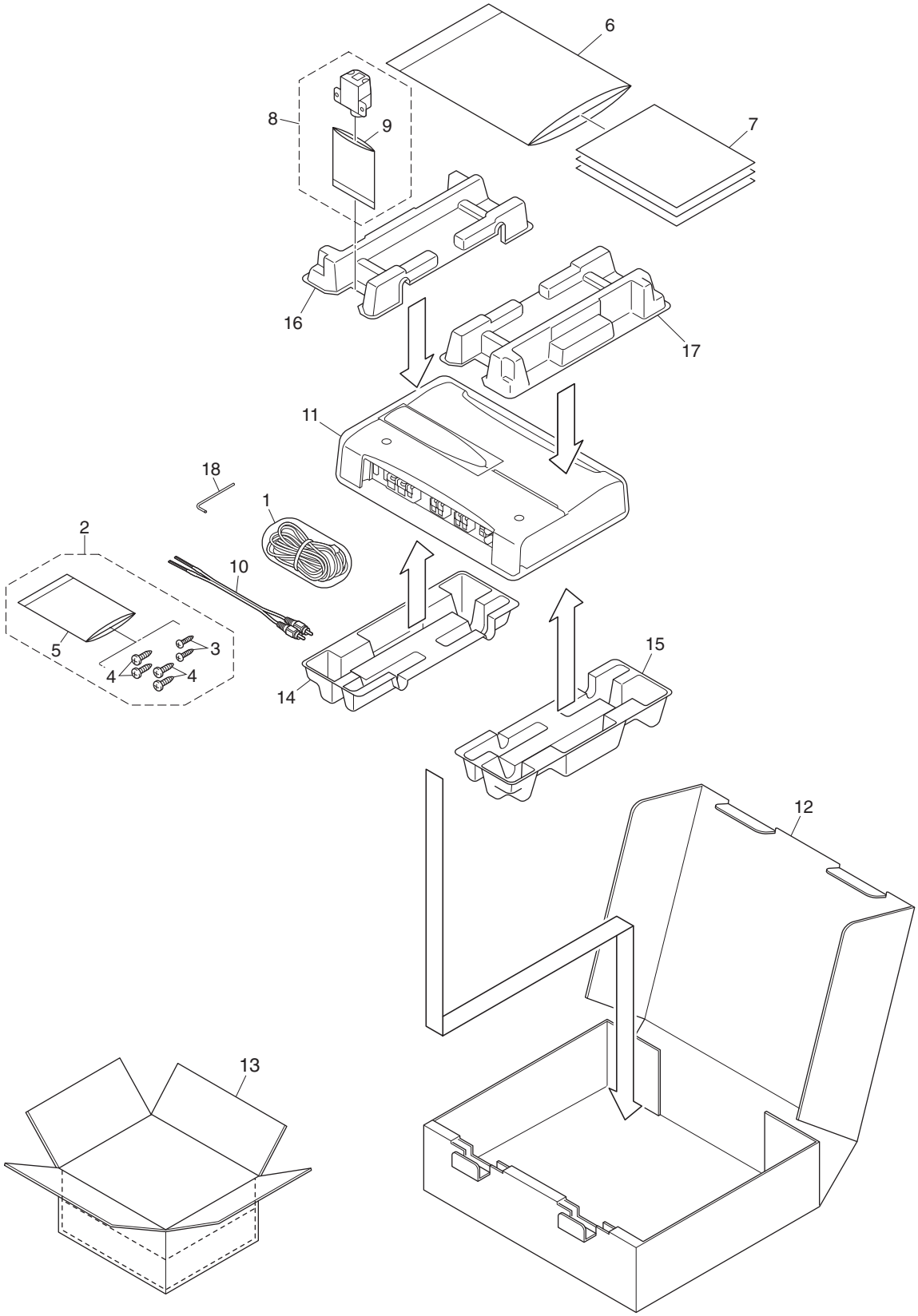

(1) PACKING SECTION PARTS LIST

Mark	No.	Description	Part No.
	1	Cord Assy	CDE7804
	2	Screw Assy	CEA5328
	3	Screw	BYC30P100FTB
	4	Screw	BYC40P180FTB
*	5	Polyethylene Sheet	CNM4338
	6	Polyethylene Bag	CEG1116
	7-1	Owner's Manual	See Contrast table(2)
	7-2	Owner's Manual	See Contrast table(2)
	7-3	Caution Card	YRP5001
*	7-4	Warranty Card	See Contrast table(2)
	8	Remote Control Assy	CXC4064
*	9	Polyethylene Bag	CEG1171
	10	Cord Assy	YDE5010
	11	Polyethylene Bag	See Contrast table(2)
	12	Carton	See Contrast table(2)
	13	Contain Box	See Contrast table(2)
	14	Protector	YHP5006
	15	Protector	YHP5007
	16	Protector	YHP5012
	17	Protector	YHP5013
	18	Shaft	YLP5001

(2) CONTRAST TABLE

PRS-D2000T/XU/UC , PRS-D200/XU/EW5 , PRS-D2000T/XU/ES and PRS-D2000T/XU/CN5 are constructed the same except for the following:

Mark	No.	Description	PRS-D2000T/XU/UC	PRS-D200/XU/EW5	PRS-D2000T/XU/ES	PRS-D2000T/XU/CN5
	7-1	Owner's Manual	YRD5065	YRD5063	YRD5064	YRB5025
	7-2	Owner's Manual	Not used	Not used	YRD5069	Not used
*	7-4	Warranty Card	CRY1070	CRY1157	Not used	ARY7046
	11	Polyethylene Bag	YEG5004	YEG5003	YEG5003	YEG5003
	12	Carton	YHG5089	YHG5098	YHG5087	YHG5099
	13	Contain Box	YHL5080	YHL5089	YHL5078	YHL5090

Owner's Manual

Part No.	Language
YRD5065	English, French, Spanish
YRD5063	English, Spanish, German, French, Italian, Dutch, Russian
YRD5064	English, Spanish
YRD5069	Arabic, Portuguese(B)
YRB5025	Casual Chinese

2.2 EXTERIOR

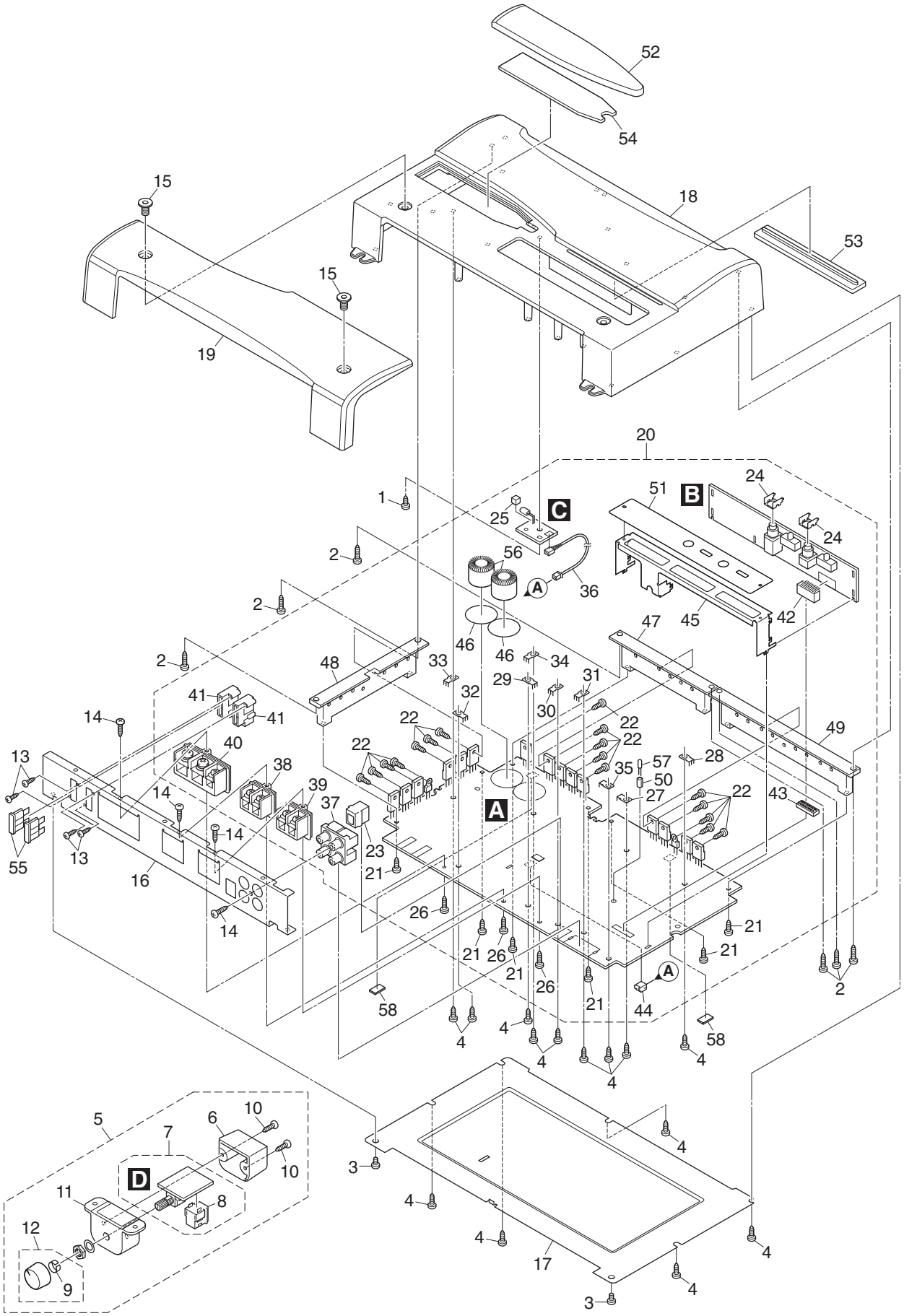

52
54
15
18
53
15
19
20
1
C
B
51
24
25
24
2
56
36
A
2
45
42
47
46
46
2
48
33
34
29
31
32
30
41
41
14
22
22
22
49
40
13
38
22
35
57
28
50
39
14
37
27
22
43
A
55
13
14
23
16
21
26
21
21
21
26
21
26
21
A
2
58
44
4
4
58
4
4
4
4
5
10
6
7
10
D
11
8
12
9
3
4
4
4
17
4
3
4

(1) EXTERIOR SECTION PARTS LIST

Mark	No.	Description	Part No.
	1	Screw	BBZ30P060FTB
	2	Screw	BBZ30P100FTB
	3	Screw	BSZ30P060FTC
	4	Screw(M3 X 8)	CBA2011
	5	Remote Control Assy	CXC4064
	6	Cover	CNS8141
	7	Remote Control Unit	CWM9848
	8	Connector(CN1351)	CKS4962
	9	Spring	CBL1692
	10	Screw	BPZ20P100FTB
	11	Grille	CNS8140
	12	Knob Unit	CXC4335
	13	Screw	PPZ20P060FTB
	14	Screw	PPZ30P100FTB
	15	Screw(M6 X 10)	YBA5001
	16	Panel	YNB5004
	17	Case	YNB5006
	18	Heat Sink	See Contrast table(2)
	19	Cover	See Contrast table(2)
	20	Amp Unit	YWH5001
	21	Screw	BBZ30P080FSN
	22	Screw(M3 X 8)	CBA2011
	23	Connector(CN501)	CKS4962
	24	Holder	CND2466
	25	Spacer	CNM9570
	26	Screw	PPZ30P100FSN
	27	Terminal(CN301)	VNF1084
	28	Terminal(CN302)	VNF1084
	29	Terminal(CN303)	VNF1084
	30	Terminal(CN304)	VNF1084
	31	Terminal(CN502)	VNF1084
	32	Terminal(CN601)	VNF1084
	33	Terminal(CN651)	VNF1084
	34	Terminal(CN652)	VNF1084
	35	Terminal(CN800)	VNF1084
	36	Cord Assy(CN631)	YDE5017
	37	Pin Jack(CN801)	YKB5001
	38	Terminal(CN305)	YKE5001
	39	Terminal(CN306)	YKE5001
	40	Terminal(CN600)	YKE5002
	41	Fuse Holder	YKR5001
	42	Connector(CN102)	YKS5008
	43	Connector(CN101)	YKS5009
	44	Connector(CN630)	YKS5010
	45	Holder	YND5002
	46	Insulator	YNM5045
	47	Sub Heat Sink	YNR5008
	48	Sub Heat Sink	YNR5009
	49	Sub Heat Sink	YNR5010
	50	Spacer	YNS5118
	51	Plate Unit	YXA5174
	52	Badge Unit	See Contrast table(2)
	53	Lighting Conductor Unit	YXA5176
	54	Lighting Conductor Unit	YXA5177
⚠	55	Fuse(FU601, FU602)(30 A)	CEK1330
	56	Choke Coil(L651, L652)	CTH1326
	57	LED(D608)	NSPB346BS
	58	Cushion	YNN5001

(2) CONTRAST TABLE

PRS-D2000T/XU/UC , PRS-D200/XU/EW5 , PRS-D2000T/XU/ES and PRS-D2000T/XU/CN5 are constructed the same except for the following:

Mark	No.	Description	PRS-D2000T/XU/UC	PRS-D200/XU/EW5	PRS-D2000T/XU/ES	PRS-D2000T/XU/CN5
	18	Heat Sink	YNR5018	YNR5005	YNR5019	YNR5019
	19	Cover	YNR5013	YNR5007	YNR5021	YNR5021
	52	Badge Unit	YXA5136	YXA5135	YXA5135	YXA5135

5. ELECTRICAL PARTS LIST

NOTE:

- *Parts whose parts numbers are omitted are subject to being not supplied.*
- *The part numbers shown below indicate chip components.*

  Chip Resistor

  RS1/◯S◯◯◯J,RS1/◯◯S◯◯◯J

  Chip Capacitor (except for CQS.....)

  CKS....., CCS....., CSZS.....
- *The ⚠ mark found on some component parts indicatesthe importance of the safety factor of the part. Therefore, when replacing, be sure to use parts of identical designation.*
- *Meaning of the figures and others in the parentheses in the parts list.*

  Example) IC 301 is on the point (face A, 91 of x-axis, and 111 of y-axis) of the corresponding PC board.

  IC 301 (A, 91, 111) IC NJM2068V

Circuit Symbol and No. **Part No.**

Unit Number : YWH5001

Unit Name : Amp Unit

Unit Number : CWM9848

Unit Name : Remote Control Unit

Amp Unit
Consists of
Amp PCB
SW PCB
LED PCB

A B C

Unit Number : YWH5001

Unit Name : Amp Unit

MISCELLANEOUS

IC 101	(B,321,105) IC	NJM4558MD
IC 102	(B,312,141) IC	NJM4558MD
IC 103	(B,312,95) IC	NJM4558MD
IC 104	(B,315,119) IC	NJM4558MD
IC 105	(B,269,86) IC	OPA2134UA
IC 106	(B,281,86) IC	OPA2134UA
IC 300	(B,267,106) IC	OPA2134UA
IC 301	(B,276,106) IC	OPA2134UA
IC 302	(B,238,92) IC	ICC1
IC 303	(B,197,137) IC	ICC3
IC 304	(B,226,137) IC	ICC3
IC 501	(B,223,43) IC	MAX309ESE
IC 601	(A,104,34) IC	PA2027A
IC 602	(B,110,74) IC	UPC494GS
IC 681	(B,124,136) IC	NJM78M05DL1A
IC 682	(B,109,136) IC	NJM79M05DL1A
IC 801	(B,263,36) IC	NJM2068MD
IC 802	(B,281,39) IC	NJM2068MD
Q 201	(B,261,70) Transistor	2SC4081
Q 202	(B,278,70) Transistor	2SC4081
Q 203	(B,267,64) Transistor	DTA124EU
Q 204	(B,151,59) Transistor	DTC144EU
Q 303	(B,221,99) Transistor	UMT1N
Q 304	(B,238,114) Transistor	UMT1N
Q 305	(A,196,167) FET	2SK3645-01MR
Q 306	(A,234,167) FET	2SK3645-01MR
Q 307	(A,182,167) FET	2SK3645-01MR
Q 308	(A,221,167) FET	2SK3645-01MR
Q 601	(B,124,26) Transistor	2SC4081
Q 602	(B,105,49) Transistor	DTC114TU
Q 603	(B,103,45) Transistor	DTA114EU
Q 604	(A,113,50) Transistor	2SB1243
Q 605	(B,114,55) Transistor	2SC4081
Q 606	(B,111,55) Transistor	DTC114TU
Q 607	(B,114,63) Transistor	2SA1576A
Q 611	(B,120,30) Transistor	2SA1576A
Q 650	(B,127,26) Transistor	DTC124EU
Q 651	(B,91,69) Transistor	2SD1766
Q 652	(B,91,79) Transistor	2SB1188
Q 653	(B,98,79) Transistor	2SB1188
Q 654	(B,98,69) Transistor	2SD1766
Q 655	(A,9,66) Transistor	FKV550N
Q 656	(A,9,52) Transistor	FKV550N
Q 657	(A,9,39) Transistor	FKV550N
Q 658	(A,9,133) Transistor	FKV550N
Q 659	(A,9,120) Transistor	FKV550N
Q 660	(A,9,106) Transistor	FKV550N
Q 661	(A,91,167) Transistor	2SD2395
Q 662	(A,78,167) Transistor	2SB1566
Q 681	(A,105,167) Transistor	2SD2395
Q 901	(B,136,41) Transistor	2SA1576A
Q 902	(B,139,41) Transistor	2SC4081
Q 903	(B,142,41) Transistor	2SC4081
D 201	(B,272,64) Diode	DAP202U
D 203	(B,156,60) Diode	MA111
D 301	(B,206,135) Diode	DAP202U
D 302	(B,234,135) Diode	DAP202U
D 303	(B,198,143) Diode	DAP202U
D 304	(B,226,144) Diode	DAP202U
D 305	(A,210,137) Diode	ERA92-02VH
D 306	(A,238,137) Diode	ERA92-02VH
D 311	(B,228,67) Diode	DAN202U

Circuit Symbol and No.		Part No.
D 312	(B,239,67) Diode	DAP202U
D 382	(B,195,85) Diode	UDZS7R5(B)
D 383	(B,195,79) Diode	UDZS7R5(B)
D 501	(B,227,36) Diode	UDZS16(B)
D 502	(B,227,51) Diode	UDZS16(B)
D 601	(A,63,28) Diode	RM4Z-LFJ4
D 602	(B,121,22) Diode	UDZS7R5(B)
D 603	(B,92,35) Diode	1SR154-400
D 604	(B,92,39) Diode	1SR154-400
D 605	(B,120,55) Diode	MA111
D 606	(B,107,61) Diode	MA111
D 607	LED	NSPB346BS-5859
D 608	(A,229,79) LED	NSPB346BS-5859
D 650	(B,245,17) Diode	DAN202U
D 651	(B,93,46) Diode	DAN202U
D 652	(B,98,46) Diode	MA111
D 653	(A,39,167) Diode	FML22S
D 654	(A,65,167) Diode	FML22R
D 655	(B,109,146) Diode	UDZS16(B)
D 656	(B,86,146) Diode	UDZS16(B)
D 681	(B,123,146) Diode	UDZS11(B)
D 901	(B,133,40) Diode	MA111
D 902	(A,145,45) Diode	ERA15-02VH
D 904	(B,130,31) Diode	MA111
L 303	(A,197,127) Choke Coil(19.5 µH)	YTH5003
L 304	(A,225,127) Choke Coil(19.5 µH)	YTH5003
L 601	(A,58,51) Choke Coil(50 µH)	CTH1323
L 651	(A,36,130) Choke Coil(320 µH)	CTH1326
L 652	(A,63,130) Choke Coil(320 µH)	CTH1326
L 801	(A,253,27) Ferri-Inductor	CTF1007
L 802	(A,267,17) Ferri-Inductor	CTF1007
T 651	(A,58,85) Transformer	YTT5001
RY301	(A,150,35) Relay	YSR5001
RY302	(A,188,34) Relay	YSR5001
TH651	(A,10,77) Thermistor	CCX1013
TH652	(A,213,165) Thermistor	CCX1013
TH653	(A,83,66) Thermistor	CCX1064
S 601	(A,96,61) Switch(BFC)	HSH-156
SW101	(A,301,102) Switch(LPF/HPF)	CSH1029
SW102	(A,301,146) Switch(INPUT)	CSH1042
VR101	(A,307,81) 20 kΩ(E)(CUT OFF FREQUENCY CONTROL)	CCS1266
VR102	(A,307,122) 10 kΩ(A)(GAIN CONTROL)	CCS1265
⚠FU601	(A,60,9) Fuse(30 A)	CEK1330
⚠FU602	(A,41,9) Fuse(30 A)	CEK1330

RESISTORS

R 101	(B,321,117)	RS1/16S103J
R 102	(B,315,150)	RS1/16S103J
R 103	(B,320,112)	RS1/16S103J
R 104	(B,311,150)	RS1/16S103J
R 105	(B,317,107)	RS1/16S103J
R 106	(B,308,146)	RS1/16S103J
R 107	(B,325,105)	RS1/16S472J
R 108	(B,316,141)	RS1/16S472J
R 109	(B,321,98)	RS1/16S103J
R 110	(B,312,135)	RS1/16S103J
R 111	(B,321,96)	RS1/16S103J
R 112	(B,312,133)	RS1/16S103J
R 113	(B,303,85)	RS1/16S822J
R 114	(B,305,85)	RS1/16S822J
R 117	(B,325,97)	RS1/16S562J
R 118	(B,316,133)	RS1/16S562J
R 119	(B,321,94)	RS1/16S822J
R 120	(B,312,131)	RS1/16S822J
R 123	(B,299,108)	RS1/16S222J
R 124	(B,305,108)	RS1/16S222J
R 125	(B,301,111)	RS1/16S131J
R 126	(B,304,110)	RS1/16S131J
R 129	(B,269,78)	RS1/16S101J
R 130	(B,282,78)	RS1/16S101J
R 131	(B,273,77)	RS1/16S182J
R 132	(B,286,77)	RS1/16S182J
R 133	(B,264,98)	RS1/16S222J
R 134	(B,275,99)	RS1/16S222J
R 135	(B,263,89)	RS1/16S331J
R 136	(B,275,89)	RS1/16S331J
R 137	(B,268,92)	RS1/16S273J
R 138	(B,280,93)	RS1/16S273J
R 141	(B,267,79)	RS1/16S222J
R 142	(B,280,79)	RS1/16S222J
R 201	(B,258,70)	RS1/16S472J
R 202	(B,275,68)	RS1/16S472J
R 203	(B,152,55)	RS1/16S102J
R 204	(B,156,54)	RS1/16S103J
R 205	(B,155,58)	RS1/16S224J
R 207	(B,269,67)	RS1/16S472J
R 301	(B,268,98)	RS1/16S222J
R 302	(B,279,98)	RS1/16S222J
R 303	(B,269,96)	RS1/16S112J
R 304	(B,279,96)	RS1/16S112J
R 305	(B,240,64)	RS1/16S222J
R 306	(B,243,71)	RS1/16S222J
R 307	(B,237,78)	RS1/16S683J
R 308	(B,238,78)	RS1/16S332J
R 309	(B,233,77)	RS1/16S332J
R 310	(B,231,77)	RS1/16S683J
R 311	(B,249,80)	RS1/16S473J
R 312	(B,249,84)	RS1/16S473J
R 313	(B,232,81)	RS1/16S102J
R 314	(B,254,103)	RS1/16S102J
R 315	(B,168,43)	RS1/16S183J
R 316	(B,211,48)	RS1/16S183J
R 317	(B,219,91)	RS1/16S822J
R 318	(B,250,108)	RS1/16S822J
R 319	(B,209,126)	RS1/16S223J
R 320	(B,213,126)	RS1/16S223J
R 321	(B,218,96)	RS1/16S102J
R 322	(B,242,111)	RS1/16S102J
R 323	(B,226,101)	RS1/16S681J
R 324	(B,233,106)	RS1/16S682J
R 326	(B,229,106)	RS1/16S105J
R 327	(B,229,101)	RS1/16S105J
R 328	(B,236,106)	RS1/16S681J
R 329	(B,190,137)	RS1/16S472J
R 330	(B,219,137)	RS1/16S472J
R 331	(B,209,133)	RS1/16S103J
R 332	(B,237,132)	RS1/16S103J
R 337	(B,201,146)	RS1/16S103J
R 338	(B,229,146)	RS1/16S103J

Circuit Symbol and No.		Part No.
R 341	(A,171,132)	RS2LMF220J
R 342	(A,251,132)	RS2LMF220J
R 343	(A,160,137)	RD1/4PU100J
R 344	(A,267,135)	RD1/4PU100J
R 345	(B,224,101)	RS1/16S103J
R 346	(B,231,109)	RS1/16S103J
R 347	(A,165,132)	RS2LMF220J
R 348	(A,257,132)	RS2LMF220J
R 349	(B,144,34)	RS1/16S333J
R 350	(B,180,38)	RS1/16S333J
R 351	(B,223,80)	RS1/16S182J
R 352	(B,249,102)	RS1/16S182J
R 353	(B,229,85)	RS1/16S473J
R 354	(B,247,100)	RS1/16S473J
R 355	(B,225,89)	RS1/16S182J
R 356	(B,248,106)	RS1/16S182J
R 357	(B,225,85)	RS1/16S182J
R 358	(B,248,104)	RS1/16S182J
R 359	(B,227,89)	RS1/16S182J
R 360	(B,245,103)	RS1/16S182J
R 361	(B,228,92)	RS1/16S182J
R 362	(B,243,105)	RS1/16S182J
R 363	(B,228,95)	RS1/16S473J
R 364	(B,241,105)	RS1/16S473J
R 365	(B,224,93)	RS1/16S102J
R 366	(B,242,109)	RS1/16S102J
R 385	(B,143,25)	RS1/16S333J
R 386	(B,185,30)	RS1/16S333J
R 388	(B,203,80)	RS1/16S102J
R 389	(B,188,83)	RS1/16S102J
R 501	(B,231,44)	RS1/16S472J
R 502	(B,222,25)	RS1/16S102J
R 503	(B,233,44)	RS1/16S102J
R 504	(B,227,49)	RS1/16S473J
R 505	(B,227,38)	RS1/16S473J
R 506	(B,230,43)	RS1/16S473J
R 507	(B,224,51)	RS1/16S104J
R 508	(B,222,51)	RS1/16S122J
R 509	(B,220,51)	RS1/16S471J
R 510	(B,219,51)	RS1/16S101J
R 511	(B,224,36)	RS1/16S104J
R 512	(B,222,36)	RS1/16S122J
R 513	(B,220,36)	RS1/16S471J
R 514	(B,219,36)	RS1/16S101J
R 601	(A,121,18)	RD1/4PU222J
R 602	(B,124,15)	RS1/16S473J
R 603	(B,124,18)	RS1/16S103J
R 604	(B,125,22)	RS1/16S103J
R 605	(B,124,31)	RS1/16S222J
R 606	(B,119,27)	RS1/16S472J
R 607	(B,112,31)	RS1/16S512J
R 608	(B,94,32)	RS1/16S512J
R 609	(B,105,30)	RS1/16S103J
R 610	(B,114,37)	RS1/16S472J
R 611	(B,117,47)	RS1/16S221J
R 612	(B,116,44)	RS1/16S102J
R 613	(B,104,38)	RS1/16S223J
R 614	(B,106,38)	RS1/16S223J
R 615	(B,109,38)	RS1/16S223J
R 616	(A,120,50)	RD1/4PU472J

Circuit Symbol and No.		Part No.
R 617	(A,137,56)	RD1/4PU101J
R 618	(A,146,56)	RD1/4PU271J
R 619	(A,141,53)	RD1/4PU271J
R 620	(B,112,58)	RS1/16S222J
R 621	(B,113,40)	RS1/16S103J
R 622	(B,114,66)	RS1/16S202J
R 623	(B,120,63)	RS1/16S101J
R 624	(B,102,59)	RS1/16S105J
R 625	(B,107,67)	RS1/16S153J
R 626	(B,115,68)	RS1/16S102J
R 627	(B,110,64)	RS1/16S473J
R 628	(A,141,66)	RD1/4PU271J
R 629	(B,114,60)	RS1/16S223J
R 645	(A,146,63)	RD1/4PU271J
R 648	(B,241,18)	RS1/16S683J
R 650	(B,121,84)	RS1/16S203J
R 651	(B,111,81)	RS1/16S472J
R 652	(B,113,82)	RS1/16S472J
R 653	(B,104,82)	RS1/16S332J
R 654	(B,106,82)	RS1/16S332J
R 655	(B,92,50)	RS1/16S272J
R 656	(B,95,50)	RS1/16S272J
R 657	(B,99,50)	RS1/16S272J
R 658	(B,124,79)	RS1/16S222J
R 659	(B,119,80)	RS1/16S183J
R 660	(A,23,66)	RS1/2PMF121J
R 661	(A,23,52)	RS1/2PMF121J
R 662	(A,23,43)	RS1/2PMF121J
R 663	(B,94,83)	RS1/16S472J
R 664	(B,103,82)	RS1/16S472J
R 665	(A,23,126)	RS1/2PMF121J
R 666	(A,23,120)	RS1/2PMF121J
R 667	(A,23,106)	RS1/2PMF121J
R 668	(A,32,59)	RS1/2PMF100J
R 669	(A,32,100)	RS1/2PMF100J
R 670	(A,66,116)	RS1/2PMF220J
R 671	(A,87,98)	RS1/2PMF220J
R 672	(A,37,116)	RS1/2PMF220J
R 675	(A,93,154)	RS1/2PMF100J
R 676	(A,72,154)	RS1/2PMF100J
R 677	(A,110,154)	RD1/4PU392J
R 678	(A,85,154)	RD1/4PU392J
R 679	(B,108,82)	RS1/16S472J
R 680	(B,122,79)	RS1/16S274J
R 681	(A,113,153)	RD1/4PU332J
R 682	(A,150,148)	RD1/4PU2R2J
R 683	(A,150,152)	RD1/4PU2R2J
R 686	(A,137,152)	RS1/2PMF220J
R 801	(A,249,48)	RD1/4PU683J
R 802	(A,259,48)	RD1/4PU683J
R 803	(B,254,39)	RS1/16S471J
R 804	(B,273,43)	RS1/16S471J
R 805	(B,264,41)	RS1/16S223J
R 806	(B,279,45)	RS1/16S223J
R 807	(B,269,37) 10 kΩ	CCN1152
R 808	(B,286,40) 10 kΩ	CCN1152
R 809	(B,268,30) 10 kΩ	CCN1152
R 810	(B,285,33) 10 kΩ	CCN1152
R 811	(B,268,33) 10 kΩ	CCN1152
R 812	(B,286,36) 10 kΩ	CCN1152

Circuit Symbol and No.			Part No.
R 813	(B,263,28)	10 kΩ	CCN1152
R 814	(B,280,31)	10 kΩ	CCN1152
R 821	(B,258,27)		RS1/16S471J
R 822	(B,281,29)		RS1/16S471J
R 901	(B,136,49)		RS1/16S472J
R 902	(B,136,36)		RS1/16S104J
R 903	(B,138,36)		RS1/16S472J
R 904	(B,140,36)		RS1/16S223J

CAPACITORS

C 101	(B,320,113)		CCSRCH470J50
C 102	(B,311,148)		CCSRCH470J50
C 103	(A,314,103)		CFTNA154J50
C 104	(A,315,128)		CFTNA154J50
C 105	(A,313,87)		CFTNA154J50
C 106	(A,316,112)		CFTNA154J50
C 107	(A,264,74)		CEANP4R7M50
C 108	(A,277,74)		CEANP4R7M50
C 109	(A,271,80)		CFTNA224J50
C 110	(A,284,80)		CFTNA224J50
C 111	(A,263,87)		CFTNA224J50
C 112	(A,275,86)		CFTNA224J50
C 113	(B,263,77)		CCSRCH221J50
C 114	(B,276,77)		CCSRCH221J50
C 151	(B,317,102)		CKSRYB103K50
C 152	(B,308,141)		CKSRYB103K50
C 153	(B,324,111)		CKSRYB103K50
C 154	(B,315,148)		CKSRYB103K50
C 155	(B,308,95)		CKSRYB103K50
C 156	(B,311,119)		CKSRYB103K50
C 157	(B,316,95)		CKSRYB103K50
C 158	(B,319,119)		CKSRYB103K50
C 159	(B,265,83)		CKSRYB103K50
C 160	(B,277,83)		CKSRYB103K50
C 161	(B,272,92)		CKSRYB103K50
C 162	(B,282,93)		CKSRYB103K50
C 165	(A,324,119)		CEAT100M50
C 166	(A,322,155)		CEAT100M50
C 202	(B,153,62)		CKSRYB104K16
C 204	(B,269,69)		CKSRYB473K50
C 301	(B,269,100)		CCSRCH391J50
C 302	(B,278,100)		CCSRCH391J50
C 303	(A,224,66)	1 µF/50 V	YCH5006
C 304	(A,232,66)	1 µF/50 V	YCH5006
C 305	(A,220,84)		CEAT4R7M50
C 306	(A,211,88)		CEAT4R7M50
C 307	(B,245,79)		CKSRYB472K50
C 308	(B,249,87)		CKSRYB472K50
C 309	(B,243,80)		CKSQYB474K25
C 310	(B,252,91)		CKSQYB474K25
C 311	(B,212,83)		CKSRYB104K50
C 312	(B,208,89)		CKSRYB104K50
C 313	(A,198,153)	47 µF/50 V	ACH1411
C 314	(A,250,153)	47 µF/50 V	ACH1411
C 315	(B,209,159)		CKSQYF105Z50
C 316	(B,252,150)		CKSQYF105Z50
C 317	(B,209,157)		CKSQYF105Z50
C 318	(B,254,150)		CKSQYF105Z50
C 319	(B,240,78)		CKSRYB222K50
C 320	(B,235,78)		CKSRYB222K50
C 321	(B,229,83)		CKSRYB272K50
C 322	(B,252,103)		CKSRYB272K50
C 323	(B,224,95)		CKSRYB222K50
C 324	(B,239,106)		CKSRYB222K50
C 325	(B,220,88)		CCSRCH151J50
C 326	(B,249,111)		CCSRCH151J50
C 327	(B,217,88)		CCSRCH221J50
C 328	(B,251,111)		CCSRCH221J50
C 329	(B,228,101)		CKSRYB105K10
C 330	(B,231,106)		CKSRYB105K10
C 331	(B,234,106)		CKSRYB105K10
C 333	(B,205,140)		CKSQYB224K50
C 334	(B,234,140)		CKSQYB224K50
C 335	(A,191,148)		CEAT4R7M50
C 336	(A,233,153)		CEAT4R7M50
C 337	(A,165,139)		CQHA221J2A
C 338	(A,262,138)		CQHA221J2A
C 339	(A,177,132)		CFTNA334J50
C 340	(A,245,133)		CFTNA334J50
C 341	(A,177,125)		CFTNA684J50
C 342	(A,245,127)		CFTNA684J50
C 345	(B,162,23)		CCSQCH102J50
C 346	(B,200,24)		CCSQCH102J50
C 347	(B,162,25)		CKSQYB103K50
C 348	(B,200,22)		CKSQYB103K50
C 351	(A,182,117)		CFTNA684J50
C 352	(A,240,119)		CFTNA684J50
C 353	(A,183,148)	47 µF/50 V	ACH1411
C 354	(A,217,148)	47 µF/50 V	ACH1411
C 355	(B,178,150)		CKSQYF105Z50
C 356	(B,215,157)		CKSQYF105Z50
C 357	(B,180,150)		CKSQYF105Z50
C 358	(B,215,159)		CKSQYF105Z50
C 363	(B,263,98)		CKSRYB103K50
C 364	(B,270,112)		CKSRYB103K50
C 365	(B,273,98)		CKSRYB103K50
C 366	(B,280,112)		CKSRYB103K50
C 367	(B,170,18)		CKSQYB102K50
C 368	(B,207,14)		CKSQYB102K50
C 369	(B,170,21)		CKSQYB103K50
C 370	(B,207,16)		CKSQYB103K50
C 380	(A,241,153)	47 µF/50 V	ACH1411
C 381	(A,207,153)	47 µF/50 V	ACH1411
C 382	(A,226,148)	47 µF/50 V	ACH1411
C 383	(A,174,148)	47 µF/50 V	ACH1411
C 384	(B,243,150)		CKSQYF105Z50
C 385	(B,194,150)		CKSQYF105Z50
C 386	(B,228,150)		CKSQYF105Z50
C 387	(B,172,150)		CKSQYF105Z50
C 388	(B,245,150)		CKSQYF105Z50
C 389	(B,196,150)		CKSQYF105Z50
C 390	(B,230,150)		CKSQYF105Z50
C 391	(B,170,150)		CKSQYF105Z50
C 392	(A,263,152)		CEAT220M2A
C 393	(A,161,152)		CEAT220M2A
C 394	(A,256,148)		CFTNA104J2A
C 395	(A,168,148)		CFTNA104J2A
C 501	(B,227,20)		CKSQYB102K50
C 502	(B,230,25)		CKSQYB102K50

Circuit Symbol and No.		Part No.
C 503	(A,236,47)	CFTNA473J50
C 504	(A,222,31)	CFTNA473J50
C 505	(B,224,29)	CKSQYB102K50
C 601	(B,115,22)	CKSQYB102K50
C 602	(B,111,22)	CKSQYB103K50
C 603	(B,117,22)	CKSQYB104K50
C 604	(B,85,24)	CKSQYB102K50
C 605	(B,85,27)	CKSQYB103K50
C 606	(B,85,22)	CKSQYB104K50
C 608	(B,118,25)	CKSRYB103K50
C 609	(B,119,23)	CKSRYB103K50
C 610	(B,124,16)	CKSRYB103K50
C 611	(B,104,31)	CKSRYB103K50
C 612	(A,108,30)	CEAT100M50
C 613	(A,114,30)	CEAT100M50
C 614	(B,102,32)	CKSRYB103K50
C 615	(A,99,36)	CEAT101M16
C 616	(A,109,45)	CEAT220M25
C 617	(B,102,40)	CKSRYB103K50
C 618	(A,133,46)	CEAT471M16
C 619	(A,127,37)	CEAT220M25
C 620	(B,107,39)	CKSRYB103K50
C 621	(A,119,61)	CEAT100M50
C 622	(A,111,61)	CEAT221M16
C 623		CKSRYB104K50
C 624	(B,107,65)	CKSRYB102K50
C 625	(B,117,73)	CKSQYB105K16
C 626	(B,227,76)	CKSRYB104K50
C 631	(B,124,107)	CKSRYB104K50
C 632	(B,143,107)	CKSRYB104K50
C 633	(B,138,107)	CKSRYB104K50
C 634	(B,120,107)	CKSRYB104K50
C 635	(B,109,123)	CKSRYB104K50
C 636	(B,114,123)	CKSRYB104K50
C 637	(B,128,123)	CKSRYB104K50
C 638	(B,133,123)	CKSRYB104K50
C 650	(B,127,23)	CKSRYB105K10
C 651	(A,102,68)	CEAT101M16
C 652	(B,104,66)	CKSRYB103K50
C 653	(A,120,75)	CFTNA224J50
C 654	(B,119,78)	CKSRYB224K16
C 655	(A,27,61)	CQHA472J2A
C 656	(A,27,105)	CQHA472J2A
C 657	(A,72,33) 3 900 µF/16 V	YCH5003(P35)
C 658	(A,72,50) 3 900 µF/16 V	YCH5003(P35)
C 660	(A,61,118)	CQHA102J2A
C 661	(A,80,110)	CQHA103J2A
C 662	(A,52,118)	CQHA103J2A
C 663	(A,151,103) 2 700 µF/50 V	YCH5004(P35)
C 664	(A,132,103) 2 700 µF/50 V	YCH5004(P35)
C 665	(A,113,103) 2 700 µF/50 V	YCH5004(P35)
C 666	(A,141,120) 2 700 µF/50 V	YCH5004(P35)
C 667	(A,122,120) 2 700 µF/50 V	YCH5004(P35)
C 668	(A,103,120) 2 700 µF/50 V	YCH5004(P35)
C 669	(A,112,149) 47 µF/25 V	CCH1544
C 670	(A,90,144) 47 µF/25 V	CCH1544
C 671	(A,97,149) 47 µF/25 V	CCH1538
C 672	(A,85,140) 47 µF/25 V	CCH1538
C 673	(B,94,146)	CKSRYB473K50
C 674	(B,82,138)	CKSRYB473K50

Circuit Symbol and No.		Part No.
C 681	(A,134,136) 10 µF/50 V	YCH5010
C 682	(B,119,138)	CKSRYB104K50
C 683	(A,92,140) 10 µF/50 V	YCH5010
C 684	(B,97,138)	CKSRYB104K50
C 685	(A,129,149)	CEAT470M25
C 686	(A,119,149)	CEAT470M16
C 687	(B,116,146)	CKSRYB473K50
C 688	(B,174,117)	CKSRYB104K16
C 689	(B,160,149)	CKSRYB104K16
C 690	(A,142,146)	CEAT220M50
C 691	(A,105,149) 22 µF/50 V	YCH5007
C 692	(A,83,144) 22 µF/50 V	YCH5007
C 695	(A,116,135) 10 µF/50 V	YCH5010
C 696	(A,100,140) 10 µF/50 V	YCH5010
C 801	(A,251,43)	CEAT100M50
C 802	(A,268,46)	CEAT100M50
C 803	(B,264,43)	CCSQCH471J50
C 804	(B,280,47)	CCSQCH471J50
C 805	(A,257,38) 10 µF/50 V	CCH1543
C 806	(A,275,41) 10 µF/50 V	CCH1543
C 807	(B,268,41)	CKSQYB223K50
C 808	(B,277,47)	CKSQYB223K50
C 809	(B,268,31)	CCSRCH470J50
C 810	(B,286,35)	CCSRCH470J50
C 811	(B,263,30)	CCSRCH470J50
C 812	(B,281,33)	CCSRCH470J50
C 813	(B,268,39)	CKSRYB103K50
C 814	(B,285,43)	CKSRYB103K50
C 815	(B,259,30)	CKSRYB103K50
C 816	(B,277,32)	CKSRYB103K50
C 821	(A,249,40)	CEAT100M50
C 822	(A,245,34)	CEAT100M50
C 831	(B,266,12)	CKSQYB102K50
C 832	(B,277,28)	CKSQYB102K50
C 833	(B,248,29)	CKSQYB102K50
C 834	(B,246,45)	CKSQYB102K50
C 835	(B,266,14)	CKSQYB103K50
C 836	(B,275,28)	CKSQYB103K50
C 837	(B,248,31)	CKSQYB103K50
C 838	(B,246,43)	CKSQYB103K50
C 901	(A,140,31)	CEANP221M16

D

Unit Number : CWM9848

Unit Name : Remote Control Unit

Q 1351	(B,21,23) Transistor	DTC114EU
Q 1352	(B,22,6) Transistor	DTC114EU
D 1351	(B,12,25) Diode	DAN202U
D 1352	(B,16,6) Diode	DAN202U
D 1366	(B,21,11) Diode	UDZS16(B)
D 1367	(B,29,16) Diode	UDZS16(B)
S 1351	(A,6,11) Switch(BASS BOOST)	CSD1128
R 1351	(B,15,16)	RS1/16S103J
R 1352	(B,18,18)	RS1/16S102J
R 1353	(B,31,21)	RS1/16S103J
R 1354	(B,31,16)	RS1/16S102J
R 1359	(B,16,8)	RS1/16S102J