# 2. EXPLODED VIEWS AND PARTS LIST

*NOTES : • Parts marked by " * " are generally unavailable because they are not in our Master Spare Parts List.*
*• The ⚠ mark found on some component parts indicates the importance of the safety factor of the part. Therefore, when replacing, be sure to use parts of identical designation.*
*• Screw adjacent to▽mark on the product are used for disassembly.*
*• For the applying amount of lubricants or glue, follow the instructions in this manual. (In the case of no amount instructions,apply as you think it appropriate.)*

## 2.1 PACKING

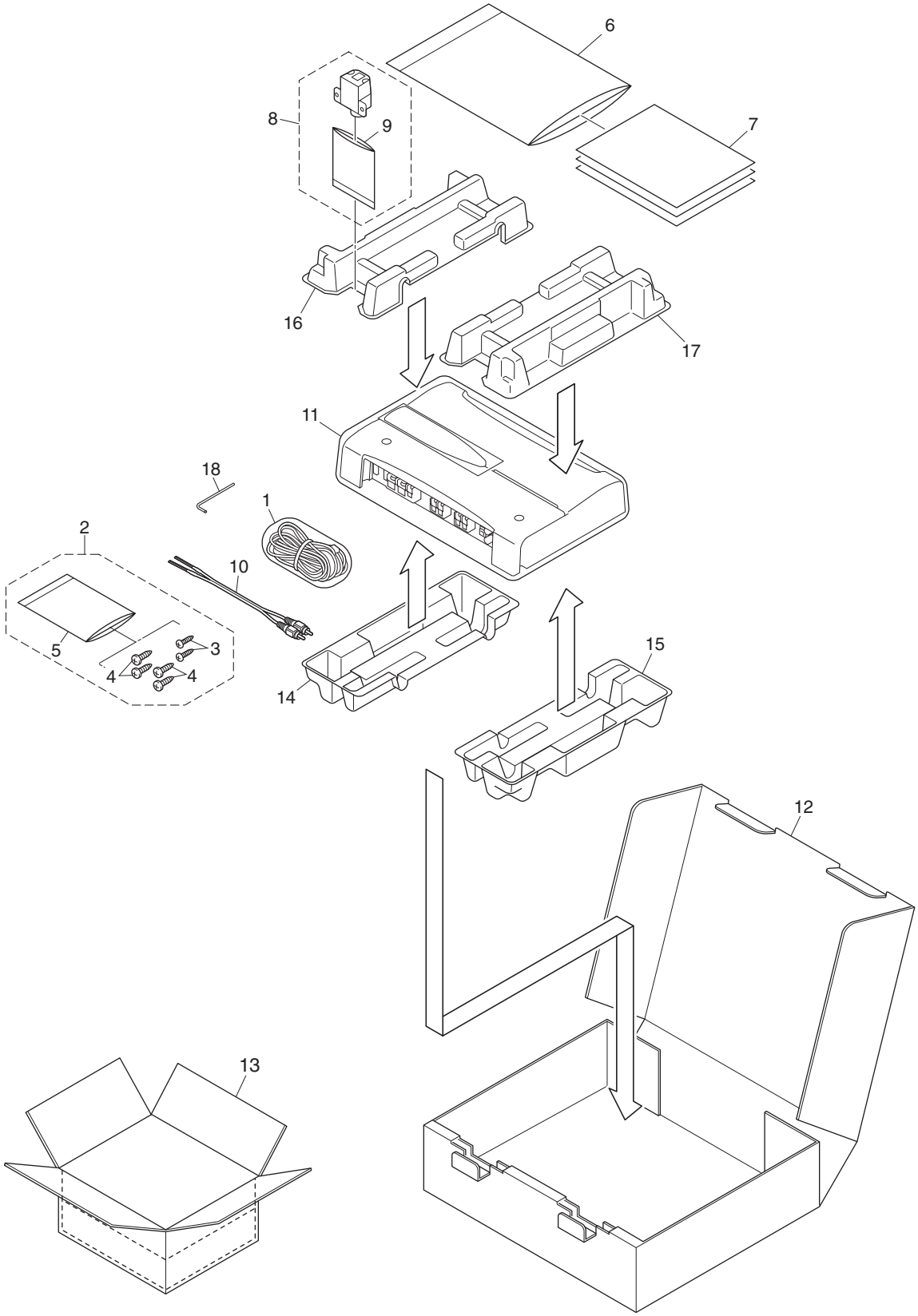

## (1) PACKING SECTION PARTS LIST

| Mark | No. | Description | Part No. |
|---|---|---|---|
| | 1 | Cord Assy | CDE7804 |
| | 2 | Screw Assy | CEA5328 |
| | 3 | Screw | BYC30P100FTB |
| | 4 | Screw | BYC40P180FTB |
| * | 5 | Polyethylene Sheet | CNM4338 |
| | 6 | Polyethylene Bag | CEG1116 |
| | 7-1 | Owner's Manual | See Contrast table(2) |
| | 7-2 | Owner's Manual | See Contrast table(2) |
| | 7-3 | Caution Card | YRP5001 |
| * | 7-4 | Warranty Card | See Contrast table(2) |
| * | 7-5 | Warranty Card | See Contrast table(2) |
| | 8 | Remote Control Assy | CXC4064 |
| * | 9 | Polyethylene Bag | CEG1171 |
| | 10 | Cord Assy | YDE5010 |
| | 11 | Polyethylene Bag | See Contrast table(2) |
| | 12 | Carton | See Contrast table(2) |
| | 13 | Contain Box | See Contrast table(2) |
| | 14 | Protector | YHP5006 |
| | 15 | Protector | YHP5007 |
| | 16 | Protector | YHP5012 |
| | 17 | Protector | YHP5013 |
| | 18 | Shaft | YLP5001 |

## (2) CONTRAST TABLE

PRS-D1000M/XU/UC , PRS-D1000M/XU/EW5 and PRS-D1000M/XU/ES are constructed the same except for the following:

| Mark | No. | Description | PRS-D1000M/XU/UC | PRS-D1000M/XU/EW5 | PRS-D1000M/XU/ES |
|---|---|---|---|---|---|
| | 7-1 | Owner's Manual | CRD4120 | CRD4119 | CRD4121 |
| | 7-2 | Owner's Manual | Not used | Not used | CRD4122 |
| * | 7-4 | Warranty Card | CRY1157 | CRY1157 | Not used |
| * | 7-5 | Warranty Card | CRY1070 | Not used | Not used |
| | 11 | Polyethylene Bag | YEG5004 | YEG5003 | YEG5003 |
| | 12 | Carton | CHG5908 | CHG5907 | CHG5909 |
| | 13 | Contain Box | CHL5908 | CHL5907 | CHL5909 |

**Owner's Manual**

| Part No. | Language |
|---|---|
| CRD4120 | English, French, Spanish |
| CRD4119 | English, Spanish, German, French, Italian, Dutch, Russian |
| CRD4121 | English, Spanish |
| CRD4122 | Arabic, Portuguese(B) |

## 2.2 EXTERIOR

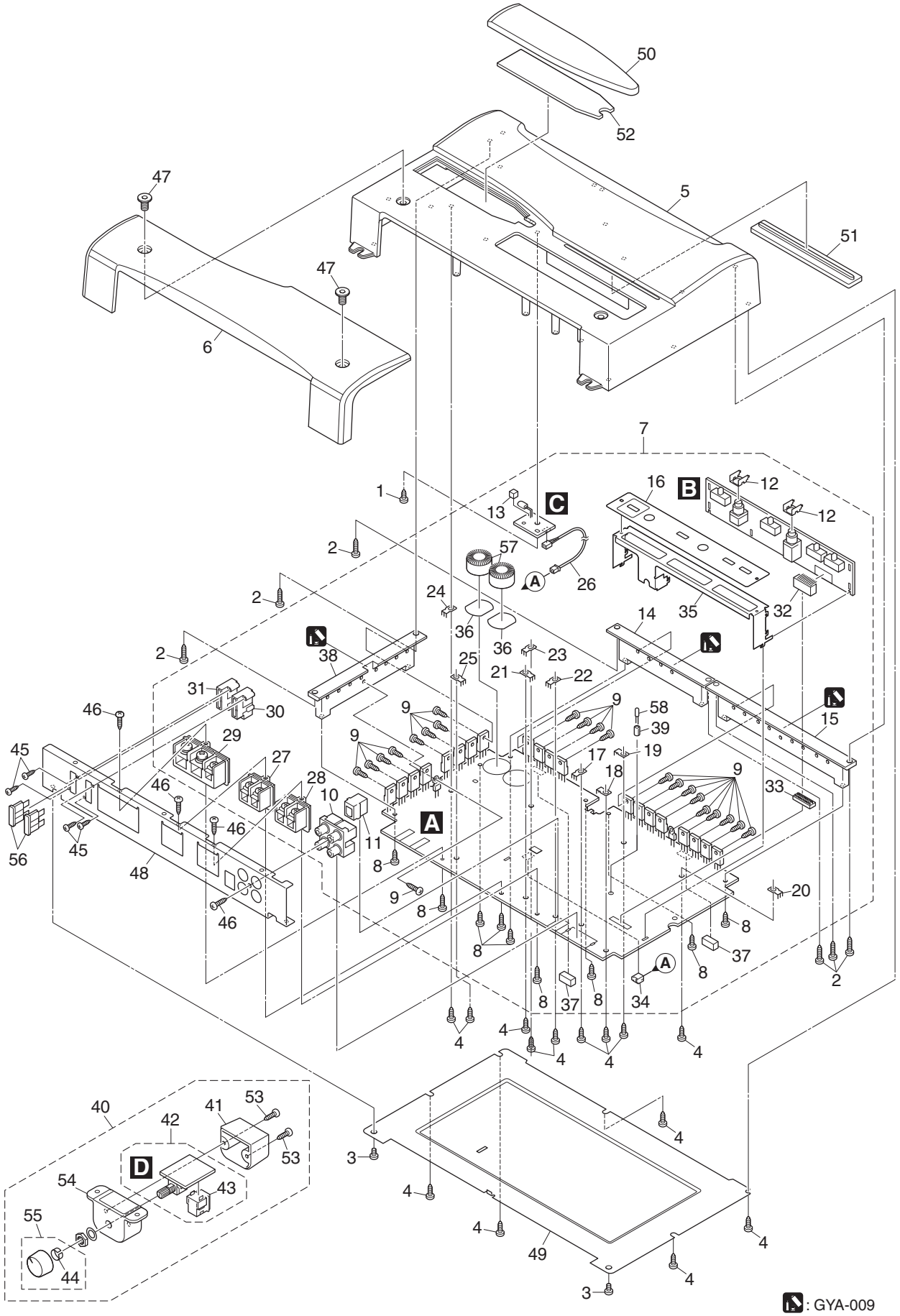

50
52
47
5
51
47
6
7
1
16
B
12
12
13
C
2
57
26
A
2
24
35
32
36
36
14
2
38
23
25
21
22
31
30
9
9
58
39
15
46
29
9
17
19
45
27
18
9
33
46
28
10
A
46
11
56
45
48
8
9
20
8
8
8
37
8
A
2
8
37
8
34
4
4
4
4
4
4
40
41
53
42
53
D
3
4
54
43
4
55
4
4
49
44
4
3
: GYA-009

## (1) EXTERIOR SECTION PARTS LIST

| Mark | No. | Description | Part No. |
|---|---|---|---|
| | 1 | Screw | BBZ30P060FTB |
| | 2 | Screw | BBZ30P100FTB |
| | 3 | Screw | BSZ30P060FTC |
| | 4 | Screw(M3 x 8) | CBA2011 |
| | 5 | Heat Sink | CNR1880 |
| | 6 | Cover | See Contrast table(2) |
| | 7 | Amp Unit | CWH1327 |
| | 8 | Screw | BBZ30P080FSN |
| | 9 | Screw(M3 x 8) | CBA2011 |
| | 10 | Pin Jack(CN201) | CKB1079 |
| | 11 | Connector(CN241) | CKS4962 |
| | 12 | Holder | CND2466 |
| | 13 | Spacer | CNM9570 |
| | 14 | Sub Heat Sink | CNR1882 |
| | 15 | Sub Heat Sink | YNR5010 |
| | 16 | Plate Unit | CXC6603 |
| | 17 | Terminal(CN105) | VNF1084 |
| | 18 | Terminal(CN202) | VNF1084 |
| | 19 | Terminal(CN301) | VNF1084 |
| | 20 | Terminal(CN302) | VNF1084 |
| | 21 | Terminal(CN303) | VNF1084 |
| | 22 | Terminal(CN304) | VNF1084 |
| | 23 | Terminal(CN601) | VNF1084 |
| | 24 | Terminal(CN901) | VNF1084 |
| | 25 | Terminal(CN905) | VNF1084 |
| | 26 | Cord Assy(CN801) | YDE5017 |
| | 27 | Terminal(CN305) | YKE5001 |
| | 28 | Terminal(CN306) | YKE5001 |
| | 29 | Terminal(CN906) | YKE5002 |
| | 30 | Fuse Holder(CN903) | YKR5001 |
| | 31 | Fuse Holder(CN904) | YKR5001 |
| | 32 | Connector(CN101) | YKS5008 |
| | 33 | Connector(CN103) | YKS5009 |
| | 34 | Connector(CN902) | YKS5010 |
| | 35 | Holder | YND5002 |
| | 36 | Insulator | YNM5045 |
| | 37 | Cushion | YNN5001 |
| | 38 | Sub Heat Sink | CNR1883 |
| | 39 | Spacer | YNS5118 |
| | 40 | Remote Control Assy | CXC4064 |
| | 41 | Cover | CNS8141 |
| | 42 | Remote Control Unit | CWM9848 |
| | 43 | Connector(CN1351) | CKS4962 |
| | 44 | Spring | CBL1692 |
| | 45 | Screw | PPZ20P060FTB |
| | 46 | Screw | PPZ30P100FTB |
| | 47 | Screw(M6 X 10) | YBA5001 |
| | 48 | Panel | YNB5004 |
| | 49 | Case | YNB5006 |
| | 50 | Badge Unit | See Contrast table(2) |
| | 51 | Lighting Conductor Unit | YXA5176 |
| | 52 | Lighting Conductor Unit | YXA5177 |
| | 53 | Screw | BPZ20P100FTB |
| | 54 | Grille | CNS8140 |
| | 55 | Knob Unit | CXC4335 |
| ⚠ | 56 | Fuse(40 A)(FU901, FU902) | CEK1332 |
| | 57 | Choke Coil(L601, L602) | CTH1351 |
| | 58 | LED(D906) | NSPB346BS-5859 |

## (2) CONTRAST TABLE

PRS-D1000M/XU/UC , PRS-D1000M/XU/EW5 and PRS-D1000M/XU/ES are constructed the same except for the following:

| Mark | No. | Description | PRS-D1000M/XU/UC | PRS-D1000M/XU/EW5 | PRS-D1000M/XU/ES |
|---|---|---|---|---|---|
| | 6 | Cover | CNR1885 | CNR1881 | CNR1881 |
| | 50 | Badge Unit | YXA5136 | YXA5135 | YXA5135 |

# 5. ELECTRICAL PARTS LIST

*NOTE:*

- *Parts whose parts numbers are omitted are subject to being not supplied.*
- *The part numbers shown below indicate chip components.*

  *Chip Resistor*

  *RS1/◯S◯◯◯J,RS1/◯◯S◯◯◯J*

  *Chip Capacitor (except for CQS.....)*

  *CKS....., CCS....., CSZS.....*
- *The ⚠ mark found on some component parts indicates the importance of the safety factor of the part. Therefore, when replacing, be sure to use parts of identical designation.*
- *Meaning of the figures and others in the parentheses in the parts list.*

  *Example) IC 301 is on the point (face A, 91 of x-axis, and 111 of y-axis) of the corresponding PC board.*

  *IC 301 (A, 91, 111) IC NJM2068V*

**Circuit Symbol and No.** **Part No.**

**Unit Number : CWH1327**

**Unit Name : Amp Unit**

**Unit Number : CWM9848**

**Unit Name : Remote Control Unit**

**Amp Unit**
**Consists of**
**Amp PCB**
**Control PCB**
**LED PCB**

**A B C**

**Unit Number : CWH1327**

**Unit Name : Amp Unit**

**MISCELLANEOUS**

| | | | |
|---|---|---|---|
| IC 111 | | IC | NJM2068MD |
| IC 112 | | IC | NJM2068MD |
| IC 131 | | IC | NJM2068MD |
| IC 141 | | IC | NJM2068MD |
| IC 151 | | IC | NJM2068MD |
| IC 161 | | IC | NJM2068MD |
| IC 162 | | IC | NJM2068MD |
| IC 201 | (A,259,60) | IC | NJM2068MD |
| IC 221 | (A,268,60) | IC | NJM2068MD |
| IC 241 | (A,229,61) | IC | MAX309ESE |
| IC 301 | (A,256,109) | IC | TDA7570 |
| IC 431 | (A,150,92) | IC | NJM2903M |
| IC 451 | (A,161,92) | IC | NJM2068MD |
| IC 901 | (B,115,94) | IC | UPC494GS |
| IC 902 | (A,116,59) | IC | PA2027A |
| Q 301 | (A,208,121) | Transistor | 2SC4730 |
| Q 302 | (A,285,121) | Transistor | 2SA1826 |
| Q 303 | (A,196,128) | Transistor | DTC124EK |
| Q 304 | (A,272,131) | Transistor | DTA124EK |
| Q 305 | (A,208,127) | Transistor | 2SC4730 |
| Q 306 | (A,208,133) | Transistor | 2SA1826 |
| Q 307 | (A,285,133) | Transistor | 2SC4730 |
| Q 308 | (A,285,127) | Transistor | 2SA1826 |
| Q 309 | (A,208,139) | Transistor | 2SA1826 |
| Q 310 | (A,285,139) | Transistor | 2SC4730 |
| Q 311 | (A,270,149) | Transistor | 2SC1845 |
| Q 312 | (A,270,140) | Transistor | 2SC1845 |
| Q 313 | (A,183,143) | Transistor | 2SA992 |
| Q 314 | (A,183,152) | Transistor | 2SA992 |
| Q 315 | (A,161,187) | FET | IRFI9640G |
| Q 316 | (A,174,187) | FET | IRFI9640G |
| Q 317 | (A,190,187) | FET | IRFI9640G |
| Q 318 | (A,203,187) | FET | IRFI9640G |
| Q 319 | (A,229,187) | FET | IRFI9640G |
| Q 320 | (A,242,187) | FET | IRFI640G |
| Q 321 | (A,258,187) | FET | IRFI640G |
| Q 322 | (A,271,187) | FET | IRFI640G |
| Q 401 | (A,196,87) | Transistor | DTA124EK |
| Q 402 | (A,181,105) | Transistor | 2SA1576 |
| Q 403 | (A,192,87) | Transistor | DTC124EK |
| Q 404 | (A,181,101) | Transistor | 2SC4081 |
| Q 405 | (A,181,97) | Transistor | 2SC4081 |
| Q 406 | (A,177,97) | Transistor | 2SC4081 |
| Q 407 | (A,170,97) | Transistor | 2SA1576 |
| Q 408 | (A,275,92) | Transistor | DTC144EU |
| Q 441 | (A,281,89) | Transistor | DTC114EK |
| Q 442 | (A,281,94) | Transistor | 2SA1037K |
| Q 443 | (A,281,98) | Transistor | DTC143EK |
| Q 601 | (A,81,188) | Transistor | 2SD2395 |
| Q 602 | (A,94,187) | Transistor | 2SB1566 |
| Q 901 | (A,14,82) | Transistor | FKV550N |
| Q 902 | (A,14,69) | Transistor | FKV550N |
| Q 903 | (A,14,56) | Transistor | FKV550N |
| Q 904 | (A,14,150) | Transistor | FKV550N |
| Q 905 | (A,14,137) | Transistor | FKV550N |
| Q 906 | (A,14,124) | Transistor | FKV550N |
| Q 907 | (B,98,92) | Transistor | 2SD1766 |
| Q 908 | (B,98,102) | Transistor | 2SB1188 |
| Q 909 | (B,105,102) | Transistor | 2SB1188 |
| Q 910 | (B,105,92) | Transistor | 2SD1766 |
| Q 912 | (B,131,96) | Transistor | DTC124EK |
| Q 914 | (B,113,73) | Transistor | 2SA1576 |

| Circuit Symbol and No. | | Part No. |
|---|---|---|
| Q 915 | (B,120,69) Chip Transistor | DTC114TUA |
| Q 916 | (B,126,69) Transistor | 2SC4081 |
| Q 917 | (A,109,67) Transistor | DTA114EU |
| Q 918 | (A,94,67) Transistor | 2SB1243 |
| Q 919 | (A,112,67) Chip Transistor | DTC114TUA |
| Q 920 | (B,126,49) Transistor | 2SC4081 |
| Q 921 | (B,139,49) Digital Transistor | DTC124EUA |
| Q 922 | (B,131,49) Transistor | 2SA1576 |
| Q 923 | (B,135,49) Transistor | 2SC4081 |
| Q 924 | (A,14,94) Transistor | FKV550N |
| Q 925 | (A,14,163) Transistor | FKV550N |
| D 100 | (A,226,51) Diode | UDZS16(B) |
| D 201 | (A,277,54) Diode | ERA15-02VH |
| D 202 | (A,281,54) Diode | ERA15-02VH |
| D 203 | (A,252,50) Diode | ERA15-02VH |
| D 204 | (A,256,50) Diode | ERA15-02VH |
| D 242 | (A,233,51) Diode | UDZS16(B) |
| D 301 | (A,234,113) Diode | MA111 |
| D 302 | (A,234,109) Diode | MA111 |
| D 303 | (A,198,124) Diode | MTZJ8R2(B) |
| D 304 | (A,274,127) Diode | MTZJ8R2(B) |
| D 305 | (A,270,144) Diode | MTZJ33(B) |
| D 306 | (A,183,148) Diode | MTZJ33(B) |
| D 307 | (A,181,171) Diode | FML22S |
| D 308 | (A,202,171) Diode | FML22S |
| D 309 | (A,231,173) Diode | FML22S |
| D 401 | (A,194,95) Diode | MTZJ24(B) |
| D 402 | (A,197,103) Diode | MTZJ30(B) |
| D 403 | (A,174,90) Diode | MA111 |
| D 404 | (A,167,104) Diode | MTZJ24(B) |
| D 431 | (A,151,87) Diode | MA111 |
| D 432 | (A,148,87) Diode | MA111 |
| D 441 | (A,284,98) Diode | MA111 |
| D 442 | (A,281,105) Diode | MTZJ3R9(B) |
| D 443 | (B,287,84) Diode | MA111 |
| D 451 | (B,161,88) Diode | 1SS355 |
| D 452 | (A,162,87) Diode | 1SS355 |
| D 453 | (A,160,87) Diode | 1SS355 |
| D 454 | (B,159,88) Diode | 1SS355 |
| D 601 | (B,85,168) Diode | UDZS16(B) |
| D 602 | (B,92,168) Diode | UDZS16(B) |
| D 603 | (A,54,188) Diode | FML22S |
| D 604 | (A,67,188) Diode | FML22R |
| D 801 | LED | NSPB346BS-5859 |
| D 903 | (A,111,75) Diode | DAN202U |
| D 904 | (A,108,75) Diode | DAN202U |
| D 905 | (B,120,75) Diode | MA111 |
| D 906 | (A,233,100) LED | NSPB346BS-5859 |
| D 907 | (A,130,52) Diode | MA111 |
| D 908 | (B,99,58) Diode | UDZS18(B) |
| D 909 | (A,94,58) Diode | ERA15-02VH |
| D 910 | (B,287,64) Diode | DAN202U |
| D 911 | (A,98,58) Diode | ERA15-02VH |
| D 912 | (A,68,59) Diode | RM4Z-LFJ4 |
| D 913 | (B,135,41) Diode | UDZS7R5(B) |
| ZNR201 | (B,259,34) Surge Protector | CSA30-201N |
| ZNR202 | (B,265,34) Surge Protector | CSA30-201N |
| ZNR203 | (B,256,34) Surge Protector | CSA30-201N |
| ZNR204 | (B,245,34) Surge Protector | CSA30-201N |
| L 201 | (A,285,56) Ferri-Inductor | CTF1007 |
| L 202 | (A,289,56) Ferri-Inductor | CTF1007 |
| L 211 | (A,252,61) Ferri-Inductor | CTF1007 |
| L 301 | (A,236,140) Choke Coil 18.25 µH | CTH1350 |
| L 601 | (A,41,159) Choke Coil 220 µH | CTH1351 |
| L 602 | (A,69,159) Choke Coil 220 µH | CTH1351 |
| L 901 | (A,53,62) Choke Coil 50 µH | CTH1323 |
| T 901 | (A,64,105) Transformer | CTT1127 |
| TH901 | (A,217,186) Thermistor | CCX1013 |
| TH902 | (A,25,102) Thermistor | CCX1013 |
| TH903 | (A,87,85) Thermistor | CCX1064 |
| TH904 | (A,217,135) Thermistor | CCX1064 |
| S 101 | Switch(POWER MODE) | CSH1021 |
| S 111 | Slide Switch(INPUT) | CSH1042 |
| S 141 | Switch(SUBSONIC) | CSH1021 |
| S 161 | Switch(MODE SELECT) | CSH1029 |
| S 901 | (A,100,79) Switch(BFC) | HSH-156 |
| VR131 | Variable Resistor 20 kΩ(E) | CCS1266 |
| VR161 | Variable Resistor 10 kΩ(A) | CCS1265 |
| VR301 | (A,229,112) Semi-fixed 10 kΩ(B) | CCP1448 |
| ⚠FU221 | (A,250,69) Fuse 3 A | CEK1286 |
| ⚠FU901 | Fuse 40 A | CEK1332 |
| ⚠FU902 | Fuse 40 A | CEK1332 |

## RESISTORS

| | |
|---|---|
| R 101 | RS1/16S104J |
| R 111 | RD1/4PU683J |
| R 112 | RD1/4PU683J |
| R 113 | RS1/16S471J |
| R 114 | RS1/16S471J |
| R 115 | RS1/16S223J |
| R 116 | RS1/16S223J |
| R 117 | RS1/16S1002D |
| R 118 | RS1/16S1002D |
| R 119 | RS1/16S1002D |
| R 120 | RS1/16S1002D |
| R 121 | RS1/16S1002D |
| R 122 | RS1/16S1002D |
| R 123 | RS1/16S1002D |
| R 124 | RS1/16S1002D |
| R 125 | RS1/16S222J |
| R 126 | RS1/16S222J |
| R 131 | RS1/16S222J |
| R 132 | RS1/16S222J |
| R 133 | RS1/16S222J |
| R 141 | RS1/16S153J |
| R 142 | RS1/16S223J |
| R 143 | RS1/16S682J |
| R 144 | RS1/16S473J |
| R 151 | RS1/16S331J |
| R 152 | RS1/16S273J |
| R 153 | RS1/16S222J |
| R 154 | RS1/16S473J |
| R 155 | RS1/16S182J |
| R 156 | RS1/16S101J |
| R 161 | RS1/16S222J |
| R 162 | RS1/16S391J |
| R 163 | RS1/16S682J |
| R 164 | RS1/16S202J |
| R 165 | RS1/16S472J |

| Circuit Symbol and No. | | Part No. | Circuit Symbol and No. | | Part No. |
|---|---|---|---|---|---|
| R 166 | | RS1/16S472J | R 338 | (A,188,178) | RS1/2PMF100J |
| R 167 | | RS1/16S222J | R 339 | (A,193,178) | RS1/2PMF100J |
| R 168 | | RS1/16S101J | R 340 | (A,210,178) | RS1/2PMF100J |
| R 169 | | RS1/16S822J | R 341 | (A,223,178) | RS1/2PMF100J |
| R 170 | | RS1/16S153J | R 342 | (A,248,178) | RS1/2PMF100J |
| R 171 | | RS1/16S152J | R 343 | (A,261,178) | RS1/2PMF100J |
| R 211 | (B,258,42) | RS1/16S471J | R 344 | (A,265,178) | RS1/2PMF100J |
| R 212 | (B,259,55) | RS1/16S223J | R 345 | (A,268,171) | RD1/4PU272J |
| R 213 | (A,263,60) | RS1/16S1002D | R 346 | (B,287,153) | RS1/16S121J |
| R 214 | (A,262,66) | RS1/16S1002D | R 347 | (A,209,160) 0.1 Ω | CCN1158 |
| R 215 | (A,259,66) | RS1/16S1002D | R 348 | (A,283,159) 0.1 Ω | CCN1158 |
| R 216 | (A,255,63) | RS1/16S1002D | R 349 | (A,253,169) | RS2PMF220J |
| R 221 | (B,260,42) | RS1/16S471J | R 350 | (A,143,40) | RD1/4PU473J |
| R 222 | (A,272,62) | RS1/16S472J | R 351 | (A,156,55) | RS2PMF100J |
| R 241 | (B,230,48) | RS1/16S472J | R 352 | (A,175,55) | RS2PMF100J |
| R 242 | (A,228,51) | RS1/16S102J | R 353 | (A,156,60) | RS2PMF100J |
| R 243 | (A,231,51) | RS1/16S102J | R 354 | (A,175,60) | RS2PMF100J |
| R 244 | (A,224,53) | RS1/16S473J | R 355 | (B,258,84) | RS1/16S222J |
| R 245 | (B,230,54) | RS1/16S473J | R 357 | (A,210,145) | RS2PMF151J |
| R 246 | (A,224,68) | RS1/16S473J | R 358 | (A,294,155) | RS2PMF121J |
| R 247 | (A,229,67) | RS1/16S104J | R 401 | (A,152,86) | RS1/16S473J |
| R 248 | (A,230,67) | RS1/16S122J | R 402 | (A,197,95) | RD1/4PU473J |
| R 249 | (A,232,67) | RS1/16S471J | R 403 | (A,194,103) | RD1/4PU393J |
| R 250 | (A,233,67) | RS1/16S101J | R 404 | (A,187,104) | RD1/4PU122J |
| R 301 | (A,232,107) | RS1/16S472J | R 405 | (A,184,104) | RD1/4PU223J |
| R 302 | (A,229,116) | RS1/16S472J | R 406 | (A,174,103) | RS1/2PMF822J |
| R 303 | (A,232,113) | RS1/16S153J | R 407 | (A,177,104) | RD1/4PU103J |
| R 304 | (A,232,110) | RS1/16S203J | R 408 | (A,177,90) | RD1/4PU472J |
| R 305 | (A,245,97) | RS1/16S101J | R 409 | (A,170,104) | RD1/4PU103J |
| R 306 | (A,245,100) | RS1/16S103J | R 410 | (A,181,90) | RD1/4PU822J |
| R 307 | (A,267,126) | RS1/2PMF123J | R 411 | (A,273,91) | RS1/16S101J |
| R 309 | (A,283,115) | RD1/4PU102J | R 431 | (B,166,110) | RS1/16S113J |
| R 310 | (A,283,111) | RD1/4PU561J | R 432 | (B,161,110) | RS1/16S184J |
| R 311 | (A,246,122) | RS1/16S101J | R 433 | (B,156,110) | RS1/16S163J |
| R 312 | (B,271,116) | RS1/16S101J | R 434 | (B,151,87) | RS1/16S473J |
| R 313 | (A,196,135) | RD1/4PU183J | R 435 | (B,153,87) | RS1/16S222J |
| R 314 | (A,270,135) | RD1/4PU183J | R 436 | (B,153,94) | RS1/16S222J |
| R 315 | (B,197,118) | RS1/16S103J | R 437 | (B,149,87) | RS1/16S473J |
| R 316 | (B,271,120) | RS1/16S103J | R 438 | (B,147,87) | RS1/16S163J |
| R 317 | (A,200,134) | RS1/2PMF241J | R 439 | (B,146,110) | RS1/16S152J |
| R 318 | (A,217,125) | RS1/2PMF221J | R 440 | (B,151,110) | RS1/16S204J |
| R 319 | (A,293,125) | RS1/2PMF221J | R 441 | (A,287,96) | RD1/4PU102J |
| R 320 | (A,277,135) | RS1/2PMF241J | R 442 | (A,291,105) | RD1/4PU223J |
| R 321 | (B,276,142) | RS1/16S393J | R 443 | (A,291,96) | RD1/4PU202J |
| R 322 | (B,187,146) | RS1/16S393J | R 444 | (A,288,91) | RD1/4PU222J |
| R 323 | (A,201,150) | RS2PMF151J | R 445 | (A,288,87) | RD1/4PU333J |
| R 324 | (A,219,159) | RD1/4PU0R0J | R 451 | (B,166,96) | RS1/16S563J |
| R 325 | (A,223,159) | RD1/4PU100J | R 452 | (B,164,95) | RS1/16S103J |
| R 326 | (A,293,169) | RD1/4PU100J | R 453 | (B,163,88) | RS1/16S563J |
| R 327 | (A,289,169) | RD1/4PU0R0J | R 454 | (B,159,83) | RS1/16S333J |
| R 328 | (A,289,155) | RS2PMF121J | R 455 | (B,161,95) | RS1/16S153J |
| R 329 | (A,282,145) | RS1/2PMF223J | R 456 | (B,159,95) | RS1/16S563J |
| R 330 | (A,215,159) | RS1/2PMF4R7J | R 457 | (B,157,88) | RS1/16S563J |
| R 331 | (A,293,138) | RS1/2PMF4R7J | R 458 | (B,157,95) | RS1/16S103J |
| R 332 | (A,194,145) | RS1/2PMF223J | R 459 | (A,158,86) | RS1/16S103J |
| R 333 | (A,219,168) | RD1/4PU104J | R 601 | (A,83,174) | RD1/4PU103J |
| R 334 | (A,279,171) | RD1/4PU104J | R 602 | (A,94,174) | RD1/4PU103J |
| R 335 | (B,210,160) | RS1/16S121J | R 603 | (A,170,159) | RS2PMF470J |
| R 336 | (A,215,171) | RD1/4PU272J | R 604 | (A,165,166) | RS2PMF470J |
| R 337 | (A,171,178) | RS1/2PMF100J | R 605 | (A,82,138) | RD1/2PM220J |

| Circuit Symbol and No. | | Part No. |
|---|---|---|
| R 606 | (A,49,138) | RD1/2PM220J |
| R 607 | (A,63,137) | RD1/2PM220J |
| R 608 | (A,184,113) | RD1/2PM102J |
| R 901 | (A,33,70) | RD1/2PM220J |
| R 902 | (A,37,126) | RD1/2PM220J |
| R 903 | (A,23,84) | RD1/2PM121J |
| R 904 | (A,23,71) | RD1/2PM121J |
| R 905 | (A,23,65) | RD1/2PM121J |
| R 906 | (A,19,150) | RD1/2PM121J |
| R 907 | (A,23,140) | RD1/2PM121J |
| R 908 | (A,23,127) | RD1/2PM121J |
| R 909 | (B,97,106) | RS1/16S472J |
| R 910 | (B,106,106) | RS1/16S472J |
| R 911 | (B,110,105) | RS1/8S472J |
| R 912 | (B,112,105) | RS1/8S472J |
| R 914 | (B,121,108) | RS1/16S563J |
| R 915 | (B,128,100) | RS1/16S183J |
| R 916 | (B,121,103) | RS1/16S104J |
| R 917 | (B,117,103) | RS1/16S103J |
| R 918 | (B,127,89) | RS1/16S472J |
| R 919 | (B,131,89) | RS1/16S472J |
| R 920 | (B,129,89) | RS1/16S472J |
| R 921 | (B,108,76) | RS1/16S272J |
| R 922 | (B,106,75) | RS1/16S272J |
| R 923 | (B,103,74) | RS1/16S272J |
| R 924 | (B,110,76) | RS1/16S272J |
| R 925 | (B,109,83) | RS1/16S105J |
| R 926 | (B,120,86) | RS1/16S242J |
| R 927 | (B,126,84) | RS1/16S0R0J |
| R 928 | (B,126,79) | RS1/16S273J |
| R 929 | (B,113,83) | RS1/16S153J |
| R 930 | (B,120,84) | RS1/16S182J |
| R 931 | (B,114,78) | RS1/16S101J |
| R 932 | (B,114,76) | RS1/16S362J |
| R 933 | (B,113,70) | RS1/16S223J |
| R 934 | (B,114,67) | RS1/16S103J |
| R 935 | (B,122,75) | RS1/16S392J |
| R 936 | (B,110,67) | RS1/16S223J |
| R 937 | (B,105,67) | RS1/16S223J |
| R 938 | (A,145,74) | RD1/4PU271J |
| R 939 | (A,148,74) | RD1/4PU271J |
| R 940 | (A,128,58) | RD1/4PU101J |
| R 941 | (A,138,74) | RD1/4PU271J |
| R 942 | (A,142,74) | RD1/4PU271J |
| R 943 | (A,132,58) | RD1/4PU472J |
| R 944 | (A,98,67) | RD1/4PU221J |
| R 945 | (A,101,67) | RD1/4PU152J |
| R 946 | (A,105,67) | RS1/16S223J |
| R 947 | (A,146,87) | RS1/16S151J |
| R 948 | (B,121,49) | RS1/16S472J |
| R 949 | (B,123,49) | RS1/16S0R0J |
| R 950 | (B,125,46) | RS1/16S104J |
| R 951 | (B,115,49) | RS1/16S682J |
| R 952 | (B,103,52) | RS1/16S682J |
| R 953 | (B,113,58) | RS1/16S103J |
| R 954 | (B,142,49) | RS1/16S683J |
| R 956 | (B,131,46) | RS1/16S222J |
| R 957 | (B,128,47) | RS1/16S472J |
| R 958 | (B,136,44) | RS1/16S103J |
| R 959 | (B,134,44) | RS1/16S103J |

| Circuit Symbol and No. | | Part No. |
|---|---|---|
| R 960 | (B,129,43) | RS1/16S473J |
| R 961 | (A,128,39) | RD1/4PU222J |
| R 962 | (A,23,97) | RD1/2PM121J |
| R 963 | (A,24,150) | RD1/2PM121J |

## CAPACITORS

| | | |
|---|---|---|
| C 101 | | CEAT100M50 |
| C 102 | | CEAT100M50 |
| C 111 | | CEAT100M50 |
| C 112 | | CEAT100M50 |
| C 113 | | CCSRCH471J50 |
| C 114 | | CCSRCH471J50 |
| C 115 | | CEAT100M50 |
| C 116 | | CEAT100M50 |
| C 117 | | CKSRYB103K50 |
| C 118 | | CKSRYB103K50 |
| C 119 | | CCSRCH271J50 |
| C 120 | | CCSRCH271J50 |
| C 121 | | CCSRCH271J50 |
| C 122 | | CCSRCH271J50 |
| C 123 | | CKSRYB472K50 |
| C 124 | | CKSRYB472K50 |
| C 125 | | CKSRYB103K50 |
| C 126 | | CKSRYB103K50 |
| C 131 | | CFTNA154J50 |
| C 132 | | CFTNA154J50 |
| C 133 | | CKSRYB103K50 |
| C 134 | | CKSRYB103K50 |
| C 135 | | CFTNA154J50 |
| C 136 | | CFTNA474J50 |
| C 141 | | CFTNA474J50 |
| C 142 | | CFTNA474J50 |
| C 143 | | CFTNA474J50 |
| C 144 | | CFTNA474J50 |
| C 145 | | CKSRYB103K50 |
| C 146 | | CKSRYB103K50 |
| C 151 | | CEAT4R7M50 |
| C 152 | | CFTNA224J50 |
| C 153 | | CKSRYB103K50 |
| C 154 | | CKSRYB103K50 |
| C 155 | | CFTNA273J50 |
| C 161 | | CKSRYB272K50 |
| C 162 | | CKSRYB103K50 |
| C 163 | | CKSRYB103K50 |
| C 164 | | CKSRYB272K50 |
| C 165 | | CKSRYB272K50 |
| C 166 | | CKSRYB103K50 |
| C 167 | | CKSRYB103K50 |
| C 168 | | CFTNA223J50 |
| C 201 | (B,272,46) | CKSQYB102K50 |
| C 202 | (B,279,46) | CKSQYB102K50 |
| C 203 | (B,272,44) | CKSQYB103K50 |
| C 204 | (B,279,48) | CKSQYB103K50 |
| C 205 | (B,278,61) | CKSQYB103K50 |
| C 206 | (B,276,61) | CKSQYB102K50 |
| C 211 | (B,259,50) | CCSRCH471J50 |
| C 212 | (A,262,50) | CEAT100M50 |
| C 213 | (A,263,56) | CKSRYB103K50 |
| C 214 | (A,262,67) | CKSRYB272K50 |
| C 215 | (A,259,67) | CKSRYB272K50 |

| Circuit Symbol and No. | | | Part No. |
|---|---|---|---|
| C 216 | (A,256,66) | | CKSRYB103K50 |
| C 217 | (A,252,69) | | CKSRYB104K50 |
| C 219 | (B,249,59) | | CKSQYB103K50 |
| C 221 | (A,269,50) | | CEAT100M50 |
| C 222 | (A,272,59) | | CKSRYB272K50 |
| C 223 | (A,272,56) | | CKSRYB103K50 |
| C 224 | (A,268,66) | | CKSRYB103K50 |
| C 225 | (B,249,50) | | CKSQYB102K50 |
| C 226 | (B,249,48) | | CKSQYB103K50 |
| C 227 | (B,244,64) | | CKSQYB103K50 |
| C 228 | (B,244,62) | | CKSQYB102K50 |
| C 229 | (B,221,59) | | CKSQYB105K16 |
| C 230 | (B,248,45) | | CKSQYB103K50 |
| C 241 | (A,227,48) | | CKSQYB102K50 |
| C 242 | (A,232,48) | | CKSQYB102K50 |
| C 243 | (A,224,55) | | CKSRYB473K50 |
| C 244 | (A,228,55) | | CKSRYB103K50 |
| C 245 | (A,227,68) | | CKSRYB103K50 |
| C 246 | (A,224,66) | | CKSRYB473K50 |
| C 301 | (A,240,94) | | CEAT1R0M50 |
| C 302 | (A,256,90) | | CFTNA104J50 |
| C 303 | (A,250,93) | | CEAT100M50 |
| C 304 | (A,235,89) | | CEAT100M50 |
| C 305 | (A,245,89) | | CEAT100M50 |
| C 306 | (A,262,93) | | CEAT100M50 |
| C 307 | (A,240,101) | | CEATR22M50 |
| C 308 | (A,268,93) | | CEAT1R0M50 |
| C 309 | (A,274,98) | | CEAT1R0M50 |
| C 310 | (A,274,104) | | CEAT100M50 |
| C 311 | (A,274,111) | | CEATR47M50 |
| C 312 | (A,268,108) | | CKSRYB332K50 |
| C 313 | (A,245,110) | | CKSRYB103K50 |
| C 314 | (A,239,109) | | CEAT101M25 |
| C 315 | (B,279,113) | | CKSRYB223K50 |
| C 316 | (A,268,109) | | CKSRYB332K50 |
| C 317 | (A,268,112) | | CKSRYB104K50 |
| C 318 | (A,255,120) | | CKSRYB332K50 |
| C 319 | (A,239,118) | | CEAT101M50 |
| C 320 | (A,255,122) | | CKSRYB224K16 |
| C 321 | (A,251,122) | | CKSRYB332K50 |
| C 322 | (A,248,122) | | CKSRYB473K50 |
| C 323 | (B,271,118) | | CKSRYB473K50 |
| C 324 | (B,211,118) | | CCSRCH101J50 |
| C 325 | (B,281,120) | | CCSRCH101J50 |
| C 326 | (A,198,120) | | CFTNA223J50 |
| C 327 | (A,274,122) | | CFTNA223J50 |
| C 328 | (B,210,162) | | CKSRYB224K16 |
| C 329 | (A,223,168) | | CFTNA104J2A |
| C 330 | (A,274,171) | | CFTNA104J2A |
| C 331 | (B,287,157) | | CKSRYB224K16 |
| C 332 | (B,217,167) | | CKSRYB682K50 |
| C 333 | (B,271,169) | | CKSRYB103K50 |
| C 334 | (A,233,159) | 1 µF/250 V | CCE1035 |
| C 335 | (A,233,166) | 1 µF/250 V | CCE1035 |
| C 336 | (A,268,158) | 100 µF/100 V | CEHAZL101M2A(P45) |
| C 337 | (A,204,158) | | CFTNA104J2A |
| C 338 | (A,277,158) | | CFTNA104J2A |
| C 339 | (A,196,158) | 100 µF/100 V | CEHAZL101M2A(P45) |
| C 340 | (A,244,160) | | CQMBA561J2A |
| C 341 | (A,259,136) | 4.7 µF/250 V | CCE1036 |

| Circuit Symbol and No. | | | Part No. |
|---|---|---|---|
| C 342 | (A,189,57) | 10 µF/100 V | CEAT100M2A |
| C 343 | (A,199,57) | 10 µF/100 V | CEAT100M2A |
| C 344 | (A,193,39) | | CFTNA103J50 |
| C 345 | (A,170,49) | | CFTNA103J50 |
| C 346 | (B,224,48) | | CKSQYB103K50 |
| C 347 | (A,170,44) | | CFTNA103J50 |
| C 348 | (B,226,48) | | CKSQYB102K50 |
| C 401 | (A,187,94) | | CEANP221M10 |
| C 402 | (A,159,106) | | CEAT220M50 |
| C 403 | (A,228,89) | | CEAT100M50 |
| C 404 | (A,201,96) | | CFTNA104J2A |
| C 405 | (A,202,105) | | CEANP4R7M50 |
| C 431 | (A,160,99) | | CEAT220M50 |
| C 432 | (B,155,87) | | CKSRYB103K50 |
| C 433 | (A,145,91) | | CKSRYB103K50 |
| C 434 | (A,150,106) | | CEANP1R0M50 |
| C 435 | (A,150,99) | | CEAT470M35 |
| C 441 | (A,286,105) | | CEAT100M50 |
| C 451 | (A,166,97) | | CKSRYB103K50 |
| C 452 | (A,155,91) | | CKSRYB103K50 |
| C 453 | (A,169,90) | | CEAT100M50 |
| C 511 | (B,249,62) | | CKSQYB102K50 |
| C 601 | (A,159,171) | | CFTNA104J50 |
| C 602 | (A,155,171) | | CFTNA104J50 |
| C 603 | (B,90,159) | | CKSRYB103K50 |
| C 604 | (B,104,172) | | CKSRYB103K50 |
| C 605 | (A,88,159) | | CEAT470M35 |
| C 606 | (A,102,171) | | CEAT470M35 |
| C 607 | (B,83,167) | | CKSRYB103K50 |
| C 608 | (B,90,167) | | CKSRYB103K50 |
| C 609 | (A,88,167) | | CEAT470M35 |
| C 610 | (A,94,167) | | CEAT470M35 |
| C 611 | (A,182,126) | | CFTNA104J2A |
| C 612 | (A,165,152) | | CFTNA104J2A |
| C 613 | (A,129,126) | 3 300 µF/71 V | CCH1703 |
| C 614 | (A,113,152) | 3 300 µF/71 V | CCH1703 |
| C 615 | (A,162,126) | 3 300 µF/71 V | CCH1703 |
| C 616 | (A,145,152) | 3 300 µF/71 V | CCH1703 |
| C 617 | (A,77,138) | | CQMA102K2E |
| C 618 | (A,54,138) | | CQMA102K2E |
| C 619 | (A,72,138) | | CQMA102K2E |
| C 801 | | | CKSQYB104K50 |
| C 901 | (A,81,72) | 6 800 µF/16 V | CCH1468 |
| C 902 | (A,81,54) | 6 800 µF/16 V | CCH1468 |
| C 903 | (A,30,60) | | CQMA472J50 |
| C 904 | (A,32,127) | | CQMA472J50 |
| C 906 | (A,125,102) | | CFTNA103J2A |
| C 907 | (B,119,103) | | CKSRYB104K50 |
| C 908 | (A,106,83) | | CEAT101M16 |
| C 909 | (B,111,86) | | CKSRYB103K50 |
| C 910 | (A,125,93) | | CEAT2R2M50 |
| C 911 | (A,123,83) | | CEANP221M10 |
| C 912 | (B,115,85) | | CKSRYB102K50 |
| C 913 | (B,117,85) | | CKSRYB472K50 |
| C 914 | (A,117,77) | | CEAT100M50 |
| C 915 | (B,112,67) | | CKSRYB103K50 |
| C 916 | (B,107,67) | | CKSRYB103K50 |
| C 917 | (A,233,95) | | CKSQYB104K50 |
| C 918 | (A,140,58) | | CEAT471M25 |
| C 919 | (A,117,69) | | CEAT220M50 |

| Circuit Symbol and No. | | Part No. |
|---|---|---|
| C 920 | (A,106,67) | CKSRYB103K50 |
| C 921 | (A,123,69) | CEAT220M50 |
| C 922 | (B,105,56) | CKSRYB103K50 |
| C 923 | (A,103,58) | CEAT101M16 |
| C 924 | (B,108,58) | CKSRYB103K50 |
| C 925 | (B,110,51) | CKSRYB223K50 |
| C 926 | (A,112,49) | CEAT100M50 |
| C 927 | (B,117,49) | CKSRYB223K50 |
| C 928 | (A,119,49) | CEAT100M50 |
| C 929 | (B,139,46) | CKSRYB105K10 |
| C 930 | (B,71,51) | CKSQYB103K50 |
| C 931 | (B,131,43) | CKSRYB103K50 |
| C 932 | (A,90,47) | CKSQYB102K50 |
| C 933 | (B,125,43) | CKSQYB102K50 |
| C 934 | (A,90,44) | CKSQYB103K50 |
| C 935 | (B,123,43) | CKSQYB103K50 |
| C 936 | (A,90,42) | CKSQYB104K50 |
| C 937 | (B,120,43) | CKSQYB104K50 |

**D**

## Unit Number : CWM9848
## Unit Name : Remote Control Unit

### MISCELLANEOUS

| | | |
|---|---|---|
| Q 1351 | (B,21,23) Transistor | DTC114EU |
| Q 1352 | (B,22,6) Transistor | DTC114EU |
| D 1351 | (B,12,25) Diode | DAN202U |
| D 1352 | (B,16,6) Diode | DAN202U |
| D 1366 | (B,21,11) Diode | UDZS16(B) |
| D 1367 | (B,29,16) Diode | UDZS16(B) |
| S 1351 | (A,6,11) Switch(BASS BOOST) | CSD1128 |

### RESISTORS

| | | |
|---|---|---|
| R 1351 | (B,15,16) | RS1/16S103J |
| R 1352 | (B,18,18) | RS1/16S102J |
| R 1353 | (B,31,21) | RS1/16S103J |
| R 1354 | (B,31,16) | RS1/16S102J |
| R 1359 | (B,16,8) | RS1/16S102J |